22-H012

ビジネスデータ品質に関する調査研究
「エンジニアリング情報のデータ品質に関する調査研究」
報告書

平成 23 年 3 月

財団法人　日本情報処理開発協会

KEIRIN

この事業は、競輪の補助金を受けて実施したものです。
http://ringring-keirin.jp

まえがき

本報告書は、財団法人日本情報処理開発協会が競輪の補助金を受けて実施した平成 22 年度情報化推進に関する調査研究等補助事業「企業間情報連携の推進に関する調査研究」事業の一環である「ビジネスデータ品質に関する調査研究」に基づく「エンジニアリング情報のデータ品質に関する調査研究」の成果を取りまとめたものである。

デジタルエンジニアリングツール（CAD/CAM/CAE/CG など）の活用の増加がフロントローディングの推進、詳細設計段階の協調開発促進などを可能にし、製品開発期間短縮に寄与しているが、一方で製品データ品質（PDQ：Product Data Quality）の問題が顕在化してきた。低品質データは効率的な協調開発の弊害であり、エンジニアリング IT システムへの投資効果を減ずる。したがって、この問題の解決は必須である。製造業が取り扱うエンジニアリングデータの品質基準の枠組みを標準化して、経済ロスを減少させることにより、日本企業の国際連携ビジネス活動にも寄与できる。

（財）日本情報処理開発協会では、経済産業省からの委託を受けて、3 次元形状データの品質規格の開発を、2005 年 3 月に ISO TC184/SC4 に提案して承認され、全製造業共通に適用できる ISO 10303-59（Quality of product shape data：通称 PDQ-S）を開発して、2008 年 10 月に IS（International Standard）として発行された。

IS 発行を契機として、日本を含む世界 5 ヶ国の自動車工業会が参加する標準化推進組織の SASIG（Strategic Automotive product data Standards Industry Group）は、自らが開発して運用している PDQ ガイドラインの形状対応部分の規定の後継として、10303-59 の採用を決定した。また、世界の航空機業界と自動車業界が共同で開発を開始した ISO 10303-242 の中でも採用されることになった。しかし、この課題の解決は製造業界全体に共通に貢献するものであるため、対象範囲の拡大に関してあらためて日本の製造業界のニーズを把握し、国際標準化にふさわしい対象を選択して、並行して当協会に設置された製品データ品質の国際規格開発プロジェクトに入力することを目的として、平成２１年度に続いて平成２２年度の活動を行った。

本報告書は、以上の経緯を記述するとともに、関連資料を提示するものである。

平成２３年３月

財団法人日本情報処理開発協会

目　次

目　次 3

1.　事業の目的 1

2.　事業の進め方 2

2.1　実施体制 2
2.2　目標 3

3.　PDQ 国際標準化要件検討委員会の活動結果 4

3.1　第 1 回委員会（6 月 2 日、議事録 PDQR10-02-01） 4
3.2　第 2 回委員会（7 月 28 日、議事録 PDQR10-03-01） 4
3.3　第 3 回委員会（9 月 16 日、議事録 PDQR10-04-01） 5
3.4　第 4 回委員会（12 月 14 日、議事録 PDQR10-05-01） 5
3.5　第 5 回委員会（2 月 16 日、議事録 PDQR11-01-01） 6

付録 1.　委員会の議事録
付録 2.　委員会の配付資料

1. 事業の目的

デジタルエンジニアリングツール（CAD/CAM/CAE/CG など）の活用の増加がフロントローディングの推進、詳細設計段階の協調開発促進などを可能にし、製品開発期間短縮に寄与しているが、製品データ品質（PDQ：Product Data Quality）の問題が顕在化してきた。低品質データは効率的な協調開発の弊害であり、エンジニアリング IT システムへの投資効果を減ずる。したがって、この問題の解決は必須である。製造業が取り扱うエンジニアリングデータの品質基準の枠組みを標準化して、経済ロスを減少させることにより、日本企業の国際連携ビジネス活動にも寄与できる。

IT 化が先行している自動車産業では、業界を挙げて（日本を含む世界主要 5 ヶ国の自動車工業会の標準化推進組織である SASIG: Strategic Automotive product data Standards Industry Group が主導）この問題にいち早く取り組み、PDQ ガイドラインという、3 次元形状データなどの品質評価の基準を作成し、日本では（社）日本自動車工業会（JAMA）と（社）日本自動車部品工業会（JAPIA）が共同で運用している。このような品質評価基準は、交換されるデータの品質に対する要求やクレームの根拠となり、また、データを作成する設計者やシステムにも客観的な評価結果を与えるので、品質向上に大きな効果をもつ。

しかし、従来のガイドラインは自然言語によって記述されており、これに準拠しているとされる 2 個以上の PDQ チェックツールを同一データに適用すると異なる結果が得られるなど、信頼性に関わる問題がある。(財）日本情報処理開発協会では、いろいろな製造業界のニーズが自動車業界と共通であることが想定されたため、経済産業省からの委託を受けて、自動車業界の PDQ ガイドラインの形状対応部分を参考にして、それぞれの項目の厳密な評価基準とチェック結果の報告の仕様を計算機言語で定義して曖昧性を排除する規格の開発を、2005 年 3 月に ISO TC184/SC4 に提案して承認され、全製造業共通に適用できる ISO 10303-59（Quality of product shape data：通称 PDQ-S）を開発して、2008 年 10 月に IS（International Standard）として発行された。

IS 発行を契機として、SASIG/JAMA/JAPIA では、PDQ ガイドラインの形状対応部分の規定の後継として、10303-59 の採用を決定した。さらに TC184/SC4/JNC（TC184/SC4 対応の国内委員会の略称で、当協会が事務局を担当している）と SASIG が連携して、3 次元形状データ以外に適用範囲を拡大したデータ品質規格を TC184/SC4 に提案することが合意された。また、世界の航空機業界と自動車業界が共同で開発を開始した ISO 10303-242 の中でも採用されることになった。この課題の解決は製造業界全体に共通に貢献するものであるため、あらためて日本の製造業界のニーズを把握して、国際標準化にふさわしい対象を選択し、並行して当協会に設置された製品データ品質の国際規格開発プロジェクトに入力することを目的として活動を行った。

2. 事業の進め方

製品データ品質が問題となる産業界（主として製造業界）の業界団体から推薦された技術者と、この活動の成果に基づいて新しい PDQ 規格を開発するために別途設置する PDQ 規格開発委員会のメンバ（全員が発行済みの ISO 10303-59 の開発メンバ）を委員とする、PDQ 国際標準化要件検討委員会を設置して、新しい規格を開発するための要件を検討する。

2.1 実施体制

(1) 管理体制

財団法人日本情報処理開発協会
会長　牧野　力

電子情報利活用推進センター
センター長（当協会常務理事）　兼谷　明男

(2) 調査研究体制

電子情報利活用推進センター
センター長（当協会常務理事）　兼谷　明男

PDQ 国際標準化要件検討委員会
委員長　大高　哲彦（日本ユニシス）

(3) PDQ 国際標準化要件検討委員会の構成

番号	氏　名	勤務先及び役職名	備考
1	大高　哲彦 (委員長)	日本ユニシス株式会社　上席スペシャリスト	ISO TC184/SC4 専門家 10303-59 エディタ
2	平岡　弘之	中央大学　理工学部精密機械工学科　教授	ISO TC184/SC4 専門家 10303-59 プロジェクトリーダ
3	菊地　慶仁	北海学園大学　工学部電子情報工学科　教授	ISO TC184/SC4 専門家 10303-59 開発メンバ
4	小林　一也	富山県立大学　工学部機械システム工学科 准教授	ISO TC184/SC4 専門家 10303-59 開発メンバ
5	田中　文基	北海道大学　大学院情報科学研究科　准教授	ISO TC184/SC4 専門家 10303-59 開発メンバ
6	相馬　淳人	株式会社エリジオン　取締役最高技術責任者	ISO TC184/SC4 専門家 10303-59 開発メンバ

7	坂本　千秋	有限会社設計生産工学研究所　代表取締役	(社)日本工作機械工業会代表 ISO TC184/SC4 専門家
8	石川　義明	有限会社設計生産工学研究所　取締役	ISO TC184/SC4 専門家
9	田中　敬昌	デジタルプロセス株式会社　次長	(社)日本自動車工業会代表
10	多賀　和春	ホンダエンジニアリング株式会社　技術主任	(社)日本自動車工業会代表
11	小形　充生	スタンレー電気株式会社　課責長	(社)日本自動車部品工業会代表
12	岩壁　清行	社団法人日本金型工業会東部支部 技術委員会委員	(社)日本金型工業会東部支部代表
13	松永　三夫	株式会社日立製作所　主任技師	(社)電子情報技術産業協会代表
14	三富　一弘	三菱重工業株式会社　主席チーム統括	(社)日本航空宇宙工業会代表
オブザーバ	土橋　俊夫	社団法人日本航空宇宙工業会　部長	(社)日本航空宇宙工業会代表
事務局	鈴木　勝	財団法人日本情報処理開発協会 電子情報利活用推進センター　主席研究員	

2.2 目標

産業界の代表委員に実業務で遭遇しているデータ品質問題を列挙してもらい、規格開発担当委員がその解決策を検討する。解決の優先度と実現可能性、および国際規格で対応することの妥当性を勘案して、短期目標と中長期目標を設定し、短期目標については、規格開発委員会が提示する仕様案に対してコメントし、開発作業を支援する。一方、中長期目標については、多くの産業界が重要と考える項目を優先的に取り上げ、将来の規格化を実現させるために、要件を明確にしていく。

3. PDQ 国際標準化要件検討委員会の活動結果

3.1 第 1 回委員会（6 月 2 日、議事録 PDQR10-02-01）

⑴ 委員と実施計画書の紹介

昨年度はオブザーバ参加であった二つの工業会（(社)電子情報技術産業協会、(社)日本航空宇宙工業会）が、今年度から代表委員を派遣してくれることになった。

⑵ 新 PDQ 規格開発状況の報告

新 PDQ 規格の NWI 投票が開始されたが、各国への根回しの結果、8 ヶ国（米、仏、独、ノルウェー、スペイン、ポルトガル、韓国、日本）からの expert 登録が見込まれる。翌週に開催される ISO TC184/SC4/Bethlehem 会議用に作成した各種資料を説明して、各工業会の立場からのコメントを依頼した。

⑶ 新 PDQ 規格の技術内容の説明

現在予定している開発項目の要点を説明した。それに関連する各工業会の活動が紹介されて、開発の必要性の議論が行われた。

⑷ ビジネス条件依存項目の実現方法説明

SASIG PDQ Guidelines に含まれていて 10303-59 には含めなかったビジネス条件依存項目を拡張機能として検討している。JAMA/JAPIA の代表委員から、SASIG PDQ Guidelines の quality stamp に相当する機能の実現が要望された。

3.2 第 2 回委員会（7 月 28 日、議事録 PDQR10-03-01）

⑴ 長期データ保存について

LOTAR Executive Summary の内容をかいつまんで紹介した。LOTAR が意図しているのは"Recommended Practices"を出すことであるが、ある部分は拘束条件となるような国際標準規格になることを望んでおり、我々と連携することがよいと考えている。これに対して、2 月に各委員から出された質問をとりまとめて、LOTAR の Co-chair である Boeing 社の Mr. Zuray に送付した結果、3 月上旬に送られてきた回答の内容を紹介した。

⑵ PDQ 拡張機能の技術概要紹介

Bethlehem 会議での報告に対する海外専門家の意見を紹介した。今後それらを考慮して、具体的な開発内容を検討していく。とくに GD&T への取り組みを強く要望されたので、検討を開始した。GD&T のニーズを持っている世界の自動車業界／航空機業界／防衛関係と連携できることは重要である。

⑶ ビジネス条件依存項目の実現方法説明

Bethlehem 会議では国際規格化になじむのかと指摘されたので、実現方法とメリットを説明して一応の了解は得たが、次回の会議でさらに説明することになっている。

⑷ GD&T の検討資料紹介

Bethlehem 会議後に、NIST の GD&T 検討プロジェクト（DoD の依頼）に参加している米国の Doug Cheney と交流して GD&T エラー事例の資料を入手し、それに対して PDQ 規格開発委員が検討した結果を紹介した。規格開発側の所感としては、入手資料の内容はあまりに末端のレベルで、上位構造が分からない。皆さんにも資料を見てもらって、意見を出してもらいたい。

3.3 第 3 回委員会（9 月 16 日、議事録 PDQR10-04-01）

⑴ GD&T エラー事例の改訂版と日本側の整理資料の紹介

Doug Cheney から入手した改訂版では誤りと正解が提示されているが、必要な幾何公差がすべては表示されていないものがあり、正解が理解できないものもある。今回の我々の整理の目的は、コンピュータプログラムでどういうアルゴリズムを組めば自動的にチェックできるかを考えるためである。このの資料は米国 DoD の要件として書かれているが、そのための特異性がないか、また SASIG/JAMA の DEV とどこが異なるのかを教えてほしい。JAMA の 3D 図面の担当者にこの資料を見せて、自動車業界の要件を聞きたい。→10 月 8 日に JAMA の関係者との意見交換会が実施された。

⑵ SASIG 3D Annotated Model Standard の紹介

この資料は米国の AIAG が作成したが、JAMA の数社が出した要件をとりまとめたものである。従来 2D で表現していたものを 3D に移行するためには、どうすればよいかをまとめている。ビューアと CAD のベンダには、それぞれに関連する部分を抜き出して要件として出しており、まだ実現できていないことがほとんどである。ISO 16792 でできることは 16792 参照と書くことによって整合を図っているが、それ以外に 16792 に対する要望がある。この資料を理解するためには 16792 の知識が必須で、それ以外に JAMA の要望を加えたものが全体になる。

⑶ 3D 図面独自の PDQ 項目候補例

これはビューア用に変換されたデータに関する考察である。単純に図面としてみた場合の問題と、データを活用する際の問題の両方が含まれている。変換前の元データと比較して分かるもので、比較プログラムの開発者にこれらをチェックできるようにという要件である。

3.4 第 4 回委員会（12 月 14 日、議事録 PDQR10-05-01）

⑴ TC184/SC4/Vico Equense 会議での Doug Cheney からの入手資料紹介

生産準備用データの品質チェック項目案が提示された。これは米国 DoD の装備品における要件を示しているが、生産準備は非常に範囲が広く、各社のノウハウが含まれているので、標準化になじむのか疑問である。

また、GD&T の minimum set 案が提示された。PDQ 規格開発委員会での検討資料とともに配布するので、各工業会の立場から妥当性を評価してもらいたい。

⑵ GD&T に関する航空宇宙業界の状況紹介

Quality check の有効性には、特定のデータに注目した品質と、フォーマット変換での再現性の品質の両方がある。航空機業界の機体データは CATIA に統一されているので、前者の場合よ

りも、何らかの理由でフォーマット変換が必要になる後者の場合に品質チェックが役に立つ。

一方、設計側の CAD を統一しても、解析や生産技術にデータを渡す際には変換が必要になることがあるが、変換で出る問題が設計に起因することもある。また、設計側では十分に問題をチェックできないので、後工程から指摘されるのを期待している面もある。

(3) JEITA における PMI/GD&T 検討状況紹介

① 3D 単独図ガイドラインの改訂

JAMA/JAPIA の 3D 単独図ガイドラインを引き継いで、JAMA/JAPIA とも相談しながら JEITA 用に改訂している。JEITA ではアセンブリ関係が 3 次元データの中で一番広範囲に使われているので、その関連の情報を充実させている。

② 3 次元データ活用分科会活動

金型データ連携は、補助資料がなくても 3D 単独図データだけで渡せるようにするための検討であるが、金型工業会からはノウハウのデータは入れないように求められている。

③ 幾何公差推進分科会（仮称）の立上げ

日本の電気業界では、幾何公差に関して独立の原則を採用しているが、市販のツールでは ASME 系のテーラーの原理が優勢であり、TC213 もテーラーの原理を採用している。将来的にはこの活動の成果を、3D 単独図ガイドラインに盛り込む。

(4) GD&T data の“データ品質検査”規格に関する初期検討

米国のプロジェクトから入手した GD&T エラーの資料が個別の事例から出発しているので、もう少し別の整理をしたいと思って作成した。10303-59 から継承する Erroneous/Inappropriate の分類との対応はまだ明確ではない。現在の CAD の幾何公差は曖昧であるため、両者の区別が難しい。

3.5 第 5 回委員会（2 月 16 日、議事録 PDQR11-01-01）

(1) GD&T に関する各工業会の反応

これまでの JAMA/JAPIA との打合せでは、時期尚早と言われている。一方、JEITA の幾何公差推進分科会の立ち上げは 4 月になる。電気業界を中心として、寸法公差方式から幾何公差方式への移行を数年計画で進める予定で、まずそのための教育から始める。

(2) PDQ 拡張規格開発の状況

① 8000-311 の概要

現段階の文書構成を提示し、一部の内容の材料提供について本委員会の委員に協力を依頼した。

② Non-shape data quality の取り扱い

SASIG PDQ Guidelines にある非形状データ品質項目を取り扱う。以前に多賀委員から提示された資料で、3 社以上で利用されているという項目が対象であるが、あとで追加可能な仕組みになっている。ユーザ間で取り決めた非形状データの条件の仕様書を、外部文書としてデータモデルから参照できるようにする。

③ PDQ 拡張規格のデータモデル案

GD&T を形状とは別のスキーマとして 10303-59 に追加するので、edition 2 では従来のタイトル（Quality of product shape data）を変更する予定である。

④ GD&T quality の整理

2 月末を目標に、GD&T エラーの分類を見直す。現在挙げられている項目は、十分ではないがコアになる項目だということが NIST のプロジェクトで合意されており、LOTAR プロジェクトも認めると思われる。これらは初期セットなので、各工業会でコメントがあれば遅くとも 6 月までに出してほしい。

⑤ 離散化データ品質

CAE メッシュデータや測定データの品質は先送りする。

⑥ Manufacturing に関する Doug Cheney の提案項目

各委員が中核となる項目とは思わないので、これらは取り上げない。

(3) JAMA/JAPIA から PDQ 国際標準化開発委員会への意見

我々の開発プロジェクトが取り扱うのは GD&T データの品質であって、GD&T データそのものを定義するものではないが、本日の資料で要望されている内容はほとんどが後者に対するものであり、むしろ TC184/SC4 の AP242 開発チームに要望を出してほしい。

(4) GD&T data quality に関する調査・検討

本日石川委員から提示された資料はまだ作業中のものであるが、criterion を書く人に役立つので、2 月末までに完成させてほしい。また、田中敬昌委員から、AP242 では TC213 の規格をどこまで追跡しているのかを、プロジェクトリーダの Max Ungerer に確認してほしい。

(5) 今後について

委員会は今回が最後であるが、メーリングリストは残すので、規格開発に関する情報交換が可能である。

付録 1.　委員会の議事録

平成 22 年度　第 1 回 PDQ 国際標準化要件検討委員会　議事録

日　時：6 月 2 日(水)　14 時－17 時
場　所：機械振興会館 4 階　JIPDEC 第 4 会議室
出席者：委員長　大高哲彦(NUL)
委員　平岡弘之(中央大)、菊地慶仁(北海学園大)、小林一也(富山県立大)、田中文基(北海道大)、坂本千秋(MER)、石川義明(MER)、田中敬昌(DIPRO)、多賀和春(ホンダ)、小形充生(スタンレー電気)、松永三夫(日立)、三富一弘(MHI)
事務局　鈴木　勝(JIPDEC/DUPC)
（順不同、敬称略）　13 名

配布資料：
- PDQR10-01-01：平成 22 年度 PDQ 国際標準化要件検討委員会　委員名簿
- PDQR10-01-02：平成 22 年度 PDQ 国際標準化要件検討委員会　実施計画書
- PDQR10-01-03：平成 21 年度第 5 回 PDQ 国際標準化要件検討委員会　議事録
- PDQR10-01-04：Status of PDQ Standard Extension（大高）
- PDQR10-01-05：Expected contents of ISO 10303-59 Edition-2（平岡）
- PDQR10-01-06：Expected contents of ISO 8000-311（相馬）
- PDQR10-01-07：Technical Considerations on PDQ-S Extension（大高）
- PDQR10-01-08：Business-condition-oriented data quality criteria（平岡）

議　事：

1.　配付資料の確認（事務局）
- 本年度第 1 回目のため、委員名簿と実施計画書を配布する。

2.　はじめに（大高委員長）
- 前回までは、規格開発委員会の検討状況があまり説明できていなかったが、今回の資料でかなり詳しく説明する。
- 来週の SC4/Bethlehem 会議の Open Technical Forum（OTF）のテーマは"Processes for ensuring data quality"であり、日本から自分が PDQR10-01-04 を発表し、相馬さんが自社の 3 次元データの validation technology について発表する。
- PDQR10-01-05～-07 は公開してよい資料なので、工業会の中での検討に使ってください。
- PDQR10-01-08 は、多賀さんの資料にあった PDQ ガイドラインの未対応の重要項目をなるべく取り込むための仕組みである。これにより新 PDQ 規格では、SASIG PDQ Guidelines の中で残っていた FEM データ、測定データおよびビジネス条件依存項目を取り上げるので、あと残っているのは quality stamp くらいである。

3.　Status of PDQ Standard Extension（大高、PDQR10-01-04）
- Drawing は取り上げない。
- 新 PDQ 規格の NWI 投票が開始されたが、各国への根回しの結果、8 ヶ国（米、仏、独、ノルウェー、スペイン、ポルトガル、韓国、日本）からの expert 登録が見込まれる。
- Appendix の内容を小形さんにチェックしてもらいたい。

(小形)データを受け取ってから使うまでには必ず何らかのデータ変換が発生するが、それをどのように運用するかが重要である。
→(大高)データ変換の詳細な記録を残す必要がある。
→(小形)データ授受ではお互いにデータの品質を把握しておく必要があり、データを提供する側もデータの品質を明確にし、データと一緒に受領側に渡すべきである。また、PDQ-S 規格に準拠すれば、両者の結果の差が少なくなることを期待しているが、その際の違いが認識できるようにすることが重要である。
(菊地)スライド 12 の A13 の上から出力線が出ているのは IDEF0 図としてはおかしい。そのほかに本日出た改善意見を反映した改訂版を送る（6/3 に配布された）。

4.　10303-59 ed2 の概要（平岡、PDQR10-01-05）
(大高)Assembly/Parametrics については、SASIG PDQ Guidelines ではこれらの有無しか取り上げていないが、もっと技術的なレベルでの品質を取り上げる必要がある。
(大高→田中敬昌)PDQ-S モジュールはほぼできているので、AP242 ですぐに使える。

5.　8000-311 の概要（相馬委員欠席のため大高委員長が紹介、PDQR09-05-06）
- JAMA/JAPIA の皆さんには、この内容で役に立つかを判断していただきたい。

(田中敬昌)これに従ってベンダが実装してくれるのなら役立つ。

6.　新 PDQ 規格の技術内容の説明（大高、PDQR09-05-07）
- ここで取り扱う測定データとは、製品全体を覆うような点群データのことである。
- メッシュデータの品質を取り扱うだけなので、解析データの品質を取り扱うとは言わない。
- 測定機にはノイズデータを除去する機能があるが、特別な目的のためのソフトウェア処理はあり得る。
- 必要と思われる機能を挙げてみたが、エンドユーザに近い委員の皆さんは、自社やそれぞれの工業会のニーズからみて足りない機能があれば言っていただきたい。

(小林)FDM のリソースモデルとして Part 42 の volume が使えないか。
→(大高)element data は作れるが、table が作れないので無理だと思う。
(松永)測定データについては JEITA でも検討を開始している。測定する現物と CAD データを比較する際の基準座標をどうとるべきか。通常両者の座標系は異なるので、基準座標の取り方で比較結果に違いが出ると思う。
→(大高)車全体を測定する場合の座標系は一意に決められるが、部品の測定ではそうはいかない。測定データにソフトウェア処理を加えると評価しづらいので、できるだけ生に近いデータを対象としたいが、その場合は座標系の選択の考慮が必要になるかもしれない。ノイズを除去した測定データの包絡体を作って合わせる方法がある。
→(松永)適切な評価結果を得るためには、CAD 側でどういう指示が必要かを知りたい。
→(大高)自動車の関係者からはそれについて聞いたことがない。
→(松永)精密機器は小さいものが多いので精度が問題になる。最良の測定機の精度は 0.02mm 程度である。
→(大高)自動車の方を調べてみるが、JEITA の見解をまとめて、次回くらいに教えてほしい。CAE データの場合はあまり厳密でなくてもよいが、測定データの方が要求は厳しい。
(小形)測定データの不具合が問題になる場合を知りたい。
→(大高)本日の資料に書いてある範囲で不十分か。
→(小形)自社で測定データと CAD データの比較を試みたことがあるが、あまりに大変なので、今は顧客に納品する際に決められた点だけの誤差を検査データとして出しているだけである。できた物を測定するとそのままでは CAD データと絶対基準が合わないので、金型の検査では一番直しにくい曲面の方を正として、その他の部分を直しているようだが、その過程でどのような問題が起きているのかは認識していない。
→(大高)自動車業界のユーザの要件では、作った金型の不備を手直しした部分を測定し、それを CAD データに反映させる機能は必須である。また、スタイルデザインにおいて測定点群データから曲面を生成するリバースエンジニアリングはどこでも行われている。新しい素材で変形特性がよく分からない場合は、試作のプレス金型で試し打ちしたものを測定して、CAD データとずれている部分の CAD データを修正する。
→(小形)それは成型の際に金型が変形するのか、あるいは成型品が変形しているのか。
→(大高)両方ある。分かっている素材で作った金型の挙動はよく分かっているが、分かっていない素材の場合は上記のような処理が必要である。同様のことは鋳造型でもいえる。
(小形)測定データの標準形式はあるのか。
→(松永)ドイツが主体になって ISO で標準化している。
→(大高)実際にはデファクト形式が多く使われている。
→(小形)以前に 3 次元測定機の点群データを CAD に取り込むのに苦労したことがある。
→(大高、松永)今はリバースエンジニアリングのよいツールがある。

(小形)滑らかな形状では、測定点にある程度間隔があっても問題は出ないが、形状の変化が激しい箇所では、測定点が離れているとまったく違う形状になることがある。
(大高)測定点群データからフィレットを推定するのはベンダの工夫のポイントであるが、キャラクタラインの抽出は無理である。

- 測定データについては今回初めて提示したので、各産業界の知見を元にして、今後改訂するためのコメントをメールで出して欲しい。
- 8000-300 については本日説明を省略する。資料にある 5 項目の要件の中で 5 番目以外のものを 8000-311 に入れる予定であるが、来週の SC4 会議の結果に依存する。
- Sketch/Feature/Parametrics は、SASIG PDQ Guidelines では非形状とされているが、我々は形状であると思っている。それぞれの取り扱い方針がこの資料に書かれている。
- Sketch の品質不具合が後工程に波及することはないので、我々の規格で取り扱う必要はない。
- Feature の品質は魅力的なテーマであるが、あまりに重いので取り上げない。
- Parametrics は、リソースモデルが完成しているので、その普及促進のためにも取り上げたい。
- Appendix は 8000-311 のどこかに入れるものであるが、PDQR10-01-04 で説明済みである。

(事務局)Parametrics は自動車業界ではよく使われていると聞いているが、航空機業界ではどうか。
→(三富)自分は詳しくないので調べておく。

7. ビジネス条件に依存する項目の実現方法（平岡、PDQR09-05-08）

- リソースモデルではなくて、アプリケーションモジュールで実現する（アプリケーションモジュールについて簡単に説明）。

(大高)STEP 規格の中で、航空機業界が開発した AP203 はモジュール化されているが、自動車業界が開発した AP214 はモジュール化されていない。後者をモジュール化して、この両者を AP242 としてまとめる動きがある。
(大高)PDQ-S の 5 個のスキーマの図を加えて説明した方がよい。
(小林)ID を指すだけでは、内容までは保証できない。
(小形)チェックの結果は quality stamp の方に反映されるのか。
→(大高)JAMA/JAPIA の quality stamp ではなくて、PDQ-S と同じ形式で出力される。それをどのように quality stamp にまとめるかは別の残された問題である。
→(小形)チェッカに対するプロファイルの形式を、得意先との品質チェック仕様の合意書として使えるようなフォームにして標準化できないか。またそのプロファイルの流通を、SASIG の ENGDAT と連携して運用できないか。
→(大高)あらためて要件を出してくれれば検討する。
(田中敬昌)quality stamp もこの仕組みで実現できないか。
→(大高)できるかもしれない。PDQ-S の inspection result には quality stamp を構成するためのデータは含まれているので、あとはそれをまとめるための管理情報があればよい。
→(田中文基)Part 59 では管理情報の仕組みを入れなかったが、PDQ-S モジュールには入っている。
→(田中敬昌)それなら、SASIG 関係者には quality stamp もできるといった方がよい。

8. 今後の進め方（事務局）

- **3/9 の委員会の議事録にあるように、PDQ ガイドライン適用の最新状況の紹介資料を多賀さんから提供していただく。**
- **3/12 に Mr. Zurey から入手した回答資料をメールで配布したままになっているが、次回の委員会で検討するので、内容を見ておいて欲しい。**

(大高)Boeing が提供してくれると言ってまだ入手していない資料を念押しする。

9. 次回の予定

- 日時：7 月 28 日(水)　14 時－17 時（田中敬昌委員は SASIG 会議出席のため欠席）
- 場所：機械振興会館 4 階　JIPDEC 第 3 会議室
- 議題：SC4/Bethlehem 会議の結果を反映させた規格開発内容
  長期データ保存の検討

以上

平成 22 年度　第 2 回 PDQ 国際標準化要件検討委員会　議事録

日　時：7 月 28 日(水)　14 時－17 時
場　所：機械振興会館 4 階　JIPDEC 第 3 会議室
出席者：委員長　大高哲彦(NUL)
委員　平岡弘之(中央大)、菊地慶仁(北海学園大)、小林一也(富山県立大)、相馬淳人(エリジオン)、石川義明(MER)、多賀和春(ホンダ)、小形充生(スタンレー電気)、岩壁清行(NDE)、松永三夫(日立)、三富一弘(MHI)
オブザーバ　土橋俊夫(SJAC)
事務局　鈴木　勝(JIPDEC/DUPC)
（順不同、敬称略）　13 名

配布資料：
- PDQR10-02-01：平成 22 年度第 1 回 PDQ 国際標準化要件検討委員会　議事録
- PDQR10-02-02：LOTAR Executive Summary
- PDQR10-02-03：Questions and Answers on LOTAR
- PDQR10-02-04：Technical Considerations on PDQ-S Extension（大高）
- PDQR10-02-05：Business-condition-oriented data quality criteria（平岡）
- PDQR10-02-06：Expected contents of ISO 8000-311（相馬）
- PDQR10-02-07：Status of PDQ Standard Extension（大高）
- PDQR10-02-08：A Validation Technology for 3D CAD Data（相馬）
- PDQR10-02-09：PMI Quality Validation（D. Cheney）
- PDQR10-02-10：Error Type of PMI Quality Validation（D. Cheney）
- PDQR10-02-11：PMI Quality Validation 検討（PDQ 規格開発委員）
- PDQR10-02-12：スタンレー電気宿題回答（小形）
- PDQR10-02-13：各 OEM PDQ 展開項目一覧（多賀）
- PDQR10-02-14：JAMA/JAPIA　PDQ タスク会議資料（多賀）

議　事：
1. 土橋オブザーバの紹介（事務局）
- SJAC のオブザーバであった野中さんの後任として会議に出席する。

2. 配付資料の確認（事務局）
- 経費節減のため、今回から配付資料はモノクロ印刷にする。別途電子ファイルを配布するので、カラーが必要な場合はそちらを利用する。

3. 長期データ保存について（大高委員長）
- 初めての人もいるので、LOTAR Executive Summary（PDQR10-02-02）の内容をかいつまんで紹介した。LOTAR が意図しているのは"Recommended Practices"を出すことであるが、ある部分は拘束条件となるような国際標準規格になることを望んでおり、我々と連携することがよいと考えている。
- これに対して、2 月に各委員から出された質問をとりまとめて、LOTAR の Co-chair である Boeing 社の Mr. Zuray に送付した結果、3 月上旬に送られてきた回答（PDQR10-02-03）の内容を紹介した。その後 LOTAR 内部の組織替えがあったために、回答の中で約束していた追加資料の送付がまだできていないようである。我々としてはさらに細かい技術レベルの資料を入手しないと具体的な検討はできない。

(松永)LOTAR の技術資料はどの程度まとまっているのか。JEITA の方で勉強会を立ち上げるので、紹介したい。
→(大高)彼らの規格の開発状況を見ると分かる。
→(事務局)発行済みの EN 規格は日本規格協会から購入できると思う。
→(石川)PDQR10-02-03 の中で引用されているいくつかの 9300 シリーズ規格は、PDQR10-02-02 の方にも載っている。SJAC が 9100 規格を欧米と共同開発したチャネルから入手方法が分か

らないか。
→(土橋)調べてみる。
→(大高)航空機業界の方で正式に入手できない資料があれば、こちらのチャネルから要望してみるので教えてほしい。規格開発の立場からは、Part 100 シリーズの技術規格を入手して見ると大体が分かる。
→(石川)ユーザの立場からは、Part 2（Requirements）や Part 3（Fundamentals and concepts）を見る必要がある。
→(大高)後ほどメールでよいから何が必要か提示してほしい。
→(事務局)会議後の調査により、ドイツの ProSTEP が次の URL http://www.prostep.org/de/projektgruppen/langzeitarchivierung-lotar/the-lotar-standard.html で EN 9300 シリーズ規格の開発状況を掲載しており、開発が進んでいるものについては、表紙と目次をダウンロードできることが分かった。また、入手希望の規格文書は(財)日本規格協会から購入できることを確認したので、これらの情報を委員各位に案内した。
(松永)JEITA では長期データ保存の課題を列挙しているが、解決方法はまだ検討していないので、規格文書の内容を調査して、解決策が含まれているか比較してみる。月 1 回の会合で検討を進めている。
(大高)自動車業界の検討はどうか。
→(小形)何のためにどういう情報を保存すべきかのマトリックスの明確化が必要であるが、あまり細かくなり過ぎると全体が見えなくなるので、コンパクトにまとめた上で、保存期間や手段を現実的に詰める必要がある。
(大高)航空機業界ではどうか。
→(三富)Boeing や Airbus はずっと進んでいるので、まずできている規格を調べたい。我々以上に苦労しているはずなので、大きな枠では取りこぼしはしていないと思う。

4. 新 PDQ 規格開発概要の紹介（大高委員長、PDQR10-02-07）
- 乗用車 1 台を計測すると約 1 千万点になる。
- Bethlehem 会議で“non shape data”は広すぎると言われたので、”non shape CAD data”に変更する。

5. PDQ 拡張機能の技術概要紹介（大高委員長、PDQR10-02-04）
- Bethlehem 会議では、流体解析への応用を考えると差分法は除外しない方がよいと言われたので宿題にした。さらに、FEM や測定データの分野では STEP はあまり使われていないので、取り組む場合はそれぞれの領域の主要なユーザ組織やベンダと連携して、その要望を取り入れる必要があると指摘された。
- GD&T では主として STEP が使われているため、取り組みを強く要望されたので、検討を開始した。GD&T のニーズを持っている世界の自動車業界/航空機業界/防衛関係と連携できることは重要である。
- Sketch/Feature はやらないという提案が同意され、一方、Parametrics については時期尚早と言われた。

(石川)Sketch/Feature は、SASIG PDQ Guidelines にも non geometric として挙げられているが、それを取り上げなくてもよいということか。
→(大高)やらなくてもよいというのは、STEP のデータモデルに準拠したデータの品質であって、SASIG PDQ Guidelines にあるものは”non shape CAD data”として取り上げるかもしれない。

6. スタンレー電気の宿題回答（小形委員、PDQR10-02-12）
(大高)シェル要素の裏表チェックは FEM システムでもやっている。
(平岡)スライド 3 の 3 種類のシナリオの違いは何か。
→(小形)1 番目は、STEP の Quality Stamp データが STEP ファイルの中にあると想定して、Viewer で Quality Stamp データだけを見られるようにする必要がある。2 番目と 3 番目の違いは、Quality Stamp データが CAD ファイルの内部にあるか外部にあるかの違いによる。CAD ファイルの内部にある場合は、STEP と同様に Viewew が必要と考える。
→(平岡)今の Part 59 では、Quality Stamp データは STEP と同一ファイルになる。

→(大高)Part 59 の Quality Stamp の内容は SASIG PDQ Guidelines よりも詳細である。
(相馬)ENGDAT とはどういうもので、どのくらい使われいるのか。
→(小形)標準的なデータを送付する場合の仕様で、ENGDAT Package の中に一連の関係するデータを入れ、そのインデックスとして ENGDAT Delivery Note を付けて、どういうデータが含まれているのかが示される。2005 年から JAMA の 14 社が運用することを宣言したが、まだ 1 社も使っていない。
→(大高)ENGDAT は欧州の ODETTE が中心になって作成した規格である。
→(相馬)元々の SASIG PDQ Guidelines の Quality Stamp は ENGDAT Package の中に入ることになっていたのか。
→(小形)そういう議論はあまりされていないと思う。ENGDAT は中身をあまり規定していない。

7. 8000-311 の内容紹介（相馬委員、PDQR10-02-06）
- この資料を WG13 で説明したが、理解できる人がいないため反応がなかった。
- 次回の SC4 会議までにもう少し詳細化する。

(大高)前回の委員会の議事録にあるように、エンドユーザの利用シナリオに沿った記述をしたいので、材料を多賀さんから提供していただきたい。

8. A Validation Technology for 3D CAD Data（相馬委員、PDQR10-02-08）
- Bethlehem 会議の Open Technical Forum で説明したもので、CATIA による 3D 単独図（形状/アセンブリ/PMI のデータを含む）を JT に変換した際の、再現性検査に関する考察である。

9. ビジネス条件依存項目の実現方法（平岡委員、PDQR10-02-05）
(多賀)Table 1 の元になった資料の改訂版ができたので、あとで紹介する（PDQR10-02-13）。
(大高)リソースでなくてモジュールで実現するという説明は、どちらでも同じだと言われないか。
→(平岡)リソースを組み合わせて、AP で使い易いレベルの要素（モジュール）として実現する。
(大高)Bethelehem 会議では、予想どおり国際規格化になじむのかと指摘されたので、実現方法とメリットを説明して一応の了解は得たが、次回の会議でさらに説明することになっている。
(小形)ビジネス条件による仕様は、自分の資料（PDQR10-02-12）のスライド 2 にある PDQ 仕様書に含められるのか。
→(大高)現在のところ形状については含まれるが、ビジネス条件依存項目は外部の文書になる。
→(小形)ユーザの立場からは、PDQ 仕様書に一緒に含まれないと使えない。
→(大高)検討する。
(石川)Figure 1 にビジネス条件依存項目と外部参照の構造を加えて書いた方がよい。

10. GD&T の検討資料紹介（大高委員長、PDQR10-02-09, -10, -11）
- Bethlehem 会議後に、NIST の GD&T 検討プロジェクト（DoD の依頼）に参加している米国の Doug Cheney と交流して PDQR10-02-09 と-10 を入手し、それに対して PDQ 規格開発委員が検討した結果が PDQR10-02-11 である。
- 規格開発側の所感としては、入手資料の内容はあまりに末端のレベルで、上位構造が分からない。皆さんにも資料を見てもらって、意見を出したもらいたい。

(小形)どういう検討をすればよいのか。
→(大高)たとえば、こういう列挙でよいのか、もっと重要な項目があるのか、もっと上位の構造や整理に仕方が必要なのか、などである。PDQR10-02-10 は先方による分類の一例であるが、我々開発メンバとしては、もう少し品質問題の全体がとらえられるような分類が必要と考えている。
(大高)この資料によると、対象形状すべてが feature になっていないとチェックできないが、現在の CAD ではそれは成り立たない。
(資料訂正)PDQR10-02-11 の最初の部分の凡例にある「形態」は「形体」の誤りである。
(岩壁)PDQR10-02-09 の前提は、CAD の feature の自動寸法付けの不具合の問題なのか。あるいは、正しく作られた CAD データを他の形式に変換した結果がおかしくなるということなのか。設計者の側ではこんな間違いはしない。
→(大高)GD&T データの授受で困っている問題と思われるので、後者かもしれない。岩壁さんの経験から、GD&T の問題の分類の軸を提示してほしい。

→(岩壁)3D 単独図が流通するようになったら、こんなことがいろいろ出てくると予想される。
(石川)SASIG PDQ Guidelines にある GD&T の項目はどのレベルまで考えられているのか。
→(多賀)こういうレベルまでは検討していない。
→(小形)CAD からビューアに変換する場合の問題を JAMA/JAPIA で検討した資料がある。
→(大高)3D 単独図におけるデータ品質で気になっていることを提示してほしい。
(松永)作成時の誤りは CAD のチェック機能で排除できるので、データ変換で生じる問題を対象にすればよい。PDQR10-02-09 は ASME 形式を基準にしているが、本来は ISO 形式を基準として検討する必要がある。
(大高)この資料の中で、CAD ではあり得ない項目と、データ変換で化ける可能性がある項目に分類するのはすぐにできる。
→(松永)個々の項目を分類してチェックするのは大変なので、CAD データと変換後のデータを比較し、違いをはっきりさせてチューニングするツールが役立つ。
→(大高)Part 59 では形状の品質問題を分類して階層構造化しているので、それと同様に GD&T の品質問題を整理したい。どういう分類の項目が多いかによって作業量が違ってくる。
→(松永)数値系の機能だけなら分類は必要ないが、PMI の機能になると別の分類が必要になるかもしれない。
→(大高)彼らがいう PMI は、設計定義段階で考慮できる範囲のことだけである。
(大高)3D 単独図の普及にとってまずい GD&T のデータ品質を摘出したい。
→(松永)宿題としては設計データのあるべき要件まで含まれるのか。
→(大高)まず GD&T に限定してよい。Doug Cheney とは有効な最小セットを定義することになっている。
(岩壁)金型工業会では JEITA と共同で 3D 単独図の活用検討会を発足させるところなので、その結果がまとまったら提供できる。
→(大高)1 年後までくらいには最小セットを固めたいので、それ以前に判断材料として第一版ができたらいただきたい。
(多賀)PDQR10-02-14 は、JAMA/JAPIA の長期保存プロジェクトに対する PDQ チームからの申し送り事項を検討したものであるが、GD&T データの予想される問題点を挙げている。
→(大高)PDQR10-02-11 の先頭にある A, B, C と似ている。
(大高)まず開発チームのコメントを Doug Cheney に提示するが、本日の議論を踏まえて、この委員会のメンバとしてコメントを出していただきたい。
→(松永)JEITA としては二ヶ月くらいで最初の回答を出したい。
→(三富)航空機業界の機体メーカでは CAD は CATIA で統一されているので、PMI や GD&T の件は独自のコメントがあるか疑問であるが、次回までには何らかの回答をしたい。

11. 各 OEM の PDQ 展開項目一覧の改訂版（多賀委員、PDQR10-02-13）

- これとは別に、PDQ-S を採用した PDQ ガイドライン V5.1 の実装についてツールベンダ 3 社に打診した結果、2 社は来年前半までに対応するとの回答があったが、1 社は処理時間などの懸念から採用しない項目を列挙している。

12. 次回の予定

- 日時：9 月 16 日(木)　14 時－17 時
- 場所：機械振興会館 4 階　JIPDEC 第 3 会議室

以上

平成 22 年度　第 3 回 PDQ 国際標準化要件検討委員会　議事録

日　時：9 月 16 日(木)　14:00－16:40
場　所：機械振興会館 4 階　JIPDEC 第 3 会議室
出席者：委員長　大高哲彦(NUL)
委員　平岡弘之(中央大)、小林一也(富山県立大)、田中文基(北海道大)、相馬淳人(エリジオン)、坂本千秋(MER)、石川義明(MER)、田中敬昌(DIPRO)、多賀和春(ホンダ)、小形充生(スタンレー電気)、岩壁清行(NDE)、三富一弘(MHI)
事務局　鈴木　勝(JIPDEC/DUPC)
（順不同、敬称略）　13 名

配布資料：
- PDQR10-03-01：平成 22 年度第 2 回 PDQ 国際標準化要件検討委員会　議事録
- PDQR10-03-02：PMI Errors and Corrections（D. Cheney, 改訂版）
- PDQR10-03-03：PMI Errors Types（D. Cheney, 改訂版）
- PDQR10-03-04：PMI Errors 整理（PDQ 規格開発委員）
- PDQR10-03-05：SASIG 3D Annotated Model Standard（SASIG）
- PDQR10-03-06：3D 図面独自の PDQ 項目候補例（小形）

議　事：
1. 配付資料の確認（事務局）

2. 前回議事録の確認（大高委員長、PDQR10-03-01）
- Boeing 社の Mr. Zuray からは追加の技術資料がまだ来ていない。

(事務局)前回会議後に案内したように、発行された EN9300 文書は日本規格協会から購入できるが、この委員会には図書購入予算がないので、必要な組織で購入していただきたい。

→(大高)LOTAR Executive Summary にある技術資料の入手希望があれば、自分が Boeing 社のルートで要望するので、必要なものを知らせてほしい。

- 拡張 PDQ の枠内で GD&T に取り組むかどうかは、次の点に依存する。
  ・GD&T が技術的に見て規格化を行うのに適切な状態まで成熟しているか。
  ・成熟しているとして、最小セットを実現するまでにどれだけのリソースが必要なのか、またそれが我々のリソースの範囲に収まるのか。
  これらについて、Vico Equense 会議で議論する。
- NIST が検討している生産準備対応の GD&T の要件について Doug Cheney に聞く。

(三富)航空機業界では CATIA のバージョンまで指定されてデータ交換を行っているので、大きな問題はないと思われるが、前回の GD&T エラーの資料を自社の設計者に見せたところ、こういう整理は無駄にはならないということであった。ただしアルミやチタンの部材についてはこれでよいが、最近利用が増えている複合部材については要件が異なるかもしれない。

(石川)前回議事録の 10 章の最後の部分に「航空機業界の CAD は CATIA で統一されているので」と書かれているが、エンジンメーカでは事情が異なるので、「機体メーカでは」と限定した方がよい。

→(事務局)前回議事録を改訂して再配布する。→9/29 に改訂版を配布済み

- 11 章の記述には不適切な部分があるかもしれないので、本日多賀さんから最新の状況を説明してもらってから見直す。

3. PMI Errors の改訂版と整理資料（大高委員長、PDQR10-03-02, -03, -04）
- PDQR10-03-03 は、PDQR10-03-02 の項目を実務の観点で分類したものであるが、本来の GD&T の問題点の分類にはなっていない。
- PDQR10-03-02（前回の資料 PDQR10-02-09 の改訂版）では誤りと正解が提示されているが、必要な幾何公差がすべては表示されていないものがあり、正解が理解できないものもあるので、Vico Equense 会議で不明点を Doug Cheney に聞く。
- 今回の整理（PDQR10-03-04）の目的は、コンピュータプログラムでどういうアルゴリズムを

組めば自動的にチェックできるかを考えるためである。

- このの資料は米国 DoD の要件として書かれているが、そのための特異性がないか、また SASIG/JAMA の DEV とどこが異なるのかを教えてほしい。

(田中敬昌)JAMA は GD&T だけに特化して検討はしていないので、参考にはなるかもしれないが、GD&T 全体の検討のベースにはならない。

- JAMA も参加している STEP AP242 のプロジェクトで STEP の GD&T を書き直そうとしているので、その結果が今回の資料とどのように関係するのかに関心がある。
- JAMA の 3D 図面の担当者にこの資料を見せて、自動車業界の要件を聞きたい。設計実務者の意見を求める必要があるが、設計業務では寸法公差から幾何公差に移行しているとすると、こういう資料が役立つのではないか。

(事務局)そのためにはどのように働きかければよいか。

→(田中敬昌)DE 部会の下部の規格展開分科会の責任者であるホンダの座間さんに依頼するのがよい。

→(事務局)会議後に大高委員長が座間さんに依頼して、10/8(金)に会合をもつことになった。

- 同様に SJAC でも今回の資料を検討してほしい。

(三富)内部で展開して意見を求める。

(石川)Part 59 では erroneous_data と inapt_data に分類しており、前者は CAD のプログラムミスで発生し、後者は設計者の作業ミスで発生する。それを考えると、前回の岩壁さんの見方（CAD がまっとうならこんなことは起きない。設計者の側ではこんな間違いはしない）が当てはまらない可能性がある。本来起こりえないことが、プログラムのミスと作業者のミスで起こり得るので、その両方を考慮して検討してほしい。言い換えると、PDQR10-03-02 の誤りと正解の差が明確でないことがある。

→(岩壁)社内ルールで対処している部分があるので、それをエラーとして排除されると困る。

→(石川)規格をゆるめて実用化するのはよいが、ISO 規格を作る場合は ISO のルールに従うしかない。PDQR10-03-02 の方向性は間違っていないが、GD&T でも erroneous と inapt があることを前提とする必要がある。

→(大高)プログラムのミスで erroneous は発生しうるが、論理的なチェックが可能である。一方、inapt に対応するのは難しいので、問題点の分類をしたい。

→(相馬)この資料には、実務からだけではなくて、規格書から頭で考えて書いたと思われるものがある。

→(小形)CAD でこんなエラーが出たら、設計者が自分で修正する。

- **10 月の SC4 会議の前に疑問点を出してもらえば、会議で検討できる。**

(事務局)参考文献として ASME の規格がいくつか提示されているが、どれを入手すればよいか。

→(相馬)14.41 が 3D で、その中で 2D の 14.5 を参照しているので、この両方が必要である。

→(大高)その他のものについては、Doug Cheney に確認すればよい。

(大高)JAMA にはこの分野の間違い集がないか。

→(田中敬昌)JAMA としてはないが、各社で作っているかもしれない。

→(小形)当社では自由曲面が中心なので、これらの GD&T にはなじみがない。

4. SASIG 3D Annotated Model Standard 紹介（田中敬昌委員、PDQR10-03-05）

- 日本語版があるので別途提供できる。

→(事務局)会議後に田中敬昌委員から入手して、9/29 に委員に配布した。

- この資料は AIAG が作成したが、JAMA の数社が出した要件をとりまとめたものである。

(大高)16 ページの Figure 1.2-1 のように対象範囲が広いのか。

→(田中敬昌)従来 2D で表現していたものを 3D に移行するためには、どうすればよいかをまとめている。ビューアと CAD のベンダには、それぞれに関連する部分を抜き出して要件として出しており、まだ実現できていないことがほとんどである。

- ISO 16792 でできることは 16792 参照と書くことによって整合を図っているが、それ以外に 16792 に対する要望がある。

(相馬)この資料を理解するためには 16792 の知識が必須で、それ以外に JAMA の要望を加えたものが全体になる。

(大高)ここで前提としている featureing はどの程度のものか。
→(相馬)28 ページでは、feature model のデータ構造がなくてもできることを書いてある。
(大高)GD&T と重なるところはあるが、GD&T の要件資料とはいえない。もっと詳しい技術資料があるか。以前に永井さんから聞いたのはもっと高度な印象であったが。
(田中敬昌)3D 画面にすべての annotation を表示すると分からなくなるので、回転方向によって表示対象を切り替えるとか、CATIA のキャプチャごとに annotation を表示するとか、annotation が重ならないように自動判定するとかの要件を示している。
(大高)各社の共通部分が大きければよいが、OEM ごとに要件が異なり、ベンダごとに実装のレベルが異なると混乱するのではないか。
→(田中敬昌)各社は PDQR10-03-05 を基に、固有の内容を加えてそれぞれの仕様書を作って運用している。
(大高)主要なアプリケーションが書かれているが、もっとあるのでは。

- 3D 図面の ISO 化については、当初提案先として考えていた TC10 の動きがよくないので、AIAG が SC4 に切り替えることを考え始めたようである。

→(大高)来週の PPC telecon でこの件を話題にするかもしれない。

- JT の ISO 化の件は、SASIG は特定のベンダの仕様を支持しない方針である。Oscar Rocha が SC4 で 3D Visualization プロジェクトを担当していたことも SASIG では疑問に思われていた。10 月の SASIG 会議（SC4 会議の翌週）に ProSTEP の人から JT の話をしてもらうように依頼している。

5. 3D 図面独自の PDQ 項目候補例（小形委員、PDQR10-03-06）

- これはビューア用に変換されたデータに関する考察である。単純に図面としてみた場合の問題と、データを活用する際の問題の両方が含まれている。

(相馬)これは返還前の元データと比較して分かるもので、比較プログラムの開発者にこれらをチェックできるようにという要件である。
→(大高)チェック項目としては分かるが、これをそのまま criteria にする気はしない。
→(小形)事例として参考にしてもらえればよい。
→(大高)変換プログラムの単純ミスではなくて、もっと意味が深いものがあるか。
→(小形)変換した際に、テキストデータはイメージデータではなくてテキストデータになってほしいが、今は読めればよいという方向である。
→(大高)「3D 連携解除」は本質的かもしれないが、問題なのか。
→(相馬)PMI で、あるデータを指示すると関連するデータをハイライト表示することなどが求められる。
(小林)どれが一番よく発生して、工数がかかるのか。
→(小形)比較するだけなら工数はかからないが、設計変更するとなると最初から作り直しになる。

6. PDQ-S を採用した PDQ ガイドライン V5.1 のベンダ実装計画の改訂版（多賀委員、資料を画面に表示して説明）

- JAMA でツールベンダと CAD ベンダに対する PDQ ガイドライン V5.1（PDQ-S を完全に包含）についての実装状況の調査を実施し、PDQ 項目ごとに実装済み／計画中／計画なしといった詳細な調査結果が揃った。ツールベンダ 3 社の内、2 社が来年前半までに対応する。CAD ベンダ（日本法人）は問題を理解していないようで、対応が期待できない。

(事務局)本日の資料に対応して、前回議事録の記述を改訂する。
→(事務局)9/29 に改訂版を配布済み

7. 次回の予定

- 日時：12 月 14 日(木)　14 時－17 時
  午前中に PDQ 規格開発委員会を開催する。

以上

平成 22 年度　第 4 回 PDQ 国際標準化要件検討委員会　議事録

日　時：12 月 14 日(火)　14:00－17:00
場　所：機械振興会館 4 階　JIPDEC 第 4 会議室
出席者：委員長　大高哲彦(NUL)
委員　平岡弘之(中央大)、田中文基(北海道大)、相馬淳人(エリジオン)、石川義明(MER)、田中敬昌(DIPRO)、多賀和春(ホンダ)、小形充生(スタンレー電気)、松永三夫(日立)、三富一弘(MHI)
オブザーバ　土橋俊夫(SJAC)
事務局　鈴木　勝(JIPDEC/DUPC)
（順不同、敬称略）　12 名

配布資料：
- PDQR10-04-01：平成 22 年度第 3 回 PDQ 国際標準化要件検討委員会　議事録
- PDQR10-04-02：GD&T　三富委員インプット
- PDQR10-04-03：JEITA における PMI/GD&T 検討状況（松永）
- PDQR10-04-04：PMI Errors Analysis - NIST TDP team response（Doug Cheney）
- PDQR10-04-05：Certification of 3D MBD Data（NIST）
- PDQR10-04-06：PDQ-S Edition 2 New Quality Criteria (PowerPoint)（Doug Cheney）
- PDQR10-04-07：PDQ-S Edition 2 New Quality Criteria (Excel)（Doug Cheney）
- PDQR10-04-08：Questions/Comments to Mr. Doug Cheney's Proposal（大高）
- PDQR10-04-09：CADdoctor 上の 生産要件チェック項目（相馬）
- PDQR10-04-10：GD&T data の"データ品質検査"規格に関する初期検討（石川）
- PDQR10-04-11：Current Status of TC 10 & TC 213 Standards for Mechanical Products（石川）

議　事：
1. 配付資料の確認（事務局）

2. 前回議事録の確認（大高委員長、PDQR10-04-01）
(事務局)発行された EN9300 文書は日本規格協会から購入できるが、この委員会には図書購入予算がないので、必要な組織で購入していただきたい。ASME Y14.41 と Y14.5 は JIPDEC で購入した。

3. 10 月の SC4 会議での PDQ プロジェクト説明資料（大高委員長、配布資料には含まれず）
- "Status of PDQ Standard Extension"（PDQ 規格開発委員会で配布）について紹介した。

4. SC4 会議での Doug Cheney からの入手資料紹介（大高委員長、PDQR10-04-04, -05, -06, -07）
(1) NIST のプロジェクトの Phase 1 報告資料（PDQR10-04-05）
- **この資料はこの委員会内限りとして、外部には再配布しないで下さい。**
- 長期保存の対象は形状データだけではなくて、GD&T データを伴う必要がある。

(相馬)この資料にある"Validation Handbook"は、自分の会社の米国法人（Elysium、プロジェクトメンバー）が担当している。
(石川)Slide 29 で TC10 や TC213 の規格が参照されていない。
→(大高)STEP AP242 の開発で考慮されるはずなので、そこに必要な情報を伝えればよい。
(大高)Slide 31 にある Phase 2 の目標は、SJAC でもチェックした方がよい。
(2) 生産準備用データの品質チェック項目案（PDQR10-04-06 の前半）
- これは米国 DoD の装備品における要件を示しているが、相馬委員の資料 PDQR10-04-09 は、主として自動車会社の人から聞いている、射出成形と鋳造におけるデータ品質問題をとりまとめ、その一部のチェック機能をソフトウェアツールで提供していることを示している。

(多賀)生産準備は非常に範囲が広く、各社のノウハウが含まれているので、標準化になじむのか疑問である。

→(大高)この程度では実用上も役立たないと思う。
→(石川)生産準備の専門家である坂本委員（本日欠席）の意見を聞いてみる。
(3) GD&T の minimum set 案（PDQR10-04-06 の後半）

- **田中文基委員が PDQ 規格開発委員会のために、PDQR10-04-06 と PDQR10-04-07 の内容、および前回配布した PMI エラーの事例の図を組み合わせて編集した資料を、この委員会のメンバーにも配布する。**

→(事務局)12/15 に配布した。

5. Doug Cheney からの入手資料に対する質問／コメント（大高委員長、PDQR10-04-08）

- 午前中の PDQ 規格開発委員会でのコメントを反映させたものを Doug に送付する。

→(事務局)12/21 に大高委員長から送付した。

6. GD&T に関する航空宇宙業界の状況（三富委員、PDQR10-04-02）

- MRJ の設計図面は ASME の仕様に準拠している。
- 航空機では顧客別の号機管理が普通である。製造途中で当初の引き宛先が変わることもある。

(大高)データ変換時間が掛かりすぎるというのはどのくらいのレベルか。
→(三富)CAD→Viewer などのデータ変換が、夜間バッチ処理で 1 日分を終了できないと困る。
(田中敬昌)今後の長期保存で考えているデータ形式は Viewer か STEP か。
→(三富)STEP の方が望ましい。
→(大高)部品表関係についてはどうか。
→(三富)部品表データは以前から STEP AP232 で Boeing から受け取っているが、BOM としてはよくできている。
(石川)エンジンメーカは、機体とのインタフェース部分のデータを多分 CATIA に変換している。機体の製造継続期間中は、データの再利用性が必要だと思う。号機管理は顧客別に設計が異なるために必要である。FAA の指針にデータ品質要件の規定があれば教えてほしい。
→(三富)あるというように設計部門から聞いたことがある。
→(石川)日米欧が共同で ISO 9001 を航空宇宙業界向けにカスタマイズした AS 9100/EN 9100/JIS Q 9100 にはトレーサビリティについて細かく規定されている。
(相馬)quality check の有効性には、特定のデータに注目した品質と、フォーマット変換での再現性の品質の両方があるが、航空機業界の関心は後者が中心か。
→(三富)機体データは CATIA に統一されているが、何らかの理由でフォーマット変換が必要になる場合があり、その際の品質チェックが役に立つ。
(相馬)Doug Cheney から、CAD のバージョンアップで形状データが微妙に変化し、それと連動した寸法表記が変わってしまうという例を見せられた。彼から入手した PMI エラーの資料は、一つの CAD のデータの中での整合性の問題であり、これがあると変換が失敗するのでチェックが役立つと言えるが、上記の問題に対しては別の対応が必要である。
(石川)設計側の CAD を統一しても、解析や生産技術にデータを渡す際には変換が必要になることがあるが、変換で出る問題が設計に起因することもある。
→(松永)設計側では十分に問題をチェックできないので、後工程から指摘されるのを期待している面もある。
(大高)PDQR10-04-07 にある GD&T の minimum set の 44 項目の妥当性を各工業会で評価してほしい（追加配布した田中文基委員の資料を活用）。次回の PDQ 規格開発委員会が 1/25(火)に開催されるので、できればその前の 1/20(木)くらいまでにお願いしたい。
→(多賀)この 44 項目以外にもあったのか。
→(大高)以前に入手した資料（前回の配布資料 PDQR10-03-02）にはもっとあったが、今回絞った根拠を Doug に質問する。

7. JEITA における PMI/GD&T 検討状況（松永委員、PDQR10-04-03）
(1) 3D 単独図ガイドラインの改訂

- JAMA/JAPIA の 3D 単独図ガイドラインを引き継いで、JAMA/JAPIA とも相談しながら JEITA 用に改訂している。JEITA ではアセンブリ関係が 3 次元データの中で一番広範囲に使われているので、その関連の情報を充実させている。

- 組み立てると形状が変化するゴムやバネでは、変形の前後の両方の形状データが必要であるが、CAD の機能では実現できないので、annotation での対応を検討している。

(2) 3 次元データ活用分科会活動

- 金型データ連携は、補助資料がなくても 3D 単独図データだけで渡せるようにするための検討であるが、金型工業会からはノウハウのデータは入れないように求められている。
- 3 次元測定連携には、東大の鈴木宏正教授や産総研の大沢さんが関係している。

(3) 幾何公差推進分科会(仮称)の立上げ

- 日本の電気業界では、幾何公差に関して独立の原則を採用しているが、市販のツールでは ASME 系のテーラーの原理が優勢であり、TC213 もテーラーの原理を採用している。将来的にはこの活動の成果を、3D 単独図ガイドラインに盛り込む。

(大高)幾何公差ベースにするメリットは何か。

→(松永)設計品質の面では、国内ではデータの受け側が対応しているが、幾何公差ベースにすれば海外にそのまま提出して通用する。

→(大高)自動車業界でも同じ状況ではないか。

→(松永)JAMA の 3D 単独図の活動が終了しているので、JEITA の方でとりまとめている。

(大高)先ほどの 44 項目の評価依頼はまだ早いか。

→(松永)これはこれで意味がある。海外企業の日本法人などで進んでいるところもある。JEITA が業界として取り組むことを宣言することに意味がある。

(田中敬昌)PDQR10-04-03 の 2.(ア)の 3 次元 CAD の機能評価に関して、JAMA の場合は指定した仕様に従って作れるかを CAD ベンダに、また見えるかをビューアベンダにそれぞれ機能要件を確認しているが、JEITA は CAD ベンダだけに確認しているのか。

→(松永)現時点では CAD ベンダだけで、ビューアはその次にする。

(石川)2.(イ)の金型データ連携活動の関係者に、Doug の資料（PDQR10-04-06）や相馬委員の資料（PDQR10-04-09）の中の金型に関する品質問題の項目をチェックしてもらったらどうか。

→(松永)JEITA 版の基本モデルを作成して、金型業界が受け取れるかをチェックしている。抜き勾配の関係やモデルの省略をどこまでできるかを評価して決めることになっている。

→(大高)GD&T は含まれていないのか。

→(松永)含まれている。

8. GD&T data の“データ品質検査”規格に関する初期検討（石川委員、PDQR10-04-10）

- 米国のプロジェクトから入手した PMI エラーの資料（前回の配布資料 PDQR10-03-02）が個別の事例から出発しているので、もう少し別の整理をしたいと思って作成した。

(大高)エラー条件の緩和は threshold や accuracy だけではだめか。

→(石川)それだけでは足りないように思うが、具体案はまだない。

(大高)Part 59 から継承する Erroneous/Inappropriate の分類とこの表とはどう対応しているのか。

→(石川)まだ明確ではない。現在の CAD の幾何公差は曖昧であるため、両者の区別が難しい。

9. Current Status of TC 10 & TC 213 Standards for Mechanical Products（石川委員、PDQR10-04-11）

- 2005 年に活動した SC4 の GD&T タスクフォースに合わせて作成した資料の改訂版である。

(大高)履歴情報としては役立つが、PDQ 規格開発チームへの提言と AP242 プロジェクトへの提言とに分けてほしい。

→(石川)そのように改訂するが、2002 年版の ISO Handbook と現在との違いは見ておく必要がある。

(事務局)SC4 の GD&T タスクフォースの最終報告書の資料を石川さんに送付する。→12/15 送付した。

(大高)Doug の 44 項目を石川さんの資料と付き合わせてチェックしてほしい。できれば 1/20 までに希望する。

(松永)公差を全部記入すると煩雑になるので省略したいが、その場合のデフォールト処理はどうなっているか。

→(石川)まず一般公差の考えが活きている。それぞれの製品ごとに一般公差の値は変えてよいこと

になっている。
→(松永)書かない公差を自動的にチェックされても困るので、書かれた公差だけをチェックするのがよい。

10. 次回の予定（最終回）

- 日時：2 月 16 日(水)　14 時－17 時
  午前中に PDQ 規格開発委員会を開催する。

以上

平成 22 年度　第 5 回 PDQ 国際標準化要件検討委員会　議事録

日　時：2 月 16 日(水)　14:00－17:00
場　所：機械振興会館 4 階　JIPDEC 第 4 会議室
出席者：委員長　大高哲彦(NUL)
委員　平岡弘之(中央大)、菊地慶仁(北海学園大)、小林一也(富山県立大)、田中文基(北海道大)、坂本千秋(MER)、石川義明(MER)、田中敬昌(DIPRO)、多賀和春(ホンダ)、小形充生(スタンレー電気)、岩壁清行(NDS)、松永三夫(日立)、三富一弘(MHI)
オブザーバ　土橋俊夫(SJAC)
事務局　鈴木　勝(JIPDEC/DUPC)
（順不同、敬称略）　15 名

配布資料：
- PDQR10-05-01：平成 22 年度第 4 回 PDQ 国際標準化要件検討委員会　議事録
- PDQR10-05-02：GD&T 問題の分類（表示，GD&T 情報，関係）
- PDQR10-05-03：GD&T Criteria コメント（小形）
- PDQR10-05-04：GD&T の質問に対する Doug Cheney からの回答
- PDQR10-05-05：Usage of STEP and JT - Application Scenarios（Daimler）
- PDQR10-05-06：ASD SSG “CAD 3D Electrical Harness Interop” WG Report
- PDQR10-05-07：Data quality test method and criteria for GD&T data（石川）
- PDQR10-05-08：GD&T Draughting standards（石川）
- PDQR10-05-09：PDQ 国際標準化開発委員会へのご意見（JAMA/JAPIA）

議　事：
1. 配付資料の確認（事務局）

2. 前回議事録の確認（大高委員長、PDQR10-05-01）
(1) 6 章の三富委員の説明の補足
- 前回の石川委員の FAA の指針に関する質問について社内の関係者に確認したところ、明確な指針はないが、以前に当該官公庁から MRJ の開発データの長期保存に関して、「CAD のバージョンアップによるデータ非互換や、CAD がなくなった場合にはどうするか」との質問を受けた際に、「人手を掛けてでも何とかして見えるようにする」と回答したことがある。

(2) GD&T に関する各工業会の反応
(大高)これまでの JAMA/JAPIA との打合せでは、時期尚早と言われている。
(松永)JEITA の幾何公差推進分科会の立ち上げは 4 月になる。電気業界を中心として、寸法公差方式から幾何公差方式への移行を数年計画で進める予定で、まずそのための教育から始める。
→(大高)国内では大手でもまだ幾何公差が実務で本格的には使われていないのでは。
→(松永)JEITA もそのように認識しているので、海外の大手ユーザを調査する予定である。
→(石川)機械製品の設計で GD&T を使っていないとは思えないが。
→(松永)2 次元図面としては利用しているが、3 次元形状データと組み合わせて後工程に渡すことはできていない。

3. PDQ 拡張規格開発の状況（PDQR10-05-02, -03, -04、および PDQ 規格開発委員会の配布資料を追加表示）
(1) 8000-311 の概要（文書構成を示す 1/24 の PDQ 規格開発委員会の配布資料を表示）
- 現段階の文書構成は次のとおりである。
  1. An introduction of PDQ-S
     1-1 Major aims of PDQ-S and its target data
     1-2 The relationship of PDQ-S and other SC4 standards which deal with nominal representations of product data
     1-3 PDQ-S の設計思想（英文タイトル未定）

2. Some knowledge for facilitating the use of PDQ-S
   2-1 Employed schema structure
   2-2 Relationships between data quality problems and criteria
   2-3 Some examples for selecting appropriate criteria
3. Recommended scenarios of the effective use of PDQ criteria

- 1-3 節には次のような内容を記述する。
  ① PDQ-S 項目の分類（erroneous/inapt）の考え方（形状データ品質問題の分類）
  ② ヒーラとチェッカの連携の重要性（そのための詳細な検査結果の出力）
  ③ 形状データ品質チェックの基本アルゴリズムの外部仕様の提示
  ④ 形状以外のデータ品質問題への拡張可能な仕組み
  ⑤ criterion と threshold の指定により、いろいろな使い方が可能
- 2-2 節は、規格開発者の視点から品質問題と criteria の関係を記述する。
- 2-3 節は、ユーザの視点から対象とする問題に応じた criteria の選択方法を記述する。典型的な事例を JAMA/JAPIA の展開経験から提供してもらいたい。

(多賀)一つはデジタルアセンブリで、もう一つはサプライヤとのデータ授受の場面がある。
→(事務局)3/18(金)に関係者で打合せを行うことになった。

- 3 章には、PDQ の展開を容易にするためのシナリオとして、以前に小形/菊地/鈴木が相談して作成した資料を元にして、SC4 会議で紹介した資料の内容を充実させて記述する予定であるが、皆さんからもアイデアがあれば提示してもらいたい。

(2) Non-shape data quality の取り扱い（1/24 の PDQ 規格開発委員会の配布資料を表示）

- SASIG PDQ Guidelines にある非形状データ品質項目を取り扱う。資料では"Out of scope"とされている項目も含めることになった。

(多賀)SASIG の Guidelines で該当するすべての項目が対象か。
→(平岡)以前に多賀委員からいただいた資料で、3 社以上で利用されているという項目が対象であるが、あとで追加可能な仕組みになっている。
→(事務局)今回表示した資料に対象項目の一覧が含まれているので、会議後にファイルを配布した。

- ユーザ間で取り決めた非形状データの条件の仕様書を、外部文書としてデータモデルから参照できるようにする。

(多賀)ユーザの品質仕様書は形状データと非形状データの両方を含んでおり、両方に共通の仕組みが必要である。
→(大高)ユーザのニーズは分かるが、それは AP のレベルで対応する必要がある。AP242 開発チームに打診してみてもよいが、実現には時間が掛かると思われる。まず非形状データ品質取り扱いの実現性を示すために、今回のようなモジュールによる方式を考えたが、将来の解決方法を AP242 開発チーム相談していく。

(3) PDQ 拡張規格のデータモデル案（午前中の PDQ 規格開発委員会の配布資料を表示）

- GD&T を形状とは別のスキーマとして 10303-59 に追加するので、edition 2 では従来のタイトル（Quality of product shape data）を変更する予定である。

(4) GD&T quality の整理（PDQR10-05-02）

- 2 月末を目標に、GD&T エラーの分類を見直す。

(多賀)これらのすべてに対応すると、どこまで GD&T の品質がよくなるのか。
→(大高)これらの項目は、十分ではないがコアになる項目だということが NIST のプロジェクトで合意されており、LOTAR プロジェクトも認めると思われる。これらは初期セットなので、各工業会でコメントがあれば遅くとも 6 月までに出してほしい。

(5) 離散化データ品質

- CAE メッシュデータや測定データの品質は先送りする。

(6) Manufacturing に関する Doug Cheney の提案項目（PDQR10-05-04 と前回の配布資料 PDQR10-04-06）

(大高)この 6 項目だけでは、中核になるというよりも氷山の一角のように思える。
(坂本)この程度なら不要である。加工法がいろいろあるので、与える threshold の意味づけがむつかしい。放電加工ならできるが、機械加工ではできないというケースがある。
(多賀)パネルや樹脂部品の金型を意識したものなら意味があるかもしれないが、すでに PDQ-S に

入っているものもある。
(岩壁)コネクタなどの小型部品とバンパーのような大型部品では要件が異なるので、これらが中核とはいえない。
(小形)今の PDQ-S でかなり対応できる。また、このようなエラーがあったら加工側が自分でデータを作り直す。
(田中文基)こういうのもあるなとは思うが、中核かどうかは分からない。
- 皆さんが中核とは思わないので、これらは取り上げない。

4. 2/8-10 に開催された PPC 臨時会議に伴う遠隔会議(2/8)で紹介された資料
(1) Usage of STEP and JT - Application Scenarios（PDQR10-05-05）
- 昨年 10 月の SC4 会議での宿題として Daimler 社が作成したこの資料では、大高委員長の指摘に対する回答がまだ不十分なので、最後の slide の表に基づいて、STEP と JT の使い分けのシナリオを作り直すように要求してある。

(2) ASD SSG “CAD 3D Electrical Harness Interop” WG の資料（PDQR10-05-06）
- LOTAR プロジェクトにおける、長期データ保存の視点からのワイヤハーネスデータの取り扱い検討資料である。

(3) Dassault Systems 社の提案
- 最近 Dassault Systems が STEP の枠組みによるポリゴンデータの標準化を提案しているが、技術的に問題があるので、大高委員長が SC4 の形状の専門家と評価をして、取り扱いをアドバイスすることになっている。希望者には事務局から資料を提供する。

5. JAMA/JAPIA から PDQ 国際標準化開発委員会への意見（PDQR10-05-09）
(1) Slide 1
- 黒字は以前に表明済みで、青字は今回の追加事項である。

(大高)我々の開発プロジェクトが取り扱うのは GD&T データの品質であって、GD&T データそのものを定義するものではないが、Slide 1 の表の左下の内容は後者に対するものであり、むしろ AP242 開発チームに要望を出してほしい。また、NIST や LOTAR のプロジェクトでは 2D annotation には関心がない。
→(小形)2D annotation のデータ品質は、現実的には必要である。
→(田中敬昌)2D は各社各様ですでに対応しているので、これから標準化するというのはむつかしいのではないか。
(大高)データ変換の前後で再現性をチェックする仕組みは応用レベルの問題である。
(大高)業界横断的な普及展開活動への支援は、ユーザが METI の製造産業局や自動車課などに要望してほしい。

(2) Slide 2,3
(大高)JAMA/JAPIA の DE 部会で検討すべきことではないか。あるいは AP242 開発チームの方で検討した結果として、AP 側と PDQ 側の役割分担を合意するのが適切である。

6. GD&T data quality に関する調査・検討（石川委員、PDQR10-05-07, -08）
- PDQR10-05-08 の geometrical tolerances のシートはまだ作業中なので、改訂版を再配布する。

(大高)これは criterion を書く人に役立つので、2 月末までにほしい。
- ISO/ANSI の仕様の違いは、両方に対応せざるを得ない。

(大高)田中敬昌委員から、AP242 では TC213 の規格をどこまで追跡しているのかを、プロジェクトリーダの Max Ungerer に確認してほしい。
(松永)ISO の詳細仕様はほとんど ASME に移行している。

7. 今後について
- 委員会は今回が最後であるが、メーリングリストは残すので、規格開発に関する情報交換が可能である。

以上

付録 2.　委員会の配付資料

第１回委員会（6 月 2 日）

平成 22 年度　第 1 回 PDQ 国際標準化要件検討委員会

1.　日　時　　2010 年 6 月 2 日(水)　14:00～17:00

2.　場　所　　機械振興会館 4 階　JIPDEC 第 4 会議室

3.　議　題　　・PDQ規格開発状況の報告
　　・長期データ保管の要件検討の進め方

4.　配布資料

- PDQR10-01-01：平成 22 年度 PDQ 国際標準化要件検討委員会　委員名簿
- PDQR10-01-02：平成 22 年度 PDQ 国際標準化要件検討委員会　実施計画書
- PDQR10-01-03：平成 21 年度第 5 回 PDQ 国際標準化要件検討委員会　議事録
- PDQR10-01-04：Status of PDQ Standard Extension（大高）
- PDQR10-01-05：Expected contents of ISO 10303-59 Edition-2（平岡）
- PDQR10-01-06：Expected contents of ISO 8000-311（相馬）
- PDQR10-01-07：Technical Considerations on PDQ-S Extension（大高）
- PDQR10-01-08：Business-condition-oriented data quality criteria（平岡）

以　上

平成22年度　PDQ国際標準化要件検討委員会　委員名簿

番号	氏　名	勤務先及び役職名	委嘱理由
1	大高　哲彦 (委員長)	日本ユニシス株式会社　上席スペシャリスト	ISO TC184/SC4専門家 10303-59エディタ
2	平岡　弘之	中央大学　理工学部精密機械工学科　教授	ISO TC184/SC4専門家 10303-59プロジェクトリーダ
3	菊地　慶仁	北海学園大学　工学部電子情報工学科　教授	ISO TC184/SC4専門家 10303-59開発メンバ
4	小林　一也	富山県立大学　工学部機械システム工学科 准教授	ISO TC184/SC4専門家 10303-59開発メンバ
5	田中　文基	北海道大学　大学院情報科学研究科　准教授	ISO TC184/SC4専門家 10303-59開発メンバ
6	相馬　淳人	株式会社エリジオン　取締役最高技術責任者	ISO TC184/SC4専門家 10303-59開発メンバ
7	坂本　千秋	有限会社設計生産工学研究所　代表取締役	(社)日本工作機械工業会代表 ISO TC184/SC4専門家
8	石川　義明	有限会社設計生産工学研究所　取締役	ISO TC184/SC4専門家
9	田中　敬昌	デジタルプロセス株式会社　次長	(社)日本自動車工業会代表
10	多賀　和春	ホンダエンジニアリング株式会社　技術主任	(社)日本自動車工業会代表
11	小形　充生	スタンレー電気株式会社　課責長	(社)日本自動車部品工業会代表
12	岩壁　清行	株式会社日本デザインエンジニアリング 代表取締役社長	(社)日本金型工業会東部支部代表
13	松永　三夫	株式会社日立製作所　主任技師	(社)電子情報技術産業協会代表
14	三富　一弘	三菱重工業株式会社　主席チーム統括	(社)日本航空宇宙工業会代表

委員名簿には個人情報が含まれておりますので、取り扱いにご注意下さい。

平成22年度　PDQ国際標準化要件検討委員会　実施計画書

（財）日本情報処理開発協会
電子情報利活用推進センター

１．目的

製品開発における３次元形状データに関して、日本が ISO TC184/SC4（産業データ）に提案した「製品形状データ品質規格：ISO 10303-59」を開発してきたが、平成 20 年 10 月に国際規格（IS）として発行され、世界の自動車産業（SASIG、JAMA/JAPIA）での採用という成果を生んでいる。この成果をもとに TC184/SC4 国内対策委員会（JNC）と SASIG の合意に沿って、対象範囲を拡張したあらたなデータ品質規格を、TC184/SC4 で取り組んでいる産業データ品質規格（ISO 8000 シリーズ）とも関連付けて提案・開発することになった。

これに伴って、あらためて国内の製造業界における要件をとりまとめるために、昨年度は関連工業会を代表する専門家と、規格開発の専門家をメンバとする PDQ 国際標準化要件検討委員会を設置し、エンジニアリング分野で取り扱う製品データの品質に関する要件を抽出して、優先度の判断と技術的解決方法の検討を行い、当面の規格の対象範囲を定義した。今年度も同委員会を設置して、具体化した規格の開発状況を注視するとともに、中長期的な要件として残された課題の検討を進める。

以上の活動は ISO TC184/SC4 の活動範囲であることから、関連する各個別の活動に参加し、関連する国際規格策定へのわが国産業界の意見反映を図る。

２．検討内容

（１）今年 4 月に TC184/SC4 に提案した二つの規格（10303-59 edition2 と 8000-311）について、PDQ 規格開発委員会からの開発状況の報告を得て、利用者の観点からの意見を範囲させる。

（２）航空機業界や自動車業界で関心が高まっている長期データ保存に関するデータ品質について、先行する欧米のプロジェクトとも連携しながら、我が国の要件を検討する。

（３）その他の分野についてもニーズがあれば検討する。

３．事業の実施体制

①調査検討体制

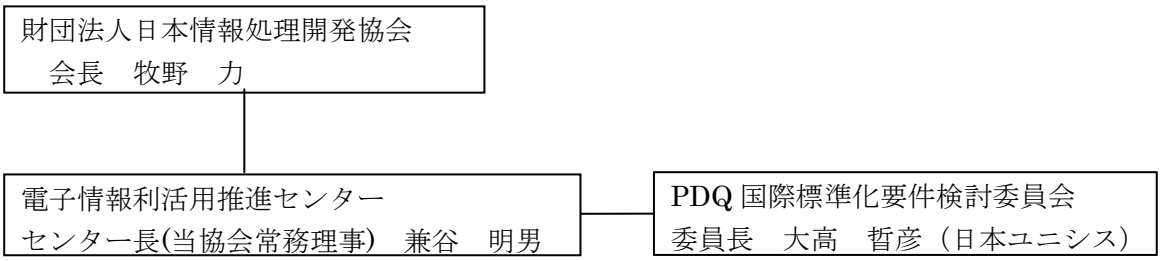

②担当者

鈴木　　勝（電子情報利活用推進センター　主席研究員）
河内　千恵（電子情報利活用推進センター　主任部員）

４．実施期間及びスケジュール

委員委嘱期間：平成２２年６月１日から平成２３年３月３１日まで

	６　月	７　月	８　月	９　月	１０月	１１月	１２月	１　月	２月	３月
①委員会開催	○	○		○		○		○		
②TC184/SC4会議	△				△					
③PDQ規格開発のフォロー	→	→	→	→	→	→	→	→	→	
④長期データ保存の検討	→	→	→	→	→	→	→	→	→	
⑤報告書の作成									→	→

以　上

平成 21 年度　第 5 回 PDQ 国際標準化要件検討委員会　議事録

日　時：3 月 9 日(火)　14 時－16 時 35 分
場　所：機械振興会館 4 階　JIPDEC 第 3 会議室
出席者：委員長　大高哲彦(NUL)
委員　平岡弘之(中央大)、菊地慶仁(北海学園大)、小林一也(富山県立大)、田中文基(北海道大)、相馬淳人(エリジオン)、石川義明(MER)、田中敬昌(DIPRO)、多賀和春(ホンダ)、小形充生(スタンレー電気)
オブザーバ　松永三夫(日立)、三富一弘(MHI)、野中秀樹(SJAC)
事務局　鈴木　勝(JIPDEC/ECPC)
（順不同、敬称略）　14 名

配布資料：
- PDQR09-05-01：第 4 回 PDQ 国際標準化要件検討委員会議事録
- PDQR09-05-02：Some Questions on LOTAR
- PDQR09-05-03：8000-311 内容原案（相馬）
- PDQR09-05-04：“品質検査対象データの分類”と“10303-59 ed.2 拡張対象データ”の検討（石川）
- PDQR09-05-05：委員会成果報告書案（事務局）

議　事：
1. 配付資料の確認（事務局）
- 委員会成果報告書案（PDQR09-05-05）の内容に不適切な記述があれば、至急お知らせいただきたい。

2. 前回議事録の確認および関連する情報（大高委員長、PDQR09-05-01）
（前回議事録に書かれていない内容を以下に示す）
- 新 PDQ 規格は 10303-59（Part 59）の edition2 とする。拡張機能としては CAE メッシュ（FEM と BEM 用）および point cloud（測定データ）を対象とする離散化形状データの品質を想定している。それとともに、Part 59 の Usage Guide である 8000-311 を開発する。SASIG PDQ Guidelines にあって Part 59 に含まれていない項目の中で、うまくできそうなものは積極的に入れていくというのが基本方針で、入れられなかった項目はその理由を Appendix に書くことを考えている。
- PDQ modules の開発で我々ができることはほぼ終了している。既存 module の機能追加など海外の専門家に対応を依頼する部分が残っているが、AP242 での利用計画には支障がない。

(田中敬昌)自動車業界による AP242 の検討状況については、3/2 の JAMA の会議で、AP242 の開発に賛成して費用を負担することが承認された。米国の AIAG は賛成だが、費用は NIST の方に出しているので直接は負担しない。フランスの GALIA は費用が出せないので賛成しないことになった。ドイツの VDA は 4 月に正式決定するまで白紙である。スウェーデンは最近 SASIG の会議に参加していないので確認していない。

- 2/19 の JAMA 電子情報フォーラムの 3D 図面長期保管標準化活動の報告では、まだあまり具体的な内容がなかった。AP242 の話もあるので、要件が似ていると思われる航空機業界の先行する成果をキャッチアップして、両方の業界が協調して進めるようになることを期待する。
- D. Cheney に指摘された STEP の製品モデルデータと品質関連データの位置づけについては、実務的な観点で 8000-311 に入れるつもりである。
- 皆さんからいただいた LOTAR に関する質問事項を LOTAR の Mr. Zurey に送付したが、本日までには回答が来なかった。1 次回答が来たらそのままメーリングリストで配付する。

→(事務局)3/12 に回答を入手したので委員に配布した。

3. Mr. Zurey に送付した質問項目の確認（大高委員長、PDQR09-05-02）
- 皆さんからいただいた質問項目を、General Questions と Specific Questions に分類した。

(平岡)Q15 はどのような問題か。

→(三富)同じ部品が機体のいろいろな場所で使われることがあり、CAD データ単体を管理するのは比較的簡単であるが、機体として取り出そうとするとそれぞれの位置情報が重要になる。
→(平岡)個々のインスタンスに製造番号などを付けて管理することはしないのか。
→(三富)設計変更が起こると、位置は同じでもインスタンス番号が変わってしまう場合（ダッソー・システムズ社の ENOVIA 等）がある。
→(石川)形態(構成)管理データと CAD 管理データの関係の問題である。
→(田中敬昌)自動車では 1 ヶ所の部品でも車種によって位置が変わることがあり、それを管理するために、BOM 側の付属情報として位置データを持たせている。
→(相馬)LOTAR の場合は STEP に変換して保存することを想定しているので、実際の業務の場合とは事情が異なる。
→(石川)今の STEP ではこの問題に対応できないので、機能拡張が必要になるかも知れない。
→(松永)電気製品では CAD と BOM が完全に分かれているので、生産オーダの際に位置情報を付けるようにしており、それをサービス BOM 的な管理システムに取り込んでいる。
→(三富)ENOVIA で苦労しているはずなので、それをよく知っている Boeing 社の人に対応を聞いてみたい。
(事務局)委員会後に届いた Mr. Zurey の回答を踏まえて、大高委員長から次のコメントをいただいた。

LOTAR では絶対座標系（機体座標系など）で表現するか、局所的に Mating Relation で表現するとのことで、いずれも既存の STEP（Part203、Part109）の範疇である。さらに細かい実現法（BOM とのからみなど）は今後聞けばよいでしょう。

---

4. 規格開発状況の報告（PDQR09-05-03, -04）

- プロジェクトリーダは Part 59 edition2 が平岡先生、8000-311 が相馬さんで、大高さんが両方のエディタである。

(1) Part 59 edition2（平岡リーダ）

- 離散化形状データを対象とすることが決まっているが、まだその詳細は検討できていない。また、それ以外に GD&T やアセンブリなどのデータをどこまで取り扱うかの検討もできていないので、次回に報告する。

(2) 8000-311（相馬リーダ、PDQR09-05-03）

(大高)この内容はまだ十分議論されていないので時期尚早である。8000-311 の目的がはっきりしていない。自動車業界の人にとっては、SASIG PDQ Guidelines にあって Part 59 に含まれていない項目のどれが今後取り上げられて、どれがそうでないのかを知りたいはずなので、それを 8000-311 の付録に記述するのがよい。Part 59 edition2 ではなくて 8000-311 に入れた方がよいという項目については、品質評価の仕様そのものが書かれる必要がある。
→(石川)Rotterdam 会議で、非形状データに関する項目は Part 59 edition2 よりも 8000-311 に入れた方がよいということになったが、SASIG PDQ Guidelines で non-geometry として分類されている項目に中には、形状関連データとして Part 59 edition2 に入れた方がよいものがある。また、8000-311 とは何かについて Introduction に記述するのがよい。
→(田中文基)本日の資料は 8000-311 に書きたいと思う項目を挙げたもので、章構成を示すものではないと受け取っている。

5. 品質検査対象データの分類と開発優先度に関する私案（石川委員、PDQR09-05-04）

- この資料は規格開発委員会で合意されたものではなくて、技術的な検討の枠組みについて自分の考えを示したものである。

(大高)規格開発委員会でさらに詳しい技術的な検討をした結果を次回に報告する。Part 59 edition2 と 8000-311 の NWI 提案の付属文書については、自分がそれぞれのリーダと相談して用意する。
(大高)多賀さんからいただいた PDQ ガイドライン適用の重要項目といわれているものに対して、規格開発委員会の見解を次回に報告したいが、その後各項目の重要性が変化していないか。
→(多賀)適用推進の前後で変化しているので、最新の状況(2010 年 2 月版)を次回に提示する。

6.　今後の進め方（全員）

(事務局)来年度もこの委員会を継続するので、4 月中に委員の委嘱依頼をする。

(大高)皆さんからいただいた要件に対する開発側の検討結果を報告するとともに、長期保存について勉強していく。幸い Boeing や Airbus の人たちが我々の活動を歓迎してくれているので、情報を収集して我々の知識レベルを上げてから、日本の自動車業界や航空機業界固有の要件について議論したい。今年度のメンバは是非来年度も継続していただきたい。

(野中)基本的には継続したいので、SJAC として三富さんを支援できるような体制を検討したい。

→(大高)ある程度議論が進んでいくと、航空の実務家同士の話が出てくると思うが、情報収集の段階では中立的なこの委員会を利用してもらいたい。

→(三富)我々は 787 の開発では先方の管理の仕方を学んでいる段階であるが、当社の MRJ の開発から我々独自のやり方が出てきたら、それをうまく先方にぶつけられるとよい。

(多賀、小形)それぞれが継続できるように適切な文面の依頼状を出してもらうのがよい。

(田中敬昌)5 月の SASIG 神戸会議の後、自分が SASIG 総会の議長（1 年半）になる可能性が高い。

(松永)来年度は自分が委員として参加できる可能性がある。JEITA の 3 次元図面の標準化活動で長期保存も視野に入ってきたので、この委員会と連携して進めたい。

(大高)NWI 提案資料を作成したので、3/15 に TC184/SC4 議長に送付する。2 週間の Letter Ballot で異論がなければ、4 月初めに正式に NWI 提案が出される。

(平岡)PDQ modules ができてきたので、海外の AP 関係者が真剣に見始めて、いろいろと注文を言ってくる可能性があり、それが edition2 に影響するかもしれない。

(事務局)どうもありがとうございました。来年度もよろしくお願いいたします。

以上

Status of PDQ Standard Extension

June 2010
Japan National Committee for ISO TC184/SC4(JNC)
Chairman: Akihiko Ohtaka

PROGRAM

1. Background
2. History of JNC discussion on PDQ-S extension
3. Status of NWIP for PDQ-S extension
4. Potential contents of the new PDQ standards

Appendix: A scenario of the effective use of the PDQ-S for realizing data quality defect free collaborative product development

1. Background

(1) ISO 10303-59(PDQ-S: Product Data Quality for Shape) was published as an IS in October, 2008.

(2) Just after the publication, SASIG decided, in the SASIG/Paris meeting, to adopt PDQ-S as a replacement of shape related criteria of the SASIG PDQ Guidelines(see the next slide).

(3) SASIG and JNC jointly decided in the Paris meeting to collaboratively enhance PDQ-S in order to cover wider PDQ related issues.

SASIG PDQ/ JNC agreement(Paris, Oct.,2008)

WG Proposal for the Future of SASIG PDQ (1/2)

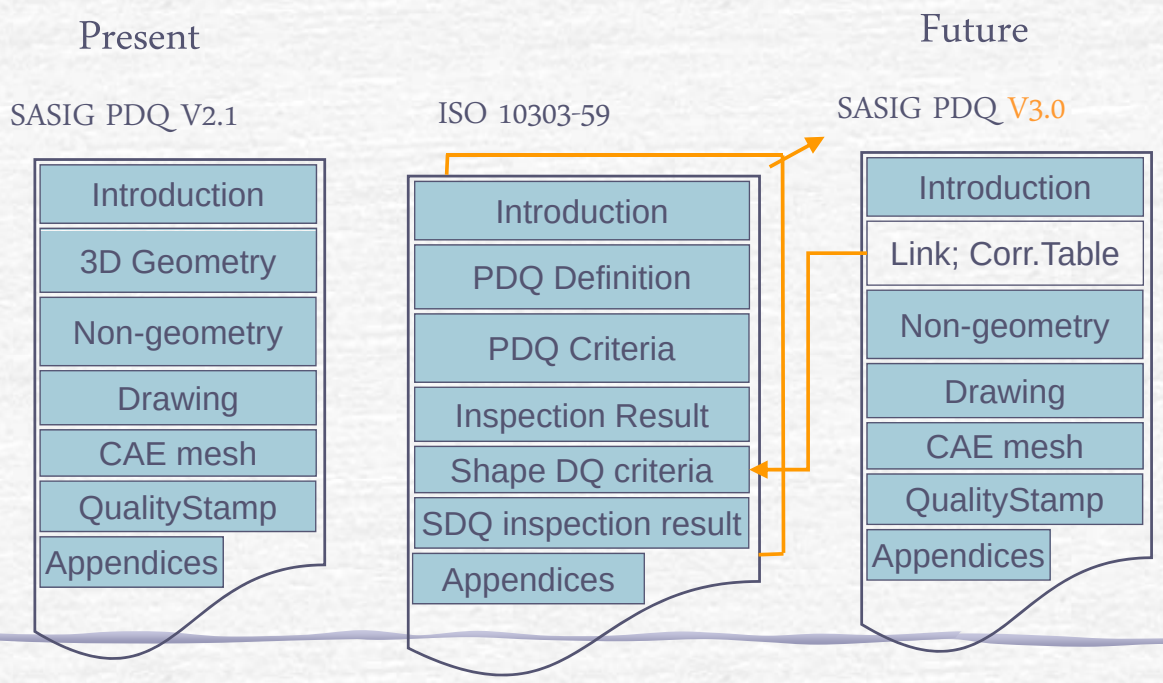

2. History of JNC discussion on PDQ-S extension

(1) Two committees were initiated in spring 2009 under JIPDEC for promoting PDQ standard extension

- PDQ requirement gathering committee

  consists of PDQ experts from JAMA/JAPIA, representatives from aerospace industry, automotive die industry, electronic equipment/parts industry and some experts of manufacturing preparation

- PDQ standard development committee

  consists of STEP experts who developed PDQ-S

(2) LOTAR project (Boeing, Airbus, ProSTEP, etc.) agreed to communicate for removing double efforts in the area of long term data retention

3. Status of NWIP for PDQ-S extension

JNC submitted a NWIP (New Work Item Proposal) for extending ISO 10303-59(PDQ-S) in April 2010 and its ballot started on 8th of May.

<Potential deliverables of the NWIP>

- ISO 10303-59 edition-2: quality of discretized shape data
- ISO 10303 non-shape data quality module
- ISO 8000-311: Usage guide of PDQ-S

4. Potential contents of the new PDQ standards

(1)ISO 10303-59(PDQ-S) edition-2

■ Enhancement of PDQ-S for dealing with discretized shape data is intended. CAE mesh data, point clouds data are within the scope.

■ Some improvements of ISO 10303-59 edition-1 will also be included.

(2)ISO 10303 non-shape data quality module

■ In order to cope with business condition oriented non-shape data quality criteria as enumerated in the ISO/PAS 26183: SASIG PDQ Guidelines, a module will be developed making use of product_data_quality_criteria schema and product_data_quality_inspection_result schema of PDQ-S.

(3)ISO 8000-311

An usage guide of ISO 10303-59(PDQ-S) will be developed under the umbrella of ISO 8000(quality of industrial data) where

■ the situation of PDQ-S will be explained clarifying the aim and target data of PDQ-S, relationship of product data covered by most SC4 standards and product data quality covered by PDQ-S and similarities and differences of PDQ-S and SASIG PDQ Guidelines.

■ contents of PDQ-S will be explained for ease of understanding focusing on schema structure employed, similarities and differences of shape data quality criteria and the relationship of threshold and accuracy.

■ Recommended scenarios of the effective use of PDQ-S will be presented from various view points;

- Recommended process for detecting quality defects and for removing them

- Various use cases such as quality requirement representation, quality declaration, quality authorization, harmonization of checkers and healers.

- Design/manufacturing activity oriented or target object oriented guide may also be included.

Appendix: A scenario of the effective use of PDQ-S for realizing data quality defect free collaborative product development

We believe that satisfaction of the following three requirements is essential for realizing quality defect free collaborative product development;

a. Do not create low quality data (Data causing troubles in downstream processes = narrow/ indirect definition)
b. Do not receive low quality data
c. Do not propagate low quality data

In order to promote satisfaction of these requirements, corresponding burden of users' activity for that purpose shall not be significant and the mechanism which guarantees automatic satisfaction of these requirements when engineers work on well defined procedure is required.

A scenario of the effective use of PDQ-S for realizing data quality defect free collaborative product development(A1 – A3)

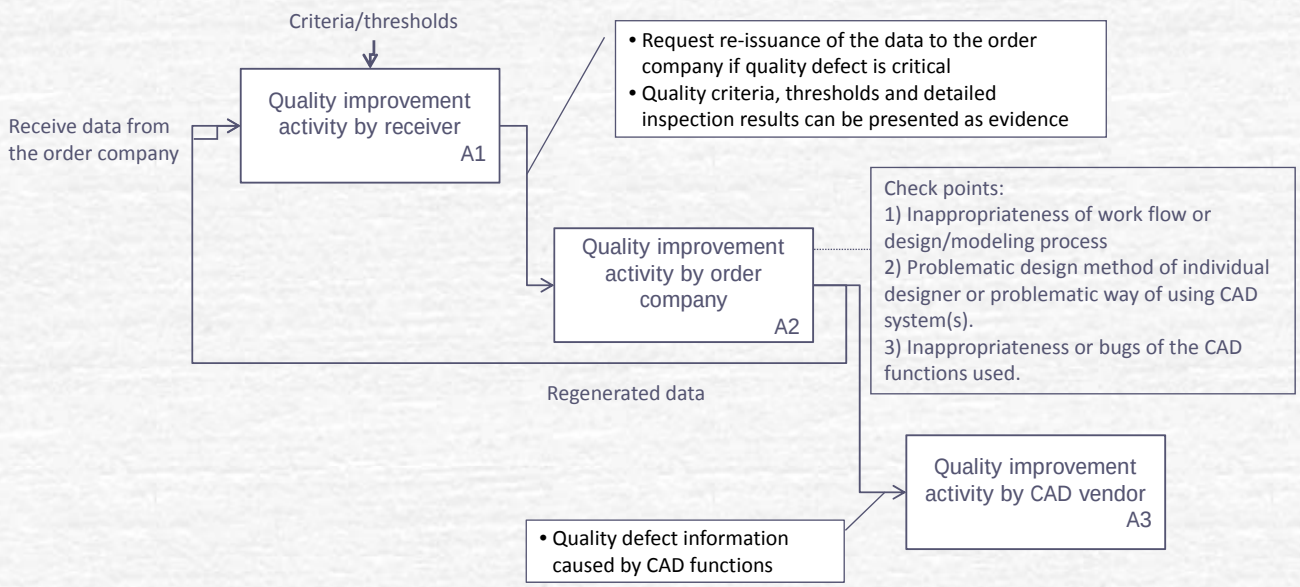

Quality improvement activity by receiver(A1)

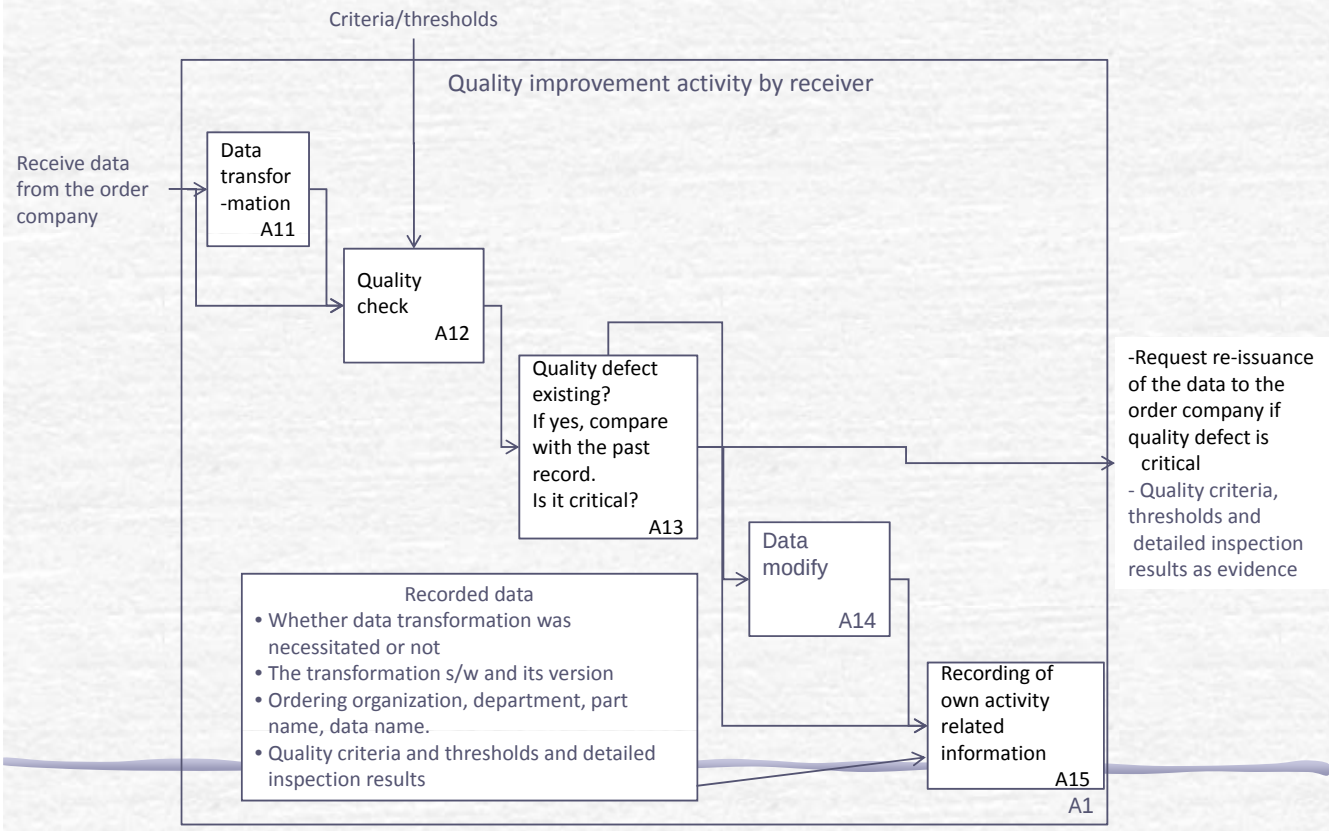

END

Expected contents of ISO 10303-59 Edition-2

Japan PDQ standard development project
Hiroyuki Hiraoka, Chuo University, Japan

1. Motivation

The first edition of ISO 10303-59 (PDQ-S) published October, 2008 provides basic mechanism and resources for the representations of quality criteria, measurement requirements and inspection results for general product model data, and in detail for product shape data. Criteria for shape data quality there were selected based on automotive industry's requirements, but they are widely applicable since requirements on product shape data quality are mostly common to all types of manufacturers. Successful standardization and its adoption by automotive industry worldwide motivated extension of ISO 10303-59 for further strengthening the standard to cope with remaining product data quality related challenges. Identification of requirements to be included in ISO 10303-59 edition-2 has been discussed inviting experts from automotive industry, aerospace industry, die industry and electric/electronic industry. Requirements that require technical resource model will be selected from among identified requirements and they will be standardized in the second edition and/or in module form.

2. Expected enhancements and modifications

Expected enhancements though not limited to them include the following.

1) Quality of discretized shape data: Related criteria will be added in shape_data_quality_criteria schema to deal with quality of discretized shape data. Those criteria may be used for CAE mesh data, point clouds data and other discretized shape data. Other schemas may also be modified as necessary to support these criteria.

2) Quality of other shape-related data: Criteria may also be added in shape_data_quality_criteria schema to deal with quality of shape-related data such as assembly and parametrics. Other schemas may also be modified as necessary to support these criteria.

Expected modifications include;

3) Correction of errors and improvement of insufficiencies: Known errors and insufficiencies of the first edition will be corrected or resolved as appropriate. Editorial correction will also be made as necessary.

Enhancements of related application modules

4) Application modules based on ISO 10303-59 will be enhanced and modified in accordance with the enhancements and modifications mentioned above.

3. New module

A new module will be created using some entities defined in product_data_quality_criteria schema and product_data_quality_inspection_result schema for dealing with business condition oriented criteria of non-shape data.

END

Expected contents of ISO 8000-311

Japan PDQ standard development project
Atsuto Soma, Elysium Co., Ltd., Japan

1. Motivation

ISO 10303-59 (PDQ-S) published in 2008 provides basic mechanism and resources for the representations of quality criteria, measurement requirements and inspection results for general product model data, and in detail for product shape data. It includes exhaustive set of shape data quality criteria for resolving real-life shape data quality related problems.

The fact that quality of product data is a new concept in ISO 10303 and the amount of shape data quality criteria included in ISO 10303-59 may make users difficult to effectively and appropriately select the most suitable criteria for his/her problem. This is the reason why we came to the conclusion that we should develop a standard under ISO 8000 as a usage guide of ISO 10303-59.

2. Expected Contents

Contents of the standard will include the following.

1) .The situation of the PDQ-S: Major aim of the PDQ-S and its target data will be clarified. The relationship of the PDQ-S and other SC4 standards which deal with nominal representations of product data will also be described. Then, the PDQ-S will be compared with its companion standard ISO/PAS 26183 SASIG PDQ Guidelines for clarifying similarities and differences.

2) For ease of understanding of the PDQ-S: For ease of understanding of the PDQ-S, schema structure employed will be explained first. Then, for easing selection of appropriate criteria, similarity, dependence of shape data quality criteria together with the relationship between threshold and accuracy will be explained.

3) Recommended scenarios of the use of the PDQ: For enabling effective use of the PDQ-S, various scenarios will be presented which include recommended procedure for detecting quality defects and for eliminating them, different usage such as quality requirement representation, quality declaration, quality authorization and harmonization of quality checking systems and quality healing systems. On what criteria to focus depending on target design/manufacturing activity, depending on target object may also be explained.

END

PDQR10-01-07

(Discussion Paper)

Technical Considerations on PDQ-S Extension

May, 2010
Akihiko Ohtaka

Contents

	Page
A. On target discretized shape data	3
1. Types of discretized data	3
2. An analysis of target discretized data	3
3. Conclusion	4
<CAE mesh data criteria>	4
<Point Clouds data quality criteria>	7
B. Expected content of ISO 8000-300	10
C. On the treatment of Sketch, Feature, Parametrics	11
Appendix-1: A scenario of the effective use of the PDQ-S for realizing data quality defect free collaborative product development	13

A. On target discretized shape data

1. Types of discretized shape data

The followings are typical discretized shape data;

(1) Representation of analysis target shape (FEM, FDM, BEM, etc.)

(2) Representation of measured data(point clouds)

(3) Representation of display data

These are all discretized representation of continuous shape (curve, surface, Brep., etc.). The target of AP219 (Dimensional inspection information exchange) may look similar, but it enumerates necessary features and parameters required in dimensional inspection, and represent them by using existing IRs. Other potential applications with regard to discretized data such as spot welding will also deploy similar approach. Therefore, it seems reasonable to restrict our analysis to (1), (2) and (3) above.

2. Analysis of potential target data types

(1) Mesh data for simulation

There are different analysis methods such as Finite Element Method (FEM), Finite Difference Method (FDM) and Boundary Element Method (BEM). Common requirement in any analysis type for the representation of target shape is that the target shape shall be fully covered by nodes and elements with no gap with adjacent elements. If there is a slit within a model, analysis result will become unreliable caused by spill of energy, etc.

(1)-1: FEM mesh data

FEM is a method overwhelmingly used for simulating behavior of mechanical products. The strength of FEM is flexibility of mesh shape but inappropriate mesh shape can cause unreliable analysis results. This can be prevented by using the same mechanisms for preventing inappropriate shape data described in the first edition of ISO 10303-59 because inappropriate mesh shape and inappropriate Brep shape are similar data quality issues. Since the resource model for representing FEM mesh data is standardized in ISO 10303-52, there is no need to define necessary resource models.

(1)-2: FDM mesh data

Use of FDM is limited to various types of flow simulation, diffusion problems, etc. Low flexibility of FDM mesh shape makes the risk of inappropriate shape mesh limited. There is no resource model for the representation of FDM mesh data, thus, we should develop appropriate new resource model for the representation of FDM mesh data if we decide to address the quality of FDM mesh data. However, limited use of the method today makes it difficult to justify the time and efforts required for developing a new resource model.

(1)-3: BEM mesh data

We need to represent boundary of the target shape by discretized data. Since FEM mesh data can be used for the representation of boundaries, there is no need to develop a new resource model.

(2) Measurement data

The phrase ‘point clouds’ is frequently used for representing discretely measurement data. Actual representation of point clouds may simply be a collection of 3D points or a collection of (3D point + surface normal vector) obtained by 5 axis measurement. In any case, geometric_set as defined in ISO 10303-42 can be used. Therefore, it is not necessary to develop a new resource model. The expected precision of measured data, which is measuring machine dependent, can be assumed to be well known by its users. This implies that the risk of problems caused by unexpected quality defect of measurement data is not very high, on the one hand. But, on the other hand, the amount of data sometimes is more than 10 million measured points (ex. whole passenger car measurement case) which naturally requires the check of the appropriateness of the given data by computer programs. Since the use of point clouds is expanding for effectively using them in design process, we understand that there is enough reason to address the quality of point clouds in the new edition of ISO 10303-59.

(3) Display data

Display data is the result of approximating a target continuous shape by a collection of polygons or polyhedrons. Creation of display data is not time consuming and therefore, it can be repeated as necessary with appropriate precision until the result becomes satisfactory. Different from analysis mesh data, entirety and no gap requirements are not high. It is not expected that quality defect of display data causes significant problem. This implies that we do not have enough justification to address quality of display data in our standardization work.

3. Conclusion

It seems appropriate to challenge quality of analysis mesh data (FEM, BEM) and point clouds data in our standardization work.

＜Draft CAE mesh data quality criteria>

The following draft minimum contents of CAE mesh data quality criteria are proposed to stimulate discussions on concrete criteria;

- Tiny element

Problem: In general, CAE mesh data is created by mesh generation systems where automatic algorithms upon some rules are employed. Resulting mesh data may contain small elements, which will cause unexpectedly long analysis time for some computations.

Measurement: In any finite element type, this problem can be measured by detecting an edge smaller than the given tolerance for each element.

- Acute angle

Problem: Existence of a finite element with acute angle smaller than given tolerance (near contraction) is a reason of inaccurate analysis result.

Measurement: In any finite element type, this problem can be evaluated by detecting an angle of a triangular face shape smaller than the given tolerance.

- Warping element

Problem: Warpness of QUAD element or quadrilateral face of PENTA, HEXA, PYRAMID implies inappropriateness of target shape discretization and is a reason of inaccurate analysis result.

Measurement: Calculate two diagonal edges of the quadrilateral face and compare the distance between two edges with the given tolerance

- Skew angle

Problem: Skewed nature of QUAD element or quadrilateral face of PENTA, HEXA and PYRAMID element implies inappropriateness of target shape discretization and is a reason of inaccurate analysis result.

Measurement: Calculate S = (90° - A) where A is the angle in degrees between the two lines joining the opposite middles of the QUAD. If they are not on a plane, take a parallel line of one line passing by a point of the other line. Then compare S with the given threshold. Too-small skew angle suggests that the element is near-degenerate.

- Taper shape

Problem: Tapered nature of QUAD element or quadrilateral face of PENTA, HEXA and PYRAMID element implies inappropriateness of target shape discretization and is a reason of inaccurate analysis result.

Measurement: Divide the QUAD element into two triangles using the first diagonal, and then the same with the second diagonal.

Compute all four areas A_i.

Compute $A_m = 0.25(A_1+A_2+A_3+A_4)$ and $Q = \underset{i}{Max} \; | A_i - A_m | / A_m$

Q = 0 or Q>0.5 may imply inappropriateness of target shape discretization.

- Aspect ratio

Problem: If a finite element has two vertices that are too close, then it is a near degenerate element, which may cause unreliable analysis result.

Measurement: Calculate Ratio = L_{min} / L_{max} where L_{min} is the minimum length and L_{max} the maximum length of the edges of an element and compare Ratio with the given threshold.

- Free Face

Problem: Caused by erroneous computation of automatic mesh generation system, there may be a free face (a face referenced only once) inside a model (Free face shall appear adjacent to boundary curves). If erroneous free face is left uncorrected, it will cause unreliable analysis result. Care should be taken that there are intentional free face cases. Examples are;

- It may be a case for an acoustical and vibrations analysis where the mesh of the solid having vibrations is thin but the mesh of the surrounding fluid for acoustic waves is coarse. In this case, one acoustic element is in front of several mechanical elements.
- If a surface mesh model and a solid mesh model are connected in non-manifold situation, free faces may appear.
- In molten metal flow simulation, a product shape will be discretized by fine finite elements but surrounding die will be discretized by coarse mesh, which leads to the similar situation as the first example.

It will be difficult to differentiate by computer programs whether the detected free faces are intentional cases or not. Therefore, issuance of a warning message will be appropriate.

Measurement: Find free face from the given (solid) mesh model and evaluate whether or not detected faces are adjacent to boundary.

- Free Edge

Problem: Caused by erroneous computation of automatic mesh generation system, there may be a free edge (an edge referenced only once) inside a model (Free edge shall appear at boundary curves). If erroneous free edge is left uncorrected, it will cause unreliable analysis result. Care should be taken that there are intentional free edge cases. By the same reason mentioned above, issuance of a warning message will be appropriate

Measurement: Find free edge from the given (surface) mesh model and evaluate whether or not detected edges are along boundary.

- Unevenness of mesh size

Problem: Unevenness of a surface mesh in size with that of adjacent ones will cause unreliable analysis result.

Measurement: Calculate L_{max1} / L_{min2} where L_{max1} is the length of the maximum edge of this element and L_{min2} is the length of the minimum edge of the next element and compare it with the given threshold.

- Model size too big

Problem: Too big model size caused by erroneous mesh generation will lead to unexpected calculation time and cost. Appropriate model size depends on the problem to solve (ex. Collision analysis of a whole passenger car will require 10 million points), Therefore, issuance of a warning message to prevent wrong software algorithm will be appropriate.

Measurement: Evaluate if the number of nodes is greater than the given threshold value.

- Wrong Jacobian

Problem: For any volumetric finite element model, too large range of variations of the Jacobian implies too large distortion of the model, which leads to an unreliable analysis result.

Measurement: Evaluate Ratio = J_{max} / J_{min} where $J(u_i,v_i,w_i)$ for i = 1 to r at the r points by the reduced integration method and compare the Ratio with the given threshold.

- Middle point deviation

Problem: When an edge is defined by three nodes, the intermediate node should not be too far from the middle point between the first and the third nodes. Concerned elements are: isoTRIA6, isoQUAD8, isoTETRA10, isoPENTA15, isoPYRAMID13, and isoHEXA20.

Measurement: Calculate Ratio = D / L where D is the distance from the intermediate node to the line going from the first node to the third node and L is the distance from the first node to the third node and compare the Ratio with the given threshold.

- Wrong middle point alignment

Problem: When an edge is defined by three nodes, the intermediate node should not be too far from the middle between the first and the third node. Concerned elements are: isoTRIA6, isoQUAD8, isoTETRA10, isoPENTA15, isoPYRAMID13, and isoHEXA20.

Measurement: Calculate Ratio = A / L where A is the distance between the projection of the intermediate node to the line going from the first node to the third node and the middle point between the first and the third node and L is the distance from the first node to the third node, and compare the Ratio with the given threshold.

＜Draft Point Clouds data quality criteria＞

Different from physical measurement for the purpose of inspection, representation of the target shape itself by sufficiently fine measured data is becoming important from various points of view such as improvement of a CAD data by comparing it with the measured data obtained by measuring physical object corresponding to the CAD data, quick reflection of physical change to the corresponding CAD data by the use of measured data for the changed portion, reflection of expert engineer's expertise incorporated in a physical object into corresponding CAD model(so called 'reverse engineering') , etc.

We will treat this type of measured data as an extension to PDQ-S. Data quality concerns vary depending on the purpose of the use of measured data. Transformation of measured data into free form surface model and deformation of existing surface model by referring measured data are two major target applications. The situation will be significantly different whether we treat measured data just after the completion of measurement or after some processing by computer systems. The latter will include quality of software algorithm which is out of scope of our activity. Therefore, we will mainly treat the former, namely, measured data just after the completion of measurement.

The following criteria will be least necessary set for treating quality of point clouds;

- Too many data

Problem: Appropriate amount of data depends on intended application. For example, fine measurement of a whole passenger car will require 10 million points. If the amount of measured data significantly exceeds the amount expected from intended application, it will cause troubles such as unsuccessful visualization.

Measurement: Check whether the given amount of measured data is bigger than given value or not.

- Unreliable quality of measured data

Problem: If unevenness of the measured data is significant, it is not possible to judge what shape is represented by the given data.

Measurement: Judge the unevenness by a geometric method or by a statistic method.

- Significant noise data

Problem: Measured data naturally includes noisy data, which is the data located more than the given tolerance apart from the expected location. If the amount of noisy data is significant, it will cause unsuccessful data processing.

Measurement: Find singular points by calculating the envelop space where majority of points belong and the distance from each point to the space.

- Significant fine/coarse variation

Problem: This kind of unevenness of point distribution naturally occurs at transition portion from curved shape to planar shape. If this type of unevenness occurs at unexpected portion, it will cause wrong data processing.

Measurement: Calculate aspect ratio of the distance between neighboring points, and compare it with the given threshold.

- Significant deviation of duplicating two sets of measured points.

Problem: Assuming the result of one time measurement is represented by one geometric_set, whole measurement of a physical object to cover it entirely frequently require two or more geometric_sets. In order to prevent potential gap, two adjacent geometric_sets will have some duplication. If the distance from one geomertric_set to the other geometric_set is larger than the given tolerance at duplicated portion, it will make it difficult to estimate the shape of the physical object.

Measurement: Calculate distance between two geometric_sets and compare it with the given threshold.

- Measured data is missing(at concave portion or at marker)

Problem: Lack of measured data at necessary portions where physical object is existing will cause wrong data processing. This kind of problem naturally occurs at concave portion or at marker position. Wrong measurement may cause lack of data at usual locations.

Measurement: Boundary of a physical object can easily be judged from the continuity of measured data. Discontinuity of measured data inside of a physical object at a non-concave portion or at a non-marker position is problematic.

- Difficulty of Character Line identification

Problem: It is very difficult to extract Character lines from measured data. They are represented on CAD surfaces as important characteristics of product shape from conceptual design point of view. However precise extraction(or estimation) of character lines from measured data is technically infeasible with today's measurement technology regardless of measurement methods. This limitation of today's measurement technology significantly decreases usability of the measured data.

- Existence of irregular data

Problem: Irregularity of measured data, which frequently occurs at around product end or hole. If used uncorrected, it will cause wrong data processing.

Measurement: Run noise data detection process at those locations.

B. Expected content of ISO 8000-300

Those to be described in ISO 8000-300 are the followings.

(1) The situation of ISO 8000-300 within whole ISO 8000

(2) How to understand the relationship between ISO 10303 standards which treat nominal representation of product model data and PDQ related standards (ISO 10303-59, ISO 10303-59+, ISO 8000-3xx). This may be called as 'PDQ Big Picture'.

(3) Identification of entire PDQ related standards within SC4 (including ISO 10303-59, ISO/PAS 26183), characteristics of each of them, and mutual relationships.

(4) Compared situation of ISO 8000-3xx and PDQ related standards under ISO 10303.

(5) Big Picture (future goal) of entire PDQ related standards including under ISO 10303 and under ISO 8000.

An analysis for each requirement above is;

(1) It is possible to clearly write down.

(2) ISO 10303 standards aim at precise representation of product model data and no specification is given on the quality of data instance when it is implemented by finite number of effective digits. Industries use ISO 10303 implemented within CAD, CAE, CAM systems. Each CAD, CAE, CAM system is based on its own design principle and the guarantee of the number of effective digits is system dependent. Therefore, data exchange between two different CAD systems, each claiming conformance to ISO 10303, may well results in unsuccessful result caused by data quality problem. It is a common recognition of manufacturing industry including automotive industry and aerospace industry, that unexpected return to previous processes and rework/repair of data caused by quality defect are major reasons of inefficient product development and enormous economy loss, which drastically decrease the effect of big investment on 3D engineering systems. PDQ related standards aim at drastically decreasing or eliminating data quality problems.

    Pragmatic explanation as described above is rather easy. An explanation from data modeling point of view may not be impossible but hard consensus building is expected since there could be two or more different ideas or approaches.

(3) Today's situation can be clearly written.

(4) It is possible to write some principles.

(5) The core principle of standard development is that there shall be strong user needs and support, and that international standardization shall be appropriate. We can not say today that we have completely captured clear needs of international standardization for each constituent of product related data. Not even user

industries such as automotive industry and aerospace industry can clarify future goal of data quality problems in a precise level. This situation will not change in the near future. This shows that the creation of a big picture of PDQ related standards is too early to challenge today.

Above described analysis shows that we can include all the required contents except that corresponding to requirement-(5).

After some discussion within JNC, we have decided to these in ISO 8000-311.

C. On the treatment of Sketch, Feature, Parametrics

<Sketch>

We focus on an aspect of 'Sketch' usage not as a tool to represent variable drawings but as a tool to represent variable section geometry within the context of parametric 3D shape modelling (SASIG PDQ Guidelines also takes the same view point).

Since corresponding resource model exists(ISO 10303-108), there will be no difficulty to address sketch data quality in our activity though its necessity seems low.

Even if a Sketch involves quality defects such as incomplete constraint (over-constraint, under-constraint), that quality defect will quickly be detected and easily corrected when the sketch is used in solid modeling activity. This implies that the risk of the propagation of the quality defect to down stream processes is quite low.

<Feature>

Necessary application features are defined in AP level separately without any common mechanism. This situation is caused by unsuccessful development of generic feature resource model: ISO 10303-48. Implementation of features in any commercial CAD system is not far from macro-shape level, which is quite unsatisfactory from the original feature concept to represent and share design/manufacturing semantics. Though the JAMA's PDQ deployment status report says that three companies are using 'Unresolved feature creation', it is not feasible to challenge from cost/time point of view, since we are required to develop a generic feature resource model from scratch, which will require huge time and cost.

<Parametrics>

There is no difficulty to treat quality of parametric model data since resource models (ISO 10303-55, 108, 109, 111) are completed and existing. We would rather try to add related criteria for promoting deployment of these parametrics standards.

The JAMA's PDQ deployment status report describes its usefulness by reporting that

Missing construction history: 2 companies

Non-evaluated construction history: 5 companies

We will try to enumerate necessary criteria including these two. Least necessity will be:

- Missing Brep modeling construction history

Problem: Construction history corresponding to current Brep model is missing. If left missing situation, there is no way to judge whether or not the current Brep model is a correct one conforming to the intent of the originator.

Measurement: Check one to one correspondence of Brep model and construction history.

- Re-construction results in error

Problem: Erroneous termination of re-construction implies that validation of it against Brep model is not possible and parametric design change is also not possible.

Measurement: Report the reason of the erroneous re-construction by receiveing related information from the target CAD system.

- Inconsistency of a construction history and the pertaining Brep model

Problem: A Brep model obtained by re-construction and the Brep model given do not coincide. This inconsistency creates uncertainty about the correctness of the given model.

Measurement: Check coincidence of two Brep models, one obtained by re-construction and the other given, and report the difference.

Appendix-1: A scenario for the effective use of PDQ-S for realizing data quality defect free collaborative product development

We believe that satisfaction of the following three requirements is essential for realizing quality defect free collaborative product development;

a. Do not create bad quality data (Data causing troubles in downstream processes = narrow, indirect definition)
b. Do not receive bad quality data
c. Do not propagate bad quality data

In order to promote satisfaction of these requirements, corresponding burden of users' activity for that purpose shall not be significant and the mechanism which guarantees automatic satisfaction of these requirements when engineers work on well defined procedure is required.

1. The receiver of data shall check quality of received data against criteria and thresholds which are mandatory to smoothly process his job. Who is responsible when some quality defects are detected depends on whether the received data is directly used or used after necessary transformation. Therefore,

(1) Whether data transformation was performed or not, and

(2) The transformation S/W product and its version if used

shall be recorded.

2. When quality defects are detected,

(1) Order organization/department/data name

(2) Quality criteria and thresholds against which those quality defects are detected and detailed inspection results

(3) Whether data transformation was necessitated or not

shall be recorded.

3. If the same record exists in the past records,

(1) A report to the order company / person showing detailed inspection results is required since there is a possibility that the order company/person is not aware of inappropriate job processing which caused those defects.

(2) If the level of quality defect is significant and continuation of his job is not possible, he shall ask the order company/person to re-issue the data.

(3) If the level of quality defect is not significant, he can improve the data before commencing his job. But, how he changed the data shall be precisely recorded because he is now responsible for the whole data.

4. At the appropriate timings of his job, quality of the latest data shall be checked.
(1) If quality defects are found, data name quality defects(criteria/thresholds/accuracy and inspection results) shall be recorded.
(2) If there is the same record in the past records as the one detected now, he should look back his work from appropriateness of design/modeling, appropriateness of work procedure, appropriateness of CAD usage and defects of CAD system points of view.

By standardizing work process as defined above and by honestly following the process, quality of work flow, quality of technical work itself, relationship of order /ordered companies will gradually improve and the realization of the requirements-a, b, c will be promoted.
The followings are summarized activities required for order person, ordered person and CAD vendors.
<Order person>
Analysis of quality defects reported from the ordered company/person shall be done for knowing the real reasons why the similar quality defects have been repeated. Potential reasons are;
1) Inappropriateness of work flow or design/modeling process
2) Problematic design method of individual designer or problematic way of using CAD system(s).
3) Inappropriateness or bugs of the CAD functions used.
<Ordered person>
0) Data transformation applied for the given data may be causing detected quality defects. In this case, involvement of the data transformation S/W vendor is required. If the defects detected are vendor's responsibility, the vendor shall provide the improved version.
1), 2), 3) ----- Same as those in <Order person>
<CAD vendor>
Confirm at first the occurrence of quality defect identified by the user by using the same data, same work process on the same circumstances, then identify what function is causing the defect. Bug fix of individual function is a happy case. If the defect is caused by inappropriate numerical precision control mechanism, fix of the issue will take longer time and efforts.

END

A scenario of the effective use of PDQ-S for realizing data quality defect free collaborative product development(A1 – A3)

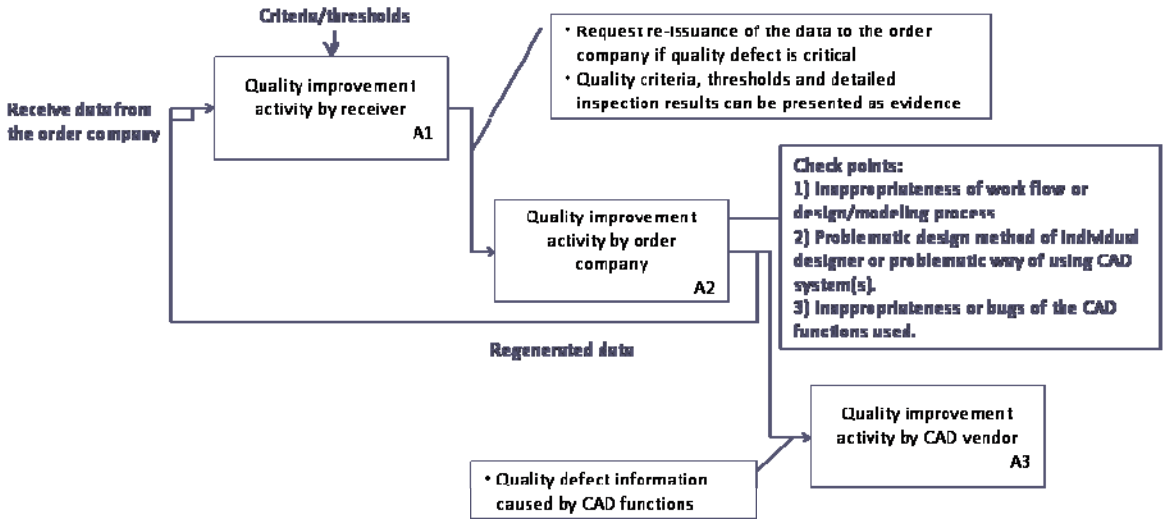

Quality improvement activity by receiver(A1)

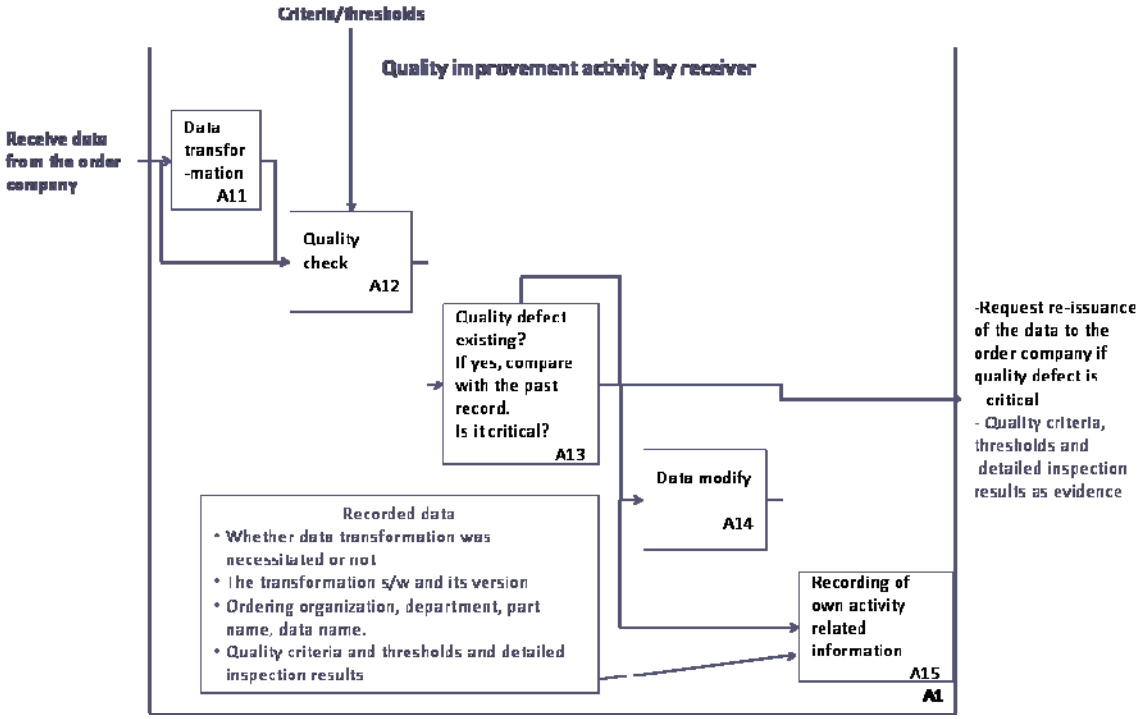

(Discussion Paper)

Business-condition-oriented data quality criteria

2010/5/31 H. Hiraoka

Japan PDQ-S development team

1. Introduction

Data quality criteria based on business conditions are defined in SASIG PDQ Guidelines, but are not included in ISO 10303-59 PDQ-S. These criteria should also be treated in SC4 standard as they are large in number and have strong requirements from users. These criteria are used based on agreement between organizations, each agreed in each case, and hence, the measurement requirements and thresholds for these criteria cannot be described explicitly.

2. Business-condition-oriented data quality criteria

Table 1 shows business-condition-oriented data quality criteria defined in SASIG PDQ Guildelines that are used by multiple JAMA companies. The name of the criteria, its SASIG code, the element to be inspected, its data type and the corresponding measurement are described. The contents are still to be elaborated but measurement in many criteria depends on an external rule defined by the sender and receiver of the data on each case of exchange.

Table 1 Frequently used business-condition-oriented SASIG data quality criteria

criteria	code	Inspected element	Data type	measurement	judgement	comments
2.1.1 Non-standard CAD version	O-CM-CV	CAD system	version	check if consistent with external rule	FALSE	Out of scope because our standard deals with the quality of contents of model.
2.1.3 Non-standard accuracy parameter	O-CM-AP	accuracy	real	check if in the range defined by external rule	FALSE	
2.1.6 Special character used in CAD model name	O-CM-SC	name of CAD model	character	check if special character	TRUE	
2.1.7 Non-standard item name	O-CM-IN	name of item	string	check if consistent with external rule	FALSE	
2.1.8 Non-standard physical file name	O-CM-PN	name of physical file	string	check if consistent with external rule	FALSE	Out of scope because our standard deals with the quality of contents of model.
2.1.11 Item data	O-CM-IC	item data		check if	FALSE	

consistency incorrect				consistent with external rule		
2.1.14 Unused encapsulated entities present	O-CM-UP	entity		check if encapsulated and unused	TRUE	
2.1.18 Inconsistent item reference	O-CM-IR	item reference		check if valid reference	FALSE	
2.2.9 Non-standard layer usage	O-GL-LU	layer	element	check if consistent with external rule	FALSE	
2.2.11 Layer group used	O-GL-GL	layer group	number	count	>0	
2.2.13 Non-standard layer group	O-GL-LA	layer group	layer	check if consistent with external rule	FALSE	
2.3.2 Non-reference co-ordinate system active	O-CS-NR	reference co-ordinate system		check if active	FALSE	
2.3.3 Non-standard co-ordinate system orientation	O-CS-NO	co-ordinate system	orientation (left- or right-hand)	check if consistent with external rule	FALSE	
2.3.5 Non-standard unit	O-CS-SU	part unit system		check if consistent with external rule	FALSE	
2.3.6 Non-standard scale	O-CS-SS	part scale	real	check if consistent with external rule	FALSE	
2.4.1 Assembly relationship used	O-AR-AR	assembly	number	count	>0	
2.5.2 History not updated	O-SO-HU	modeling history		check if updated	FALSE	To be dealt in parametrics
2.6.1 Unresolved feature used	O-FE-UF	feature		check if correctly resolved	FALSE	To be dealt in feature
2.7.2 Unused element present	O-EL-UE	element		check if used in product shape	FALSE	
2.8.6 Non-standard element visibility	O-PR-VE	visibility status of element		check if consistent with external rule	FALSE	

3. Modeling principles

The following principles are adopted to deal with the business-condition-oriented data quality criteria shown in Table 1.

(1) The criteria is represented in an application module instead of a resource model

These criteria are not described based on a clear technical base. Their measurement requirements and assessments do not have a general applicability. Because of these features, these criteria are difficult to be represented in a resource part. Instead, we have decided to develop a new application module for these criteria.

(2) The module is developed as an extension of Product_data_quality_criteria module and Product_data_quality_inspection_result module.

Some business-condition-oriented criteria are not related to shape. Even if they are related to shape, their contents are difficult to be specified clearly in technical viewpoints. For this reason, the module is developed not as an extension of Shape_data_quality_criteria module and Shape_data_quality_inspection_result module, but as an extension of Product_data_quality_criteria module and Product_data_quality_inspection_result module, or modules of general product data quality.

(3) Measurement of the criterion refers to external documents.

Prior to each data exchange using business-condition-oriented criteria, their contents concerning how to measure the quality and how to assess it are agreed between senders and receivers of the data. Thus, the measurement requirements are defined to refer an external documents on the agreement.

4. Proposed model

A model shown in Figure 1 is proposed based on the principles described above. Following are the points.

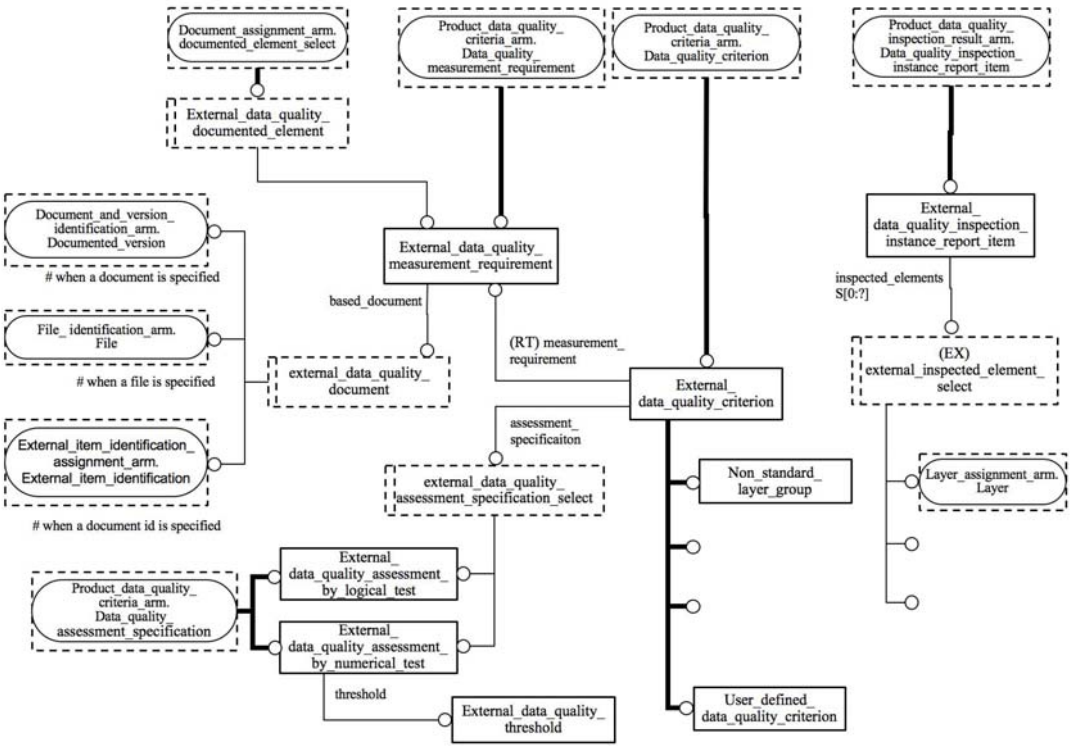

Figure 1 Model for product data quality depending on business conditions

(1) External reference of measurement requirements

The entity External_data_quality_measurement_requirement represents the measurement requirement for business-condition-oriented data quality criterion. It refers to the external documents. As the ways of reference, a document, a file or the identification of a document can be selected. (See Figure 2 for external reference mechanism in existing modules.)

(2) Assessment

Logical assessment and numerical assessment can be selected, though the numerical ones where the measured quality is evaluated against a predefined threshold are supposed to be rare for business-condition-oriented criteria.

(3) Inspected element

As it will be enough to identify which element has a low quality for business-condition-oriented criteria, the representation of detailed portion are omitted where the problem occurs in the inspected element.

5. Development of criteria

As an example of business-condition-oriented data quality criteria, Non_standard_layer_group is shown in figure 1. To develop a business-condition-oriented data quality criterion, the following is to be specified.

(1) Representation of the criterion

The criterion is represented as a subtype of External_data_quality_criterion entity.

(2) Inspected element

Inspected element for the criterion is represented as a selection of extensible select type external_inspected_element_select

(3) External document type

A constraint is added to the criterion on external_data_quality_document select type to restrict the type of external document whether it is specified as a document, a file or the identifier of a document.

(4) Assessment type

A constraint is added to the criterion on external_data_qaulity_assessment_specification_select select type to select whether the type of assessment is logical or numerical.

6. Remaining work

The following work is required to develop the proposed module.

(1) Verification of the model

Checks are required if the model is correctly defined and has enough functionality.

(2) Development of criteria

For each criterion, the explanation, its constraints, the identification of related elements such as inspected elements and the requirements for external referenced document should be developed.

(Reference) Modules and entities relating to external reference

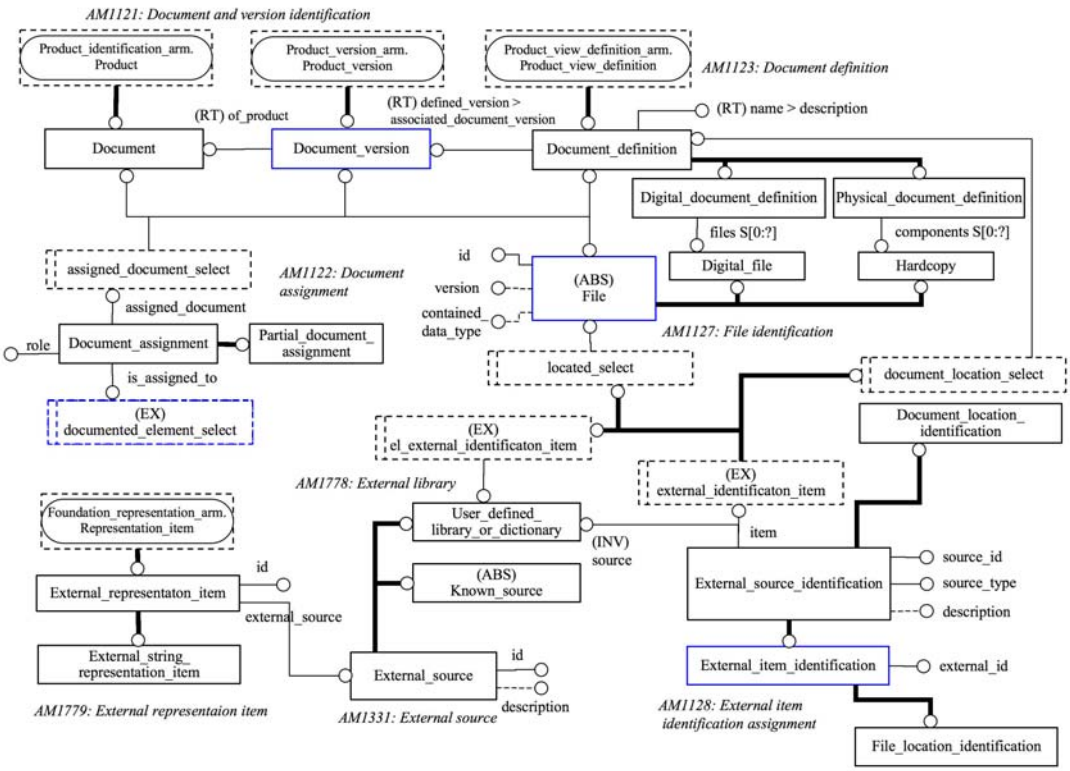

Figure 2 Modules relating to external reference

Example Instances of Business Condition Oriented Criteria

New Module related with
ISO 10303-59 ed2

2010/5/12 Hiraoka

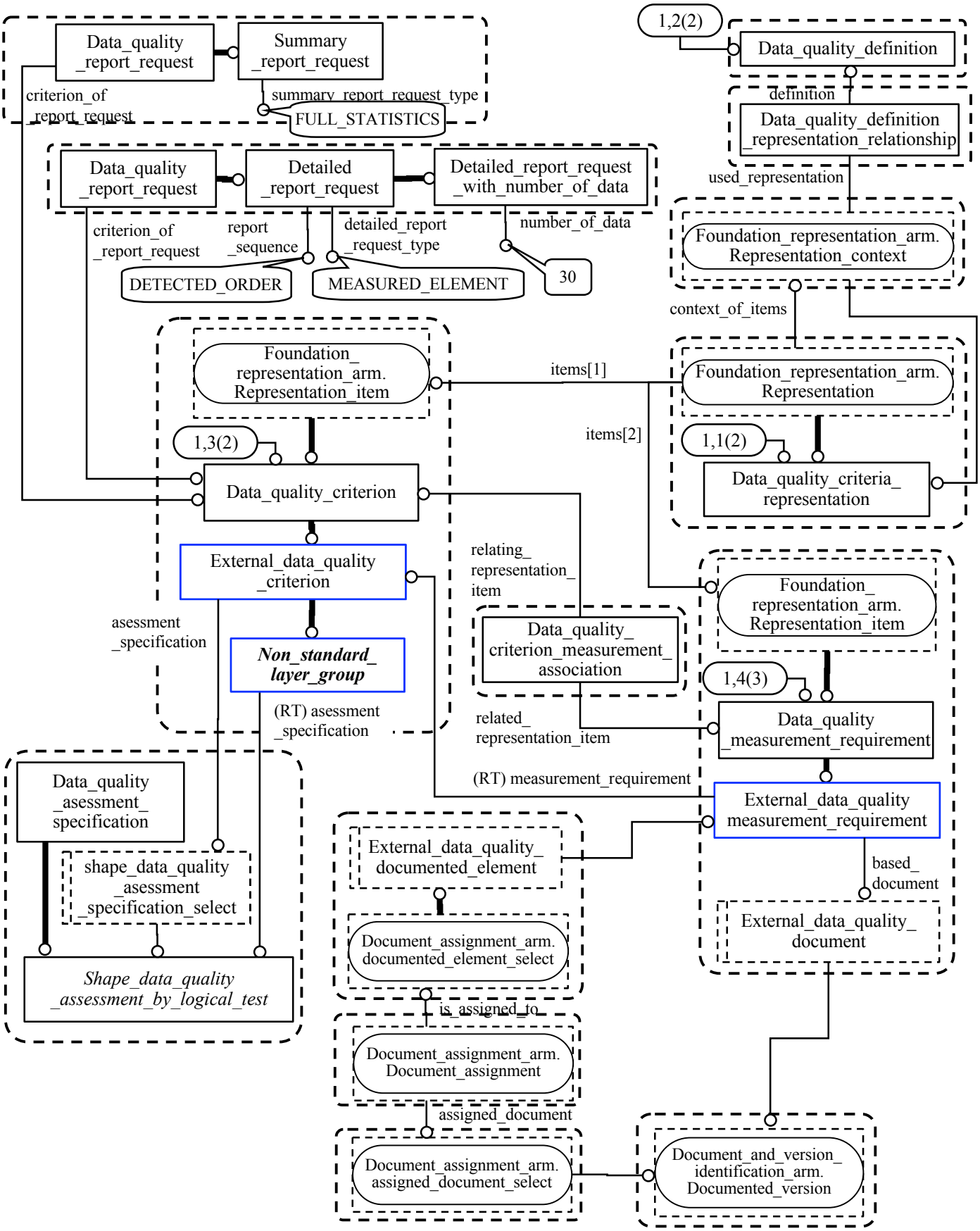
Data_quality _report_request
Summary _report_request
criterion_of _report_request
summary_report_request_type
FULL_STATISTICS
1,2(2)
Data_quality_definition
definition
Data_quality_definition _representation_relationship
used_representation
Data_quality _report_request
Detailed _report_request
Detailed_report_request _with_number_of_data
criterion_of _report_request
report _sequence
detailed_report _request_type
number_of_data
DETECTED_ORDER
MEASURED_ELEMENT
30
Foundation_representation_arm. Representation_context
context_of_items
Foundation_ representation_arm. Representation_item
items[1]
Foundation_representation_arm. Representation
items[2]
1,3(2)
1,1(2)
Data_quality_criterion
Data_quality_criteria_ representation
External_data_quality _criterion
relating_ representation_ item
Foundation_ representation_arm. Representation_item
asessment _specification
Non_standard_ layer_group
Data_quality_ criterion_measurement_ association
1,4(3)
(RT) asessment _specification
related_ representation_item
Data_quality _measurement_requirement
Data_quality _asessment_ specification
(RT) measurement_requirement
External_data_quality measurement_requirement
External_data_quality_ documented_element
shape_data_quality _asessment _specification_select
based_ document
External_data_quality_ document
Document_assignment_arm. documented_element_select
Shape_data_quality _assessment_by_logical_test
is_assigned_to
Document_assignment_arm. Document_assignment
assigned_document
Document_assignment_arm. assigned_document_select
Document_and_version_ identification_arm. Documented_version

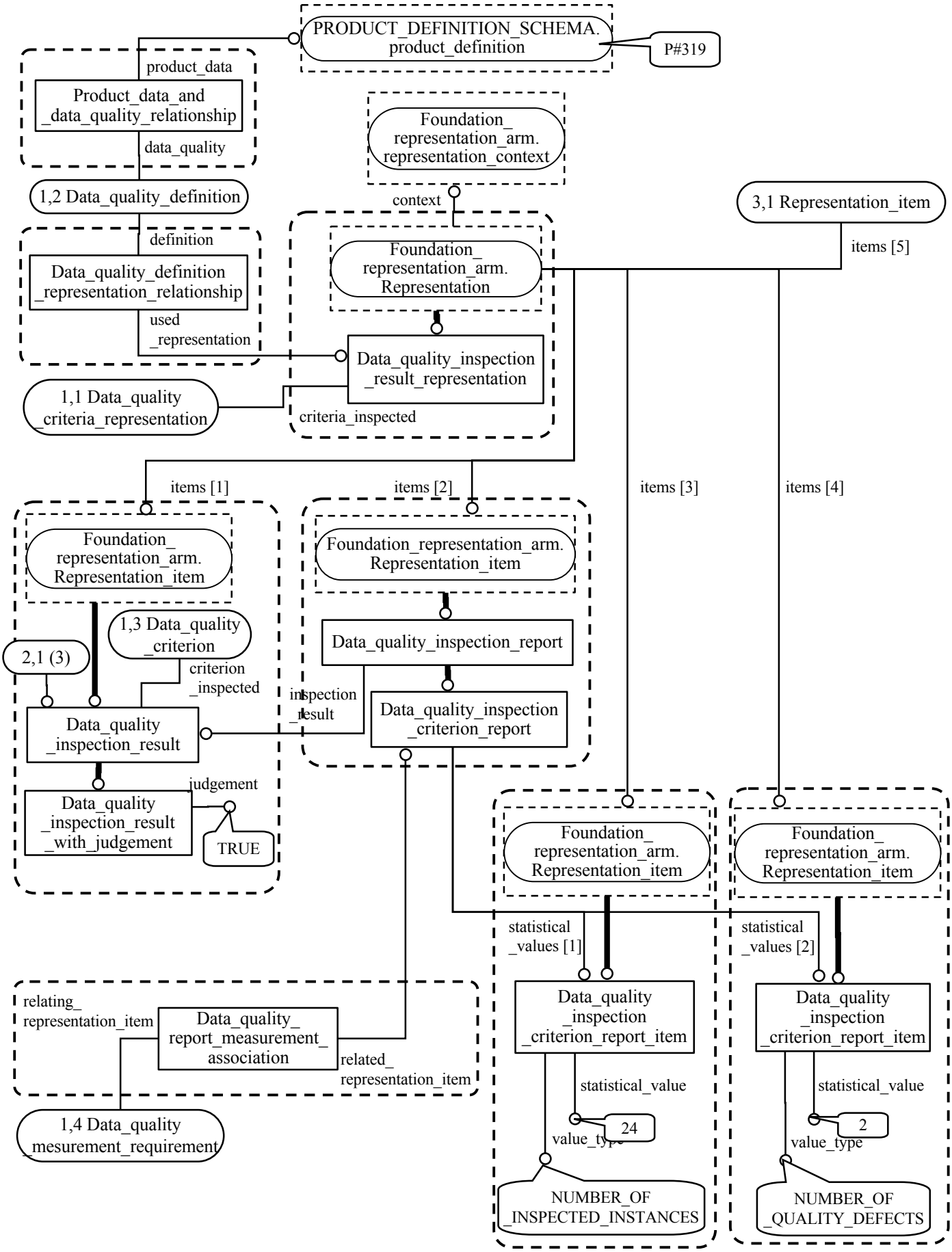
PRODUCT_DEFINITION_SCHEMA.
product_definition
P#319
product_data
Product_data_and
_data_quality_relationship
data_quality
Foundation_
representation_arm.
representation_context
1,2 Data_quality_definition
context
3,1 Representation_item
definition
Data_quality_definition
_representation_relationship
Foundation_
representation_arm.
Representation
items [5]
used
_representation
Data_quality_inspection
_result_representation
1,1 Data_quality
_criteria_representation
criteria_inspected
items [1]
items [2]
items [3]
items [4]
Foundation_
representation_arm.
Representation_item
Foundation_representation_arm.
Representation_item
1,3 Data_quality
_criterion
2,1 (3)
criterion
_inspected
Data_quality_inspection_report
inspection
_result
Data_quality_inspection
_criterion_report
Data_quality
_inspection_result
judgement
Data_quality
_inspection_result
_with_judgement
TRUE
Foundation_
representation_arm.
Representation_item
Foundation_
representation_arm.
Representation_item
statistical
_values [1]
statistical
_values [2]
relating_
representation_item
Data_quality_
report_measurement_
association
related_
representation_item
Data_quality
_inspection
_criterion_report_item
Data_quality
_inspection
_criterion_report_item
statistical_value
statistical_value
24
2
value_type
value_type
1,4 Data_quality
_mesurement_requirement
NUMBER_OF
_INSPECTED_INSTANCES
NUMBER_OF
_QUALITY_DEFECTS

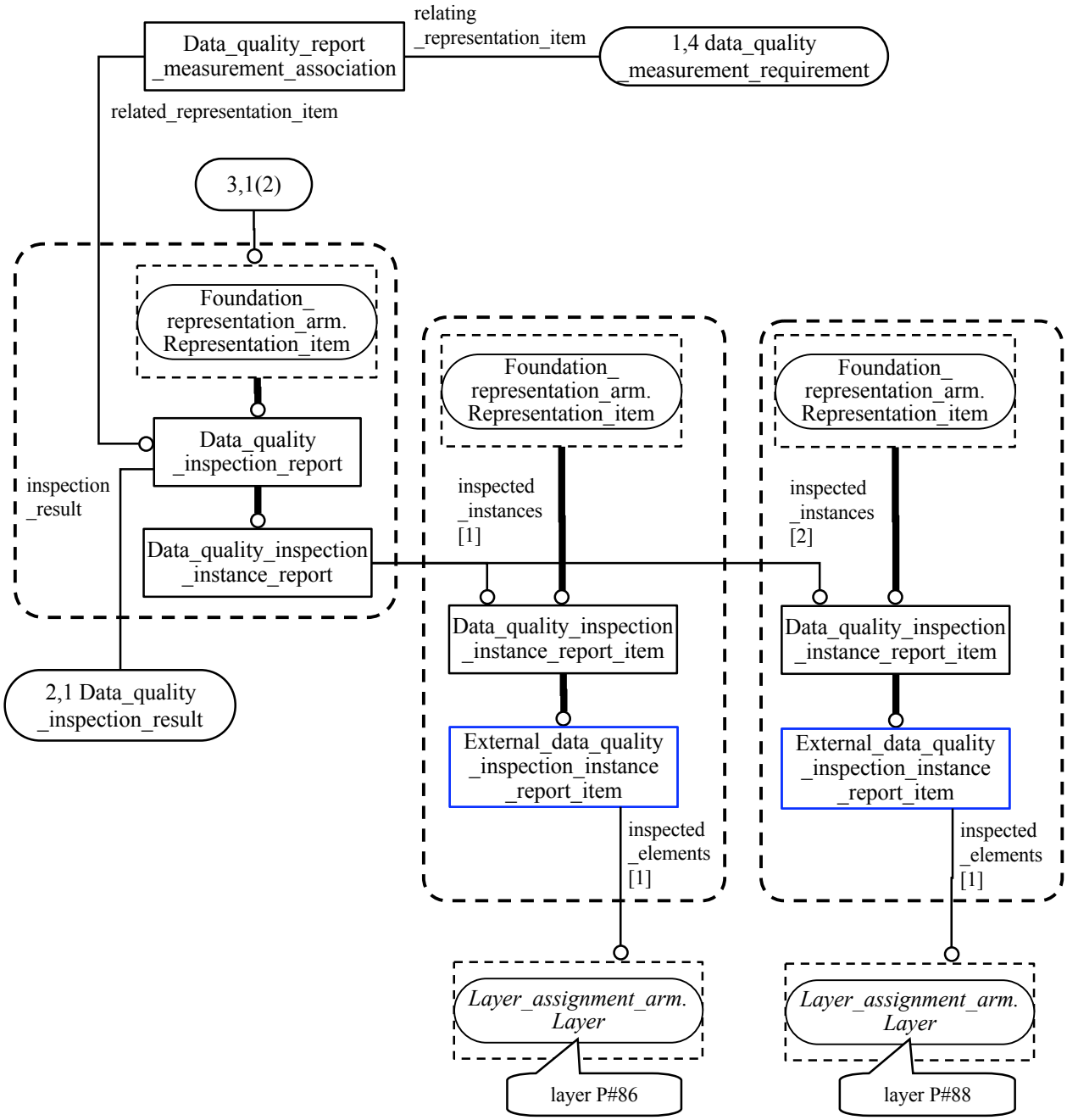
Data_quality_report
_measurement_association
relating
_representation_item
1,4 data_quality
_measurement_requirement
related_representation_item
3,1(2)
Foundation_
representation_arm.
Representation_item
Data_quality
_inspection_report
inspection
_result
Data_quality_inspection
_instance_report
2,1 Data_quality
_inspection_result
Foundation_
representation_arm.
Representation_item
inspected
_instances
[1]
Data_quality_inspection
_instance_report_item
External_data_quality
_inspection_instance
_report_item
inspected
_elements
[1]
Foundation_
representation_arm.
Representation_item
inspected
_instances
[2]
Data_quality_inspection
_instance_report_item
External_data_quality
_inspection_instance
_report_item
inspected
_elements
[1]
Layer_assignment_arm.
Layer
layer P#86
Layer_assignment_arm.
Layer
layer P#88

第2回委員会（7月28日）

平成 22 年度　第 2 回 PDQ 国際標準化要件検討委員会

1.　日　時　　2010 年 7 月 28 日(水)　14 時－17 時

2.　場　所　　機械振興会館 4 階　JIPDEC 第 3 会議室

3.　議　題　　・新PDQのNWI提案内容
・GD&Tの検討状況
・長期データ保存の検討

4.　配布資料

- PDQR10-02-01：平成 22 年度第 1 回 PDQ 国際標準化要件検討委員会　議事録
- PDQR10-02-02：LOTAR Executive Summary
- PDQR10-02-03：Questions and Answers on LOTAR
- PDQR10-02-04：Technical Considerations on PDQ-S Extension（大高）
- PDQR10-02-05：Business-condition-oriented data quality criteria（平岡）
- PDQR10-02-06：Expected contents of ISO 8000-311（相馬）
- PDQR10-02-07：Status of PDQ Standard Extension（大高）
- PDQR10-02-08：A Validation Technology for 3D CAD Data（相馬）
- PDQR10-02-09：PMI Quality Validation（D. Cheney）
- PDQR10-02-10：Error Type of PMI Quality Validation（D. Cheney）
- PDQR10-02-11：PMI Quality Validation 検討（PDQ 規格開発委員）
- PDQR10-02-12：スタンレー電気宿題回答（小形）
- PDQR10-02-13：各 OEM PDQ 展開項目一覧（多賀）
- PDQR10-02-14：JAMA/JAPIA　PDQ タスク会議資料（多賀）

以　上

平成 22 年度　第 1 回 PDQ 国際標準化要件検討委員会　議事録

日　時：6 月 2 日(水)　14 時－17 時
場　所：機械振興会館 4 階　JIPDEC 第 4 会議室
出席者：委員長　大高哲彦(NUL)
委員　平岡弘之(中央大)、菊地慶仁(北海学園大)、小林一也(富山県立大)、田中文基(北海道大)、坂本千秋(MER)、石川義明(MER)、田中敬昌(DIPRO)、多賀和春(ホンダ)、小形充生(スタンレー電気)、松永三夫(日立)、三富一弘(MHI)
事務局　鈴木　勝(JIPDEC/DUPC)
（順不同、敬称略）　13 名

配布資料：
- PDQR10-01-01：平成 22 年度 PDQ 国際標準化要件検討委員会　委員名簿
- PDQR10-01-02：平成 22 年度 PDQ 国際標準化要件検討委員会　実施計画書
- PDQR10-01-03：平成 21 年度第 5 回 PDQ 国際標準化要件検討委員会　議事録
- PDQR10-01-04：Status of PDQ Standard Extension（大高）
- PDQR10-01-05：Expected contents of ISO 10303-59 Edition-2（平岡）
- PDQR10-01-06：Expected contents of ISO 8000-311（相馬）
- PDQR10-01-07：Technical Considerations on PDQ-S Extension（大高）
- PDQR10-01-08：Business-condition-oriented data quality criteria（平岡）

議　事：

1.　配付資料の確認（事務局）
- 本年度第 1 回目のため、委員名簿と実施計画書を配布する。

2.　はじめに（大高委員長）
- 前回までは、規格開発委員会の検討状況があまり説明できていなかったが、今回の資料でかなり詳しく説明する。
- 来週の SC4/Bethlehem 会議の Open Technical Forum（OTF）のテーマは"Processes for ensuring data quality"であり、日本から自分が PDQR10-01-04 を発表し、相馬さんが自社の 3 次元データの validation technology について発表する。
- PDQR10-01-05～-07 は公開してよい資料なので、工業会の中での検討に使ってください。
- PDQR10-01-08 は、多賀さんの資料にあった PDQ ガイドラインの未対応の重要項目をなるべく取り込むための仕組みである。これにより新 PDQ 規格では、SASIG PDQ Guidelines の中で残っていた FEM データ、測定データおよびビジネス条件依存項目を取り上げるので、あと残っているのは quality stamp くらいである。

3.　Status of PDQ Standard Extension（大高、PDQR10-01-04）
- Drawing は取り上げない。
- 新 PDQ 規格の NWI 投票が開始されたが、各国への根回しの結果、8 ヶ国（米、仏、独、ノルウェー、スペイン、ポルトガル、韓国、日本）からの expert 登録が見込まれる。
- Appendix の内容を小形さんにチェックしてもらいたい。

(小形)データを受け取ってから使うまでには必ず何らかのデータ変換が発生するが、それをどのように運用するかが重要である。
→(大高)データ変換の詳細な記録を残す必要がある。
→(小形)データ授受ではお互いにデータの品質を把握しておく必要があり、データを提供する側もデータの品質を明確にし、データと一緒に受領側に渡すべきである。また、PDQ-S 規格に準拠すれば、両者の結果の差が少なくなることを期待しているが、その際の違いが認識できるようにすることが重要である。
(菊地)スライド 12 の A13 の上から出力線が出ているのは IDEF0 図としてはおかしい。そのほかに本日出た改善意見を反映した改訂版を送る（6/3 に配布された）。

4.　10303-59 ed2 の概要（平岡、PDQR10-01-05）
(大高)Assembly/Parametrics については、SASIG PDQ Guidelines ではこれらの有無しか取り上げていないが、もっと技術的なレベルでの品質を取り上げる必要がある。
(大高→田中敬昌)PDQ-S モジュールはほぼできているので、AP242 ですぐに使える。

5.　8000-311 の概要（相馬委員欠席のため大高委員長が紹介、PDQR09-05-06）
- JAMA/JAPIA の皆さんには、この内容で役に立つかを判断していただきたい。

(田中敬昌)これに従ってベンダが実装してくれるのなら役立つ。

6.　新 PDQ 規格の技術内容の説明（大高、PDQR09-05-07）
- ここで取り扱う測定データとは、製品全体を覆うような点群データのことである。
- メッシュデータの品質を取り扱うだけなので、解析データの品質を取り扱うとは言わない。
- 測定機にはノイズデータを除去する機能があるが、特別な目的のためのソフトウェア処理はあり得る。
- 必要と思われる機能を挙げてみたが、エンドユーザに近い委員の皆さんは、自社やそれぞれの工業会のニーズからみて足りない機能があれば言っていただきたい。

(小林)FDM のリソースモデルとして Part 42 の volume が使えないか。
→(大高)element data は作れるが、table が作れないので無理だと思う。
(松永)測定データについては JEITA でも検討を開始している。測定する現物と CAD データを比較する際の基準座標をどうとるべきか。通常両者の座標系は異なるので、基準座標の取り方で比較結果に違いが出ると思う。
→(大高)車全体を測定する場合の座標系は一意に決められるが、部品の測定ではそうはいかない。測定データにソフトウェア処理を加えると評価しづらいので、できるだけ生に近いデータを対象としたいが、その場合は座標系の選択の考慮が必要になるかもしれない。ノイズを除去した測定データの包絡体を作って合わせる方法がある。
→(松永)適切な評価結果を得るためには、CAD 側でどういう指示が必要かを知りたい。
→(大高)自動車の関係者からはそれについて聞いたことがない。
→(松永)精密機器は小さいものが多いので精度が問題になる。最良の測定機の精度は 0.02mm 程度である。
→(大高)自動車の方を調べてみるが、JEITA の見解をまとめて、次回くらいに教えてほしい。CAE データの場合はあまり厳密でなくてもよいが、測定データの方が要求は厳しい。
(小形)測定データの不具合が問題になる場合を知りたい。
→(大高)本日の資料に書いてある範囲で不十分か。
→(小形)自社で測定データと CAD データの比較を試みたことがあるが、あまりに大変なので、今は顧客に納品する際に決められた点だけの誤差を検査データとして出しているだけである。できた物を測定するとそのままでは CAD データと絶対基準が合わないので、金型の検査では一番直しにくい曲面の方を正として、その他の部分を直しているようだが、その過程でどのような問題が起きているのかは認識していない。
→(大高)自動車業界のユーザの要件では、作った金型の不備を手直しした部分を測定し、それを CAD データに反映させる機能は必須である。また、スタイルデザインにおいて測定点群データから曲面を生成するリバースエンジニアリングはどこでも行われている。新しい素材で変形特性がよく分からない場合は、試作のプレス金型で試し打ちしたものを測定して、CAD データとずれている部分の CAD データを修正する。
→(小形)それは成型の際に金型が変形するのか、あるいは成型品が変形しているのか。
→(大高)両方ある。分かっている素材で作った金型の挙動はよく分かっているが、分かっていない素材の場合は上記のような処理が必要である。同様のことは鋳造型でもいえる。
(小形)測定データの標準形式はあるのか。
→(松永)ドイツが主体になって ISO で標準化している。
→(大高)実際にはデファクト形式が多く使われている。
→(小形)以前に 3 次元測定機の点群データを CAD に取り込むのに苦労したことがある。
→(大高、松永)今はリバースエンジニアリングのよいツールがある。

(小形)滑らかな形状では、測定点にある程度間隔があっても問題は出ないが、形状の変化が激しい箇所では、測定点が離れているとまったく違う形状になることがある。
(大高)測定点群データからフィレットを推定するのはベンダの工夫のポイントであるが、キャラクタラインの抽出は無理である。

- 測定データについては今回初めて提示したので、各産業界の知見を元にして、今後改訂するためのコメントをメールで出して欲しい。
- 8000-300 については本日説明を省略する。資料にある 5 項目の要件の中で 5 番目以外のものを 8000-311 に入れる予定であるが、来週の SC4 会議の結果に依存する。
- Sketch/Feature/Parametrics は、SASIG PDQ Guidelines では非形状とされているが、我々は形状であると思っている。それぞれの取り扱い方針がこの資料に書かれている。
- Sketch の品質不具合が後工程に波及することはないので、我々の規格で取り扱う必要はない。
- Feature の品質は魅力的なテーマであるが、あまりに重いので取り上げない。
- Parametrics は、リソースモデルが完成しているので、その普及促進のためにも取り上げたい。
- Appendix は 8000-311 のどこかに入れるものであるが、PDQR10-01-04 で説明済みである。

(事務局)Parametrics は自動車業界ではよく使われていると聞いているが、航空機業界ではどうか。
→(三富)自分は詳しくないので調べておく。

7. ビジネス条件に依存する項目の実現方法（平岡、PDQR09-05-08）

- リソースモデルではなくて、アプリケーションモジュールで実現する（アプリケーションモジュールについて簡単に説明）。

(大高)STEP 規格の中で、航空機業界が開発した AP203 はモジュール化されているが、自動車業界が開発した AP214 はモジュール化されていない。後者をモジュール化して、この両者を AP242 としてまとめる動きがある。
(大高)PDQ-S の 5 個のスキーマの図を加えて説明した方がよい。
(小林)ID を指すだけでは、内容までは保証できない。
(小形)チェックの結果は quality stamp の方に反映されるのか。
→(大高)JAMA/JAPIA の quality stamp ではなくて、PDQ-S と同じ形式で出力される。それをどのように quality stamp にまとめるかは別の残された問題である。
→(小形)チェッカに対するプロファイルの形式を、得意先との品質チェック仕様の合意書として使えるようなフォームにして標準化できないか。またそのプロファイルの流通を、SASIG の ENGDAT と連携して運用できないか。
→(大高)あらためて要件を出してくれれば検討する。
(田中敬昌)quality stamp もこの仕組みで実現できないか。
→(大高)できるかもしれない。PDQ-S の inspection result には quality stamp を構成するためのデータは含まれているので、あとはそれをまとめるための管理情報があればよい。
→(田中文基)Part 59 では管理情報の仕組みを入れなかったが、PDQ-S モジュールには入っている。
→(田中敬昌)それなら、SASIG 関係者には quality stamp もできるといった方がよい。

8. 今後の進め方（事務局）

- **3/9 の委員会の議事録にあるように、PDQ ガイドライン適用の最新状況の紹介資料を多賀さんから提供していただく。**
- **3/12 に Mr. Zurey から入手した回答資料をメールで配布したままになっているが、次回の委員会で検討するので、内容を見ておいて欲しい。**

(大高)Boeing が提供してくれると言ってまだ入手していない資料を念押しする。

9. 次回の予定

- 日時：7 月 28 日(水)　14 時－17 時（田中敬昌委員は SASIG 会議出席のため欠席）
- 場所：機械振興会館 4 階　JIPDEC 第 3 会議室
- 議題：SC4/Bethlehem 会議の結果を反映させた規格開発内容
  長期データ保存の検討

以上

LOng Term Archival and Retrieval of Digital Data (LOTAR)

LOTAR

Aerospace Industries Association - Aerospace and Defense Industries Association of Europe – Standardization (AIA-ASD Stan)

LOTAR an Executive Summary

PDQR10-02-02

"Long Term Archival and Retrieval of Digital Product, Technical, and PDM Data (LOTAR) in a Global Industry"

Rick Zuray
LOTAR Int'l co-chair

LOTAR INTERNATIONAL PROPRIETARY

LOTAR Objectives

LOTAR

Aerospace Industries Association - Aerospace and Defense Industries Association of Europe – Standardization (AIA-ASD Stan)

The four (4) Major areas addressed by LOTAR..

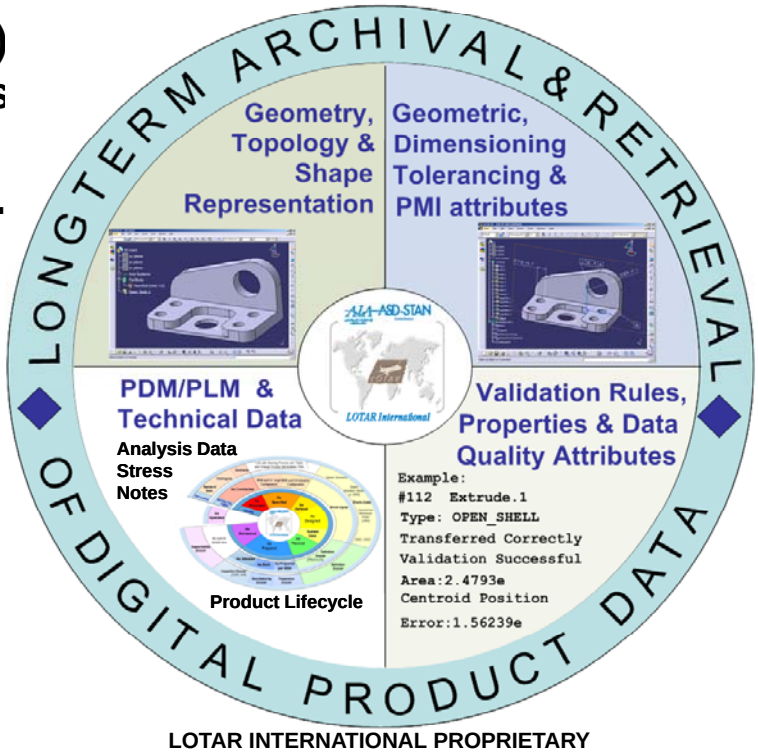

LOTAR INTERNATIONAL PROPRIETARY

Project History

LOTAR

Aerospace Industries Association - Aerospace and Defense Industries Association of Europe – Standardization (AIA-ASD Stan)

With the onset of Model Based Definition (MBD) development in January 1997, a Boeing team was chartered to evaluate and develop a process to address the storage, retention and retrieval of 3D Product Definition produced by MBD methodologies.

September 1998 an internal process was developed and accepted by the Certificate Management and the Aircraft Certification Offices of the FAA. The FAA requested that the team meet with the Aerospace Industries Association (AIA) and charter a project to write a standard that to address the storage, retention and retrieval of 3D Product Definition Data that would be applicable to all civil aviation across America. The AIA Project was chartered under the Civil Aviation Council (CAC) under the Manufacturing Maintenance & Repair Committee (MMRC) in May 2000. The AIA team was formed and held it's first meeting in August 2000. The AIA Standard was completed and released as ARP-9034 in Sept 2002.

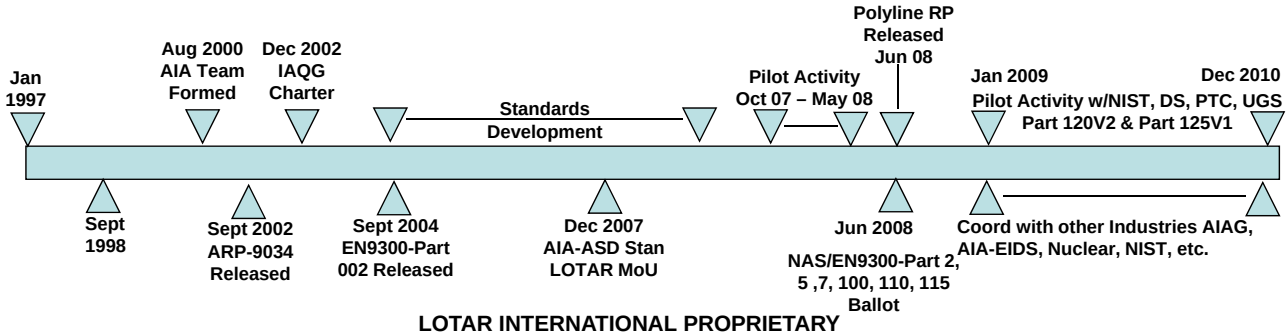

LOTAR INTERNATIONAL PROPRIETARY

Project History

LOTAR

Aerospace Industries Association - Aerospace and Defense Industries Association of Europe – Standardization (AIA-ASD Stan)

In October 2002 at the International Aerospace Quality Group (IAQG) meeting in Cincinnati OH, Rick Zuray was asked to work with Jean-Yves Delaunay and the European LOTAR effort and together develop a single set of harmonized standards that addressed the storage, retention and retrieval of 3D Product Definition Data across the entire Aerospace Industry. The Team was chartered in Dec 2002 and was Co-chaired by Rick Zuray , from Boeing and Jean-Yves Delaunay, from Airbus. The International team meets 5 times a year and has developed several parts to the base Standard which will be released under the name EN9300-Part-xx for Europe and NAS 9300-Part-xx for Americas. Since that pivotal moment, the LOTAR activity has grown across the aerospace industry and continues to grow exponentially. The team is now supported across 6 countries and by over 100 companies. With the formation of the AIA, PDES Inc, ASD-STAN & ProSTEP consortium in August 2009, the ground work has been set up for more aerospace companies to participate financially under three levels of membership.

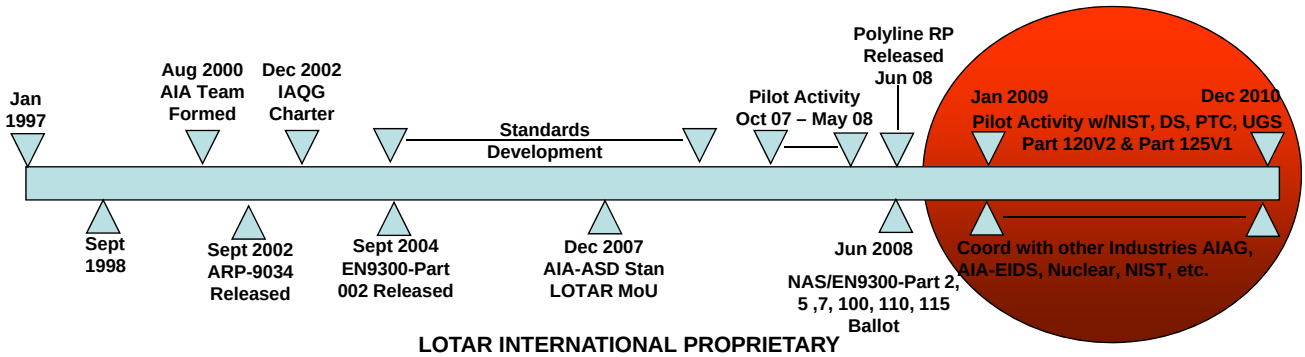

LOTAR INTERNATIONAL PROPRIETARY

Key Objectives

- FAA requires current configuration for each airplane in service.
  - Type Certificate which includes all Type Design
    - Preservation of complete Product Definition including the original Design Intent.
    - Type Design Data must be maintained for the life of the product fleet which could exceed 70 years

LOTAR
Aerospace Industries Association - Aerospace and Defense Industries Association of Europe – Standardization (AIA-ASD Stan)

Key Objectives

Since each type certificate is considered to include the type design (reference: FAR § 21.41), the type design data must be maintained and be retrievable for the duration of the type certificate (operational life of the product/fleet).

It is important to ensure that the necessary and correct data will be available when needed throughout the projected life span of the product. Therefore, the applicant should develop and submit a procedure for FAA approval describing electronic submittal and storage of type design data.

Evolution of Product Definition Da

LOTAR

Aerospace Industries Association - Aerospace and Defense Industries Association of Europe – Standardization (AIA-ASD Stan)

Product Definition Data (PDD) creation, storage and distribution has significantly changed in the past 50 years. PDD is the source for "Type Design" as defined by the FAA.

The first generation methods for PDD creation were 2D manual board drawings with design engineers and manufacturing engineers. This evolved into a 2D CAD design method which allowed the digital creation of 2D drawing (without a 3D model) The 2D Drawing is the authority.

Generation 1
(2D only: 2D Authority)

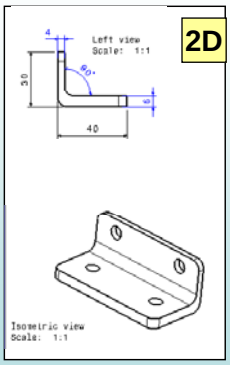

Generation 2
(2D and 3D: 2D Authority)

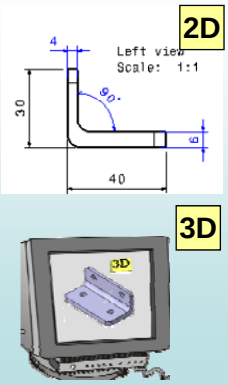

Generation 3
(3D Only: 3D Authority)

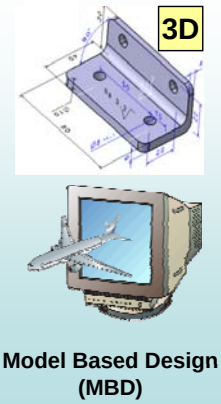

Model Based Design (MBD)

The second generation method of PDD creation used only CAD design method which was based on use of 3D models and output was both 2D models (drawings) and 3D CAD datasets to drive CAM/CAI. The 2D Drawing was the authority for most factory usage with the exception of CAM/CAI.

The third generation method is based on the use of parametric and relational design in 3D Model Base Data. The PDD information is defined only in 3D models that contain associative GD&T and annotation to effectively replace the need for a 2D drawing representation. The 3D Model is the authority but low end visualization is require to support various end usages – thus U3D.

LOTAR INTERNATIONAL PROPRIETARY

LOTAR Objectives

LOTAR

Aerospace Industries Association - Aerospace and Defense Industries Association of Europe – Standardization (AIA-ASD Stan)

- For Digital Data, the challenge is that the data is often stored in a proprietary, native format and will most likely be un-interpretable over time. The use of a neutral archiving format safeguards the interpretability of the data for a much longer period of time, perhaps it's entire retention period.
- Archiving data in it's native form requires periodic migration to the new release (version) and this method quite often leads to data loss and the repair can be costly. A typical technological obsolescence cycle of a CAD generation roll (i.e. CATIA V4 – V5) is 3 – 5 years.
- Neutral forms make it easier to migrate the data based on the way that the Application Protocols (AP)s are structured. In addition, their life expectancy (obsolescence cycle) is significantly longer in duration.

LOTAR INTERNATIONAL PROPRIETARY

LOTAR Objectives

- Digital archives mandate that we capture and preserve information in such a way that the information can be accessed and presented at any time in the future.

- An obvious challenge for archives of digital information is the limited storage lifetimes due to physical media decay.

LOTAR INTERNATIONAL PROPRIETARY

Lifecycle Information Planning

- Each responsible company needs to ask the following questions in order to optimize and standardize their data retention process:

1. Why are we archiving the data?
   - Business Requirement
   - Regulatory Requirement
   - Organizational Requirement

LOTAR INTERNATIONAL PROPRIETARY

Lifecycle Information Planning

LOTAR

Aerospace Industries Association - Aerospace and Defense Industries Association of Europe – Standardization (AIA-ASD Stan)

2. What information should we archive?
3. What is the configuration of the information?
4. What is the information context?
5. What is the format of the information and what final form does it need to be archived in?
6. How long do we need to keep the data?
7. How frequently do we need to access the data?

"Life Cycle Information Planning asks the question, how do we retain our product knowledge throughout the life of the product?"

LOTAR INTERNATIONAL PROPRIETARY

Lifecycle Information Planning

LOTAR

Aerospace Industries Association - Aerospace and Defense Industries Association of Europe – Standardization (AIA-ASD Stan)

The Lifecycle of software & hardware is relatively short compared to the lifecycle of an aircraft. Currently, for CAD S/W versions roll between 6 & 12 months with generations ranging from 3-7 years. This is compared to an aircraft lifecycle of 70+ years

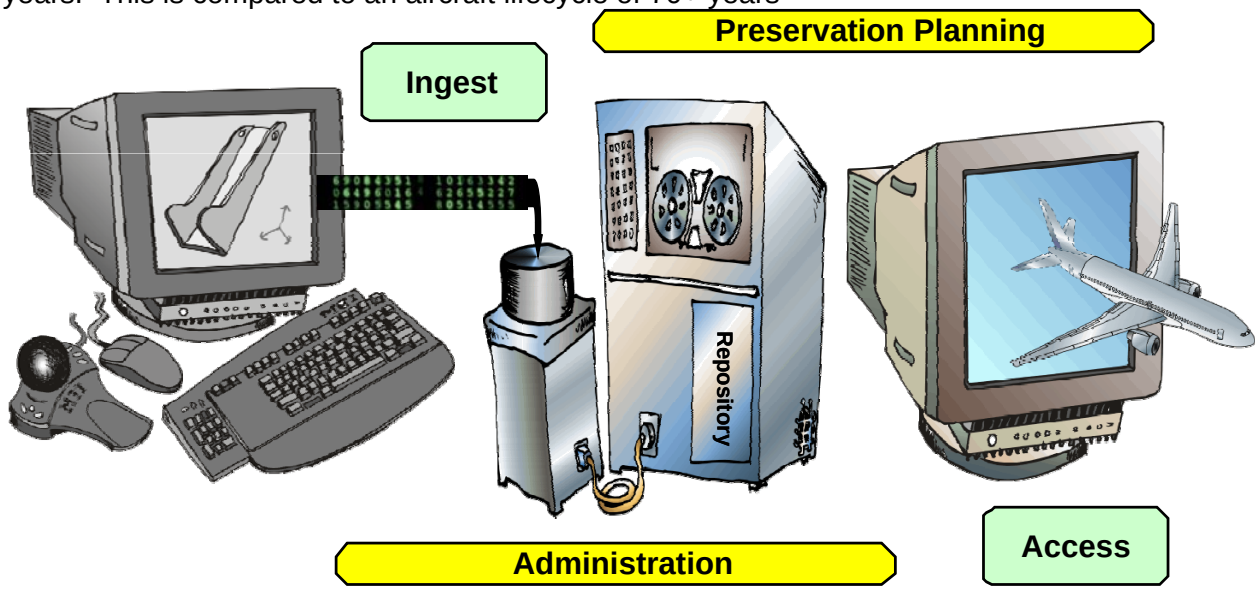

LOTAR INTERNATIONAL PROPRIETARY

Data Retention and Archive Model

- The following three categories distinguish retention periods of data:

  Short Term: This time frame is within one or two version rolls (i.e. Catia V5 R12 – R13; UGS NX3-NX4)

  Medium Term: This time frame is within one generation roll (i.e. Catia V4 – V5; UG 18 – NX1)

  Long Term: This time frame is over multiple generations (i.e. Catia V3 – V7; UG 16 – NX7)

Data Retention and Archive model as defined by the project co-led by Boeing and Airbus

The Open Archive Information System (OAIS) model defines the processes and actors which ingest the data into an archive, and which provide services to consumers of the data, including both query and retrieval. The most subtle area, and possibly the least understood, is the construction of the web of information needed to correctly read the data once it has been retrieved.

The LOTAR standard uses the OAIS reference model as a basic framework, providing specific guidance on specialized types of data; initially Mechanical CAD/CAM/CAI and non-geometric meta data. The problem here is not to be sure that the data comes in and out correctly, but that it is being correctly interpreted by the new generation of software. That is, if information is data in context, and the context is the application which interprets the data, then LOTAR looks at information retention. In short, how do we know that the design we look at in twenty years time is the same as the design we look at in our current system?

LOTAR makes the assumption that we know what we need to archive. Lifecycle Information Planning asks the question, "how do we retain our product knowledge (i.e. Design Intent) throughout the life of the product?" This is wider than the OAIS question, "what do we need to be able to understand this particular package of data?", rather asks "what data about a product should we keep?" Although the answer starts with obvious elements such as the design and the configuration, it soon gets into areas such as the preservation of design rationale, the processes by which the product was designed, and the organizational structures that enable those processes to operate.

Open Archive Information System ISO 14721

LOTAR

Aerospace Industries Association - Aerospace and Defense Industries Association of Europe – Standardization (AIA-ASD Stan)

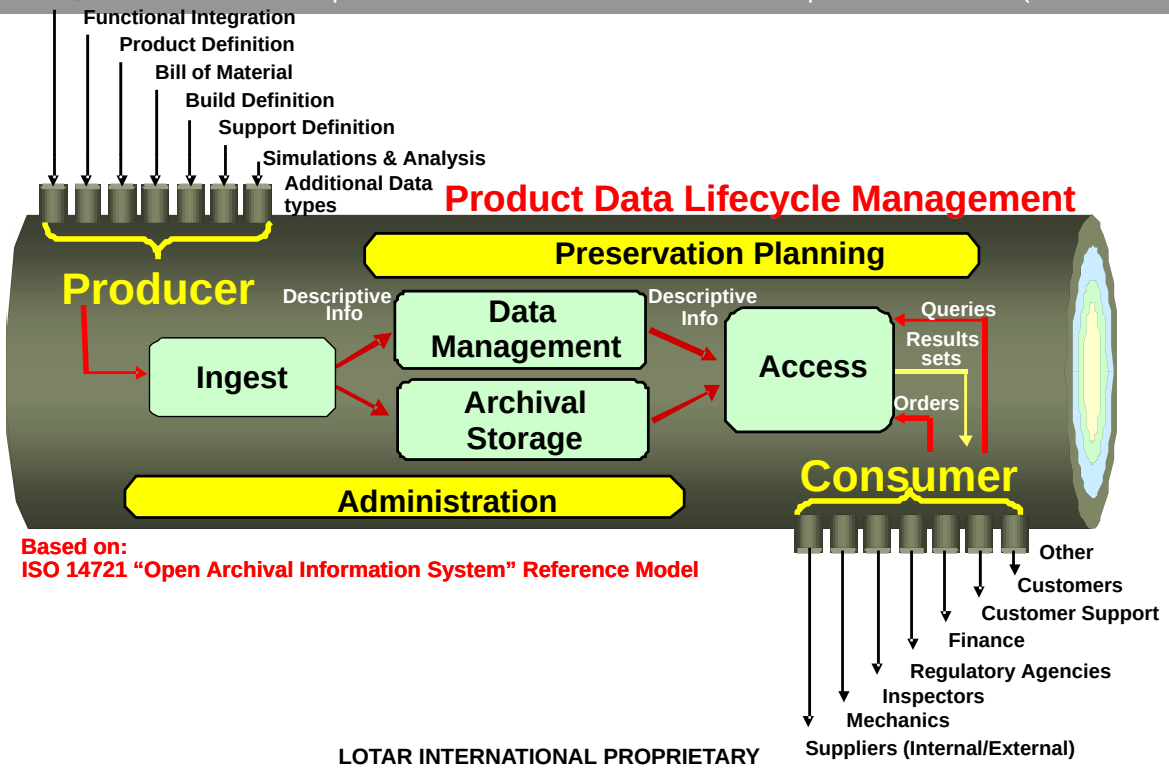

Based on:
ISO 14721 "Open Archival Information System" Reference Model

LOTAR INTERNATIONAL PROPRIETARY

Data Retention and Archive Model

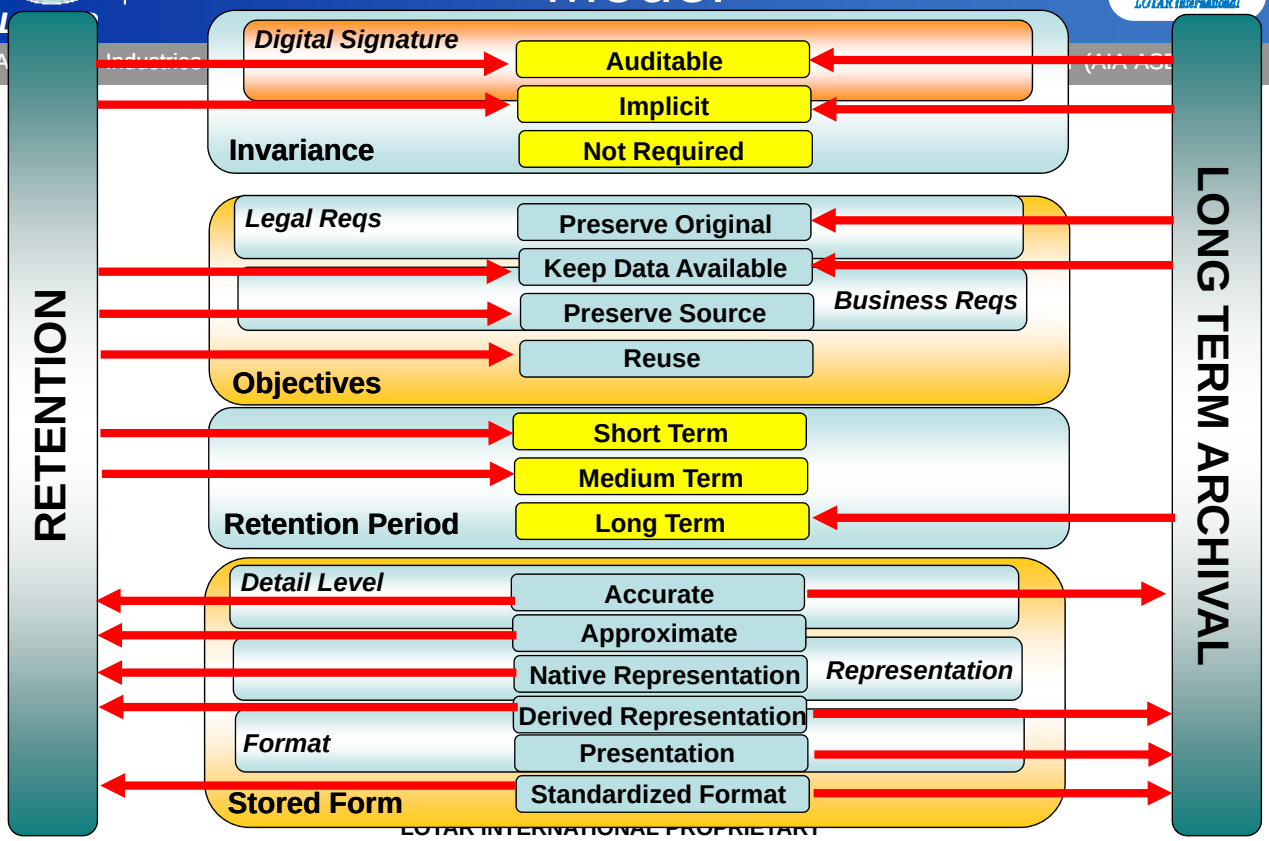

Data Retention and Archive Model

LOTAR

Aerospace Industries Association - Aerospace and Defense Industries Association of Europe – Standardization (AIA-ASD Stan)

The retention – archival model requirements shown previously lead to four main areas of consideration:

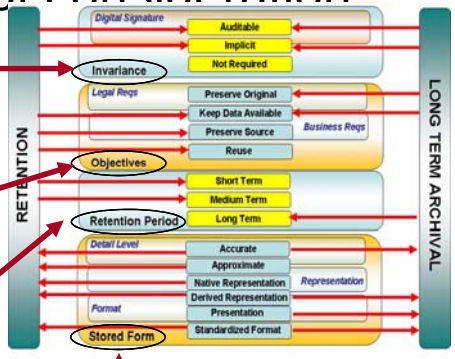

Invariance: How important is it to ensure that digital data is not altered.

Objectives: Why retaining the digital data is required.

Retention Period: The required period of time the data is to be stored.

Stored Form: The stored format of the digital data.

LOTAR INTERNATIONAL PROPRIETARY

Data Retention and Archive Model

LOTAR

Aerospace Industries Association - Aerospace and Defense Industries Association of Europe – Standardization (AIA-ASD Stan)

To ensure that the information has not changed and provide evidential weight that the design intent has not changed, the following categories distinguish Invariance:

Auditable: Where validation methods and test suites ensure that information cannot be changed without the change being detected.

Implicit: Where the system is designed to prevent changes. The system must supervise activities which would result in changes of the digital data. The supervision, for example, could be realized within a separate write protected vault.

LOTAR INTERNATIONAL PROPRIETARY

Data Retention and Archive Model

LOTAR

Aerospace Industries Association - Aerospace and Defense Industries Association of Europe – Standardization (AIA-ASD Stan)

For digital data, the challenge is that the data are often stored in a proprietary, native format and will most likely become un-interpretable over time. The objectives for keeping data are distinguished into two major categories:

Legal/Certification Requirements: This includes proof of technical documentation that support Government & Regulatory laws.

Business Requirements: This includes keeping knowledge of business processes and documentation.

Four subcategories describe these objectives in more detail:

LOTAR

Aerospace Industries Association - Aerospace and Defense Industries Association of Europe – Standardization (AIA-ASD Stan)

1) To preserve the original data (generated by a source system) so that it can be used as evidence of what the configuration of the data was at a particular point in time (i.e. date). This characteristic fits within the subcategory **"Legal/Cert Requirement"**.

2) To keep the data available to new users over the period in which it is kept. This characteristic fits with the subcategories **"Legal/Cert & Business Requirement"**

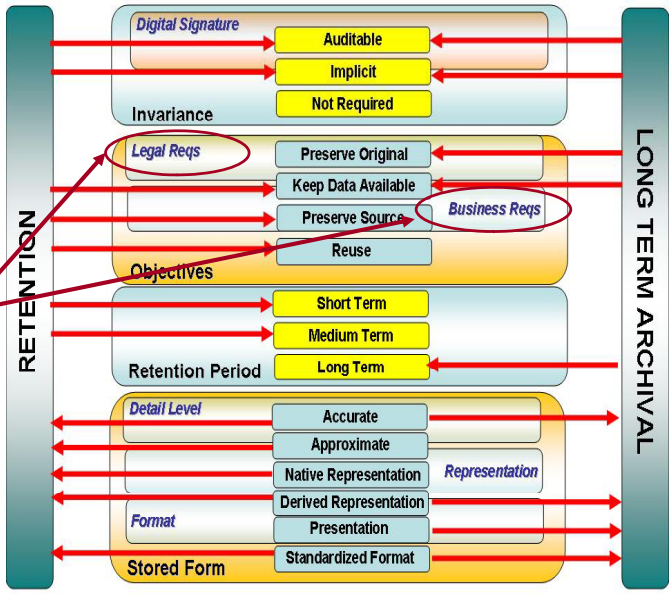

Four subcategories describe these objectives in more detail:

3) To be able to preserve the source of the stored data. This characteristic fits with the subcategory **"Business Requirement"**

4) To be able to reuse the data (i.e. modify the design to meet new requirements). This characteristic fits with the subcategory **"Business Requirement".**

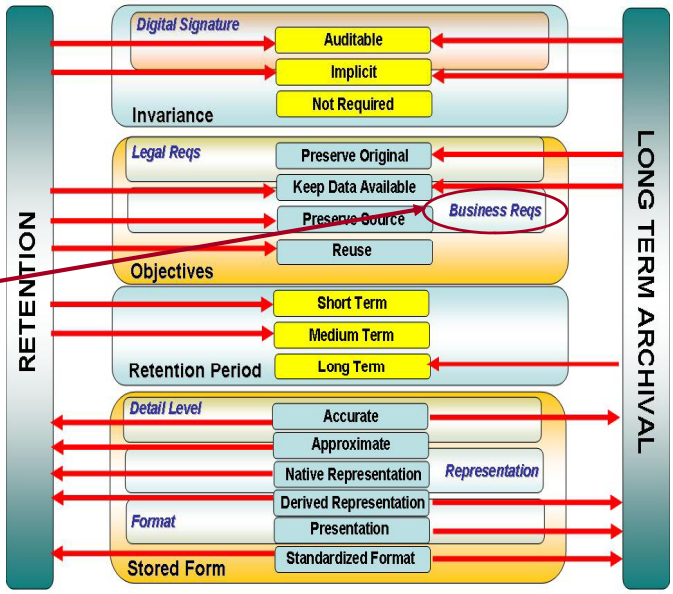

Representation and Presentation of 3D Geometric shape, tolerance and annotation properties/attributes

There is a key distinction between a representation and a presentation of data.

In a representation, the computer holds the information/data about the concept.

In a presentation the computer transforms the data representation into a human understandable form.

Levels of GD&T/PMI information

The preservation and exchange of GD&T/PMI information is currently the main focus of LOTAR, However, there are different levels of information that can be exchanged in that context, which are listed below The LOTAR work group started with the Polyline Presentation approach described in the "Recommended Practices for Geometric Dimensions & Tolerances (GD&T)/Product and Manufacturing Information (PMI) Polyline Presentation" document which was released last June 2008 based on the users' immediate need to capture this information in a STEP file.
As the long-term goal, the LOTAR working group intends to implement the "Representation plus Full Semantic Presentation" approach, which will render the most benefit for both documentation and reusability of data.

Representation

Describes the exchange of reusable, associative GD&T/PMI information in a STEP file. This information is by itself not visible in the 3D model, but a CAD system importing this file can use the Representation data to re-create the visible GD&T/PMI information. The representation approach also aims to pass GD&T/PMI data on to downstream applications, such as CAM.

Levels of Information

Presentation

Describes the exchange of GD&T/PMI information in a way that is visible for the user in the 3D model. There are three levels of presentation:

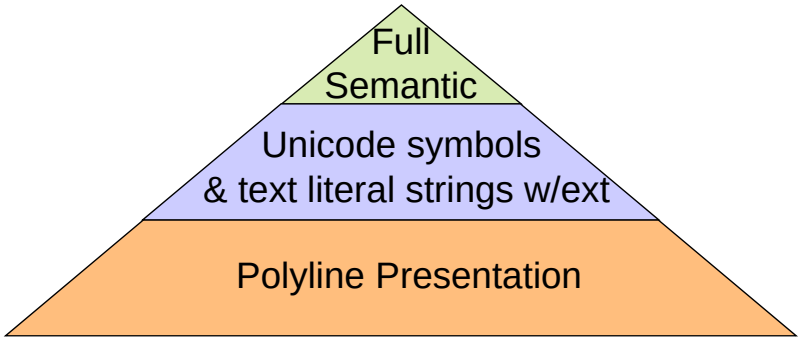

LOTAR INTERNATIONAL PROPRIETARY

Levels of Presentation

Polyline Presentation

This captures the information displayed for GD&T/PMI “as is”, by breaking down the annotations and symbols into individual lines and arcs. This approach is the only one independent from the Representation, and is not machine-interpretable.

LOTAR INTERNATIONAL PROPRIETARY

Full Semantic Presentation

Adds all the positioning, styling and other information to the Representation, so that an importing system supporting this capability can fully re-create the GD&T/PMI information in the 3D model, by combining the information content from the Representation with the display settings given by the Presentation. Unicode.

LOTAR

Levels of Presentation

Aerospace Industries Association - Aerospace and Defense Industries Association of Europe – Standardization (AIA-ASD Stan)

Unicode Presentation

STEP resource parts provide a number of pre defined symbols that can be used within the context of PMI (ref Unicode-STEP mapping Chart). There are a number of forms of such symbols; the two of most significance are terminator symbols (arrows etc.), dimension symbols and geometric tolerance symbols. For the former, each symbol can be considered as a distinct object which can be handled using the pre defined symbol form. However, while dimension and geometric tolerance symbols could be handled that way – that is not really the optimum way of supporting interoperability between CAD systems and STEP……

Unicode Presentation cont.

The reason for that is that within the CAD systems, the PMI data is typically handled as sets of character strings where the specific tolerance symbols are represented, in a proprietary way, within the string. It is possible to break the strings up and extract the symbols but in doing this the relationship of the tolerance symbols with the rest of the text is completely lost. In particular, the position of a symbol at a specific point within the string is lost. For example ⌴ ∅ 7.8 – 8.2 ↧ 2.4 – 2.8

This could be handled as a single string within a CAD system but would result in one or two text literals in STEP together with three symbols which are related only by virtue of belonging to the same PMI; any sense of order would be lost.

A better way of supporting this data which would maintain the wholeness of the data would be to map the whole string as a text literal and to use the Unicode characters to denote the symbols. This maintains the semantic information that the diameter range is 7.8 to 8.2 and the depth range is 2.4 to 2.8.

- A native representation is that created by and is proprietary to the source system format.
- A derived representation is a transformation of the native data, which may be based on a native or standardized format (e.g., a .pdf may be derived from a text document as an alternative representation but the information context remains unaltered).
- A presentation is a visualization of data to a user, (e.g., a 2D drawing, a capture or printed sketch of the product data representation).

Format: This describes the different physical formats of the data.

LOTAR

Aerospace Industries Association - Aerospace and Defense Industries Association of Europe – Standardization (AIA-ASD Stan)

- A native format is a specific format of data in a syntax which is proprietary and dependent on a specific system or interface. A native format depends directly on the lifecycle (versions, generations) of the related system or interface.

- A standardized open format is a format of data in a syntax, which is defined by a broad community, such as ISO, and which is independent of specific system or interface. "Open" means completely and precisely documented in syntax and semantics and is applicable for free. In addition, standardization processes regulates the change processes for the standard.

LOTAR INTERNATIONAL PROPRIETARY

Model Based Enterprise Strategy

LOTAR

Aerospace Industries Association - Aerospace and Defense Industries Association of Europe – Standardization (AIA-ASD Stan)

MBplcs
•Vendor support
•Investigating

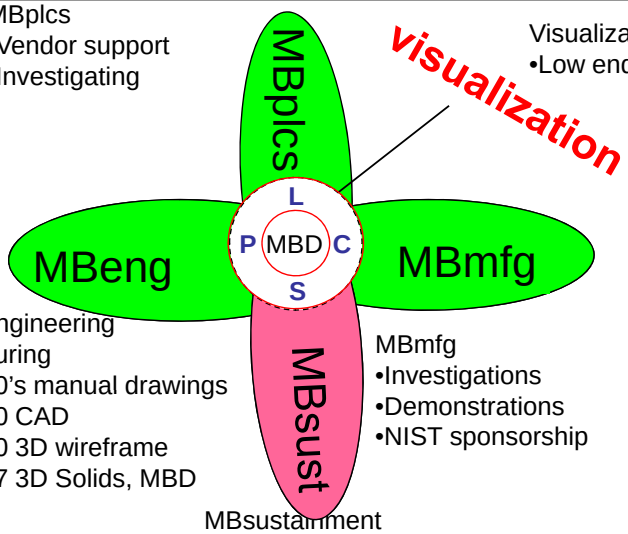

Visualization
•Low end viewing data and documents

MBD/MBE
- **Company Strategy**
- **Key to harmonization all model based efforts**

MBengineering
•Maturing
•1950's manual drawings
•1980 CAD
•1990 3D wireframe
•2007 3D Solids, MBD

MBmfg
•Investigations
•Demonstrations
•NIST sponsorship

MBsustainment
•LOTAR
•Testing
•AP 203 E2, AP239, AP238
•Retain investment of data and information for data exchange, reuse and repurpose
•Regulatory requirements

Key Message

LOTAR Enables
- ***Retaining Company Investments***
- ***Exchange, Reuse and Repurpose***
- ***Regulatory Requirements***
- ***Interoperabity with Supply base***

LOTAR INTERNATIONAL PROPRIETARY

Example LOTAR Process Flow

LOTAR

Aerospace Industries Association - Aerospace and Defense Industries Association of Europe – Standardization (AIA-ASD Stan)

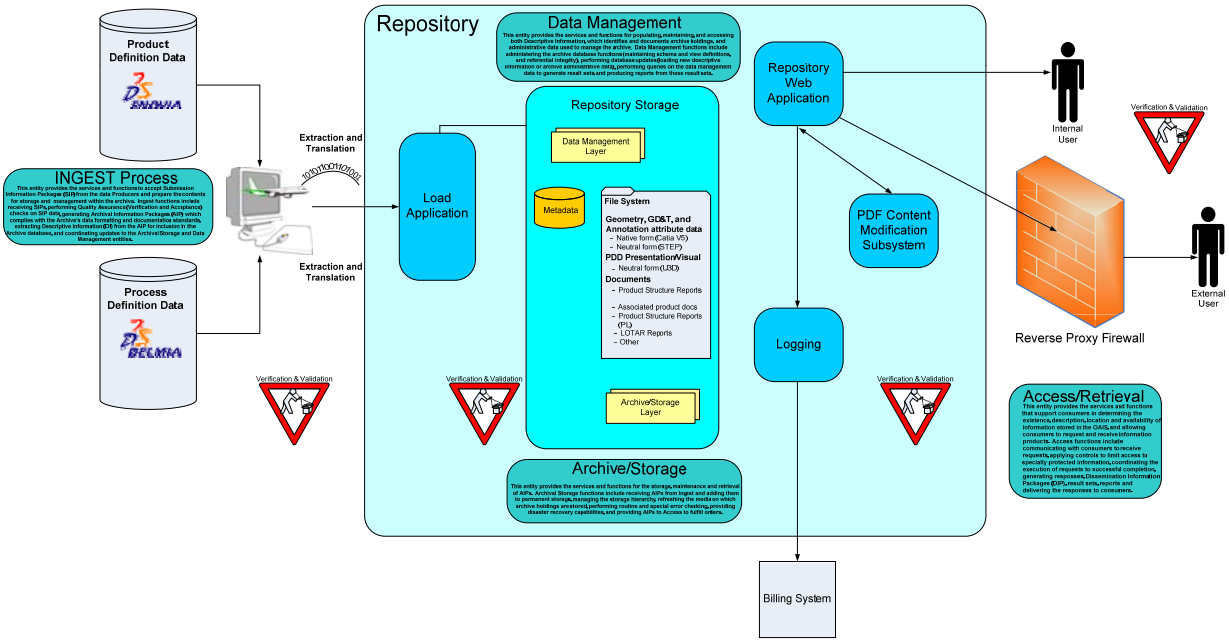

LOTAR INTERNATIONAL PROPRIETARY

The LOTAR International working group is operated under the AIA, PDES Inc., ASD-STAN and the ProSTEP iViP consortium.

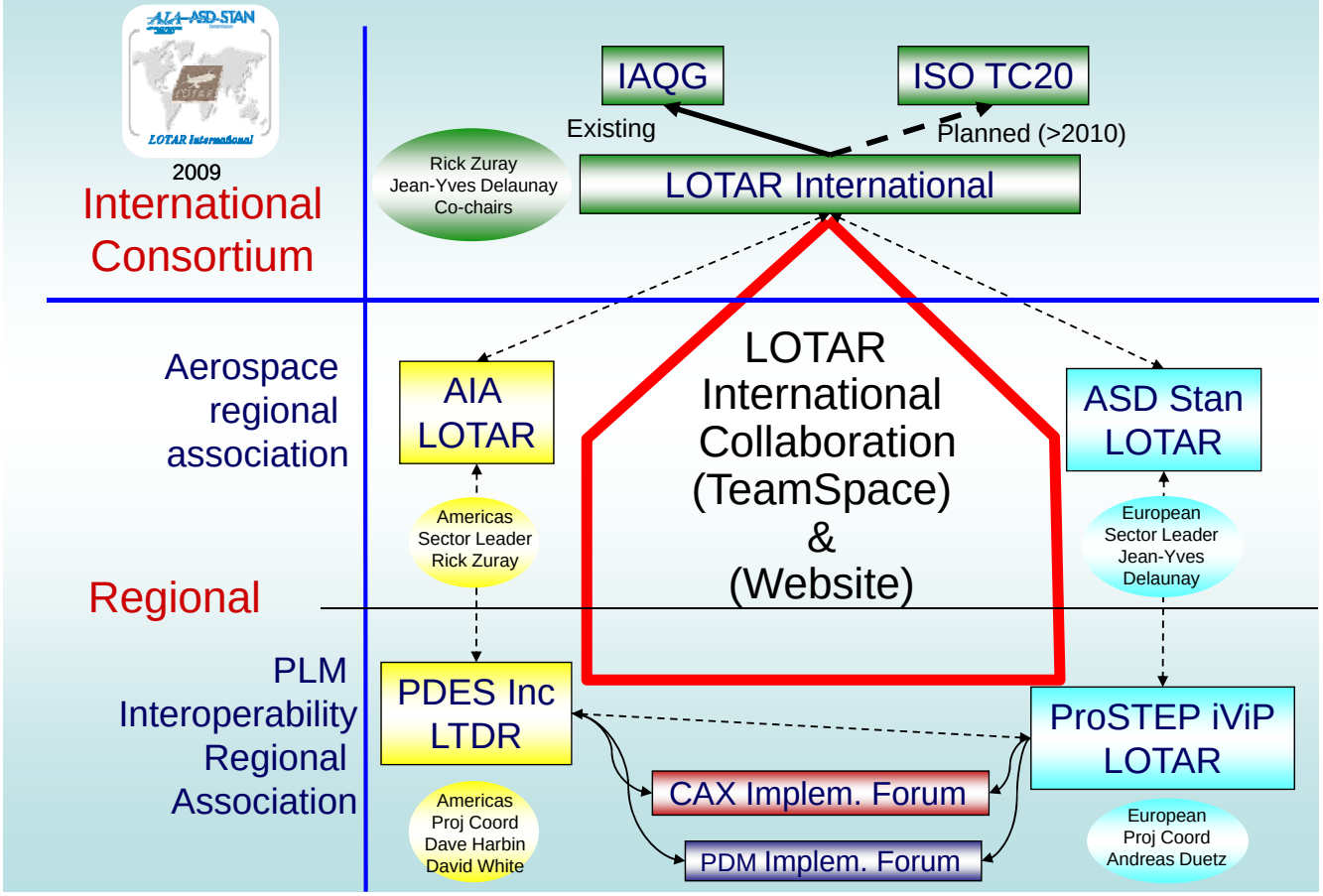

LOTAR International Work Breakdown Structure (WBS)

LOTAR

Aerospace Industries Association - Aerospace and Defense Industries Association of Europe – Standardization (AIA-ASD Stan)

WP0: Project Management

WP1: Development of **Basic Parts**

WP2: Development of **Common Process Parts**

WP3: Development of **Data Domain Specific Parts**

WP4: Implementation of **Pilot Projects**

WP5: Development of **L-T Archiving Rec. Practices**

WP6: Harmonization (**AIA, ASD, PDES Inc, ProSTEP iViP, ISO, CAX Impl. Forum, …**)

WP7: Communication (FAA, EASA, … IT Vendors, Standardization)

LOTAR INTERNATIONAL PROPRIETARY

NAS9300 - EN9300 standards 1 – 20 & 100 series Thrusts

LOTAR

Aerospace Industries Association - Aerospace and Defense Industries Association of Europe – Standardization (AIA-ASD Stan)

Basic Parts

- **Part 1:** Common Overview
- **Part 2:** Requirements (V1) – V2 in ballot
- **Part 3:** Fundamentals and concepts
- **Part 4:** Methods
- **Part 5:** Authentication and Verification
- **Part 6:** Functional Architecture
- **Part 7:** Terms and references
- Part 8: Security ?
- Part 9: Certification ?

Q1 2010

Common Process Parts

- **Part 10:** Common Process
- **Part 11:** Data Preparation
- **Part 12:** Ingest
- **Part 13:** Archival Storage
- **Part 14:** Retrieval
- **Part 15:** Removal

TBD Parts

- **Part 16:** Test Suites
- **Part 17:** Audits
- **Part 18:** Validation
- **Part 19:** TDB
- **Part 20:** Preservation Pln

3D CAD Detail Geometry with PMI & Assembly Parts with PMI

- **Part 100:** Fundamentals & & concepts
- **Part 110:** CAD 3D explicit geometry
- **Part 115:** CAD 3D (explicit) assembly structure

Explicit 3D Geometric Shape Representation

- **Part 120: V1-V3** CAD 3D explicit geometry (Detail) with PMI & F-F
- **Part 125:** CAD 3D explicit geometry (Assy) with PMI & F-F

Explicit 3D Geometric Shape Representation including Product & Manufacturing Information (PMI) and Form Features

- **Part 130:** CAD 3D Param geometry (Detail) with PMI & F-F
- **Part 135:** CAD 3D Param (Assy) with PMI & F-F

Explicit 3D Geometric Shape Representation including Product & Manufacturing Information (PMI), Form Features & Parametric Attributes

- REL : Release prEN9300
- FINAL REV. : Comments received answers/update in progress
- BALLOT : Sent for ballot by ASD & AIA
- DRAFT : In preparation
- Q3/09 : planned data

NAS9300 - EN9300 standard overview 200 & 300 series Thrusts + RP/Specs

LOTAR

Aerospace Industries Association - Aerospace and Defense Industries Association of Europe – Standardization (AIA-ASD Stan)

Product Management Data

2009/2010

- Part 200: Fundamentals & & concepts
- Part 210 PDM "As-Design"
- Part 220 PDM "As-Planned "

3D Composite Design

2010

- Part 300: Fundamentals & & concepts
- Part 310 TBD
- Part 320 TBD

STEP AP Work

Q3 2009 IS

- AP203E2: Addition of PMI

LTA Start Q2 2009

- AP239 PLCS

WS Sept 23 2009

- AP203 – AP214 Harmonization Effort

LTA Start Q1 2010

- AP209: 3D Composite Design

Recommended Practices & Specifications

ECD 12-31-09

- PMI RP

ECD 07-31-09

- Unicode String Specification - RP

ECD 07-31-09

- User Defined Attribute RP

LOTAR INTERNATIONAL PROPRIETARY

WP1, WP2 Development of LOTAR standards by versions

LOTAR

Aerospace Industries Association - Aerospace and Defense Industries Association of Europe – Standardization (AIA-ASD Stan)

version 1 (2003-2009)

- **Basic parts (requirements…)**
- **Process parts (…)**
- **Parts for LTA of:**
  - **CAD 3D & assemblies**
  - **CAD 3D with GD&T / PMI (technology 1 "Polylines")**
- **A single standard for US & Europe aerospace industries (AIA – ASD Stan)**

A complete set of parts for implementation

version 2 (2009-2011)

- **Basic parts**
  - **Preservation Planning (2009-2010)**
  - **Audit & Certification (2010)**
- **Parts for LTA of:**
  - **CAD 3D with GD&T / PMI (technology 2 "full representation")**
  - **Product Management Data**
  - CAD 3D Composite Design
  - Priority 2: Parts for LTA of:
    - CAD 3D Electrical Harness
- Consolidation of the international organization & harmonisation efforts

Ax Implementor Forum for LTA

L PROPRIETARY

WP3: Development of
Data Domain Specific Parts

- P120 V1: LT Archiving of CAD3D with PMI "Polylines presentation"

  P120 V2: LT Archiving of CAD3D with PMI
- P125 V1: LT Archiving of CAD 3D assembly structure with PMI
- P200: Fundamental and concepts for LT Archiving of Product Management
- P210
- P220:
- P300: Fundamental and concepts for LT Archiving of 3D Composite Design & Manufacturing information
- P310: LT Archiving of 3D explicit Composite Design information
- P400: Fundamental and concepts for LT Archiving of 3D electrical harness Design & Manufacturing information

LOTAR INTERNATIONAL PROPRIETARY

WP4:
Implementation of Pilot Projects

- Part 120 V1 2009
  - –Unicode validation properties with OCR
  - –User Defined attributes

Pilot activity with DS, PTC and Siemens (partially through Theorem Solutions) to evaluate semantic GDT/PMI solution Rep/Pres in addition to testing out using equivalent Unicode strings values as validation properties for polyline annotations and evaluating a number of semantic User Defined Attributes stored as STEP entities.

(Pilots run from Sept. 28th – Dec. 4th 2009.).

LOTAR INTERNATIONAL PROPRIETARY

WP5: Development of **L-T Archiving Rec. Practices**

- How to implement LOTAR via OAIS model within various Aerospace organizations.
- Applications to Automotive, Shipbuilding and Nuclear energy Industries have shown a large interest.

LOTAR INTERNATIONAL PROPRIETARY

Status: 2009 – 2010 actions

- Consolidate project coordination at the International level
  - Joint project plan for 2010
  - Complete 2009 project funding set up at the regional levels
    - Europe and USA
  - Finalize communication actions (Web site, LOTAR on a page, …)
- Secure the 2009 pilots activities for LT Archiving of CAD 3D with PMI information, requesting funding
- Finalize the publication of the balloted and reviewed LOTAR parts (2 V2, 5, 7, 100, 110, 115)
- Support to the preparation of the convergent STEP standard for LT Archiving / interoperability of PDM and CAD 3D with PMI information
  - Opportunity for the creation of new STEP entities for 3D with PMI

LOTAR INTERNATIONAL PROPRIETARY

2010 LOTAR International workshops and teleconferences

LOTAR

Aerospace Industries Association - Aerospace and Defense Industries Association of Europe – Standardization (AIA-ASD Stan)

- **4 workshops:**
  - March 15-19, 2010 – Gaithersburg, MD. in conjunction with PDES Inc. offsite and the CAx-IF – Hosted by NIST
  - June 15-17, 2010 – Toulouse, France – Hosted by Airbus
  - September 13-16, 2010 – Charleston, SC in conjunction with PDES Inc. offsite – Hosted by PDES Inc.
  - December 7-9, 2010 – Ottobrunn (outside Munich), Germany - Hosted by EADS Eurocopter
- **Several weekly teleconferences**
  - PDM team, every Monday
    - Organized by Cecil New and Heinrich Byzio
  - 3D with PMI team, every Tuesday & Thursday, with sub teams
    - Organized by Rick Zuray
  - Project Leadership Meeting, every Monday
    - Organized by Rick Zuray & Jean-Yves Delaunay

LOTAR INTERNATIONAL PROPRIETARY

Summary

LOTAR

Aerospace Industries Association - Aerospace and Defense Industries Association of Europe – Standardization (AIA-ASD Stan)

- To take full advantage of the benefits of MBD/MBE, it is imperative to retain the 3D product_definition in an application neutral format that is usable and not modified over time.
- STANDARDS enable the packaging of data and information for enterprise reuse and repurpose applications as well as enables data exchange between the Product Approval Holders and their Supply base with accurate and secure data.
- World-wide military projects are requiring contractors to be compliant to open standards for all facets of engineering, manufacturing and life cycle support

LOTAR INTERNATIONAL PROPRIETARY

Summary

A key component to bridge the design, build, and maintenance of our products, within Aerospace companies and their partners and suppliers, is Representation and Full Semantic GD&T both at the detail and assembly levels, however, this is a long term target for the LOTAR team and it's development will be phased based on technological maturity and industry need.

Conclusion

- Model Based Definition enables all the model based effort to take advantage of maturing technologies and proceeding independently
  - Need to harmonize the effort to maximize reuse and repurpose
  - Need to retain and preserve the investment of data and information
- The LOTAR Project enables the packaging of data and information for enterprise reuse and repurpose applications as well as enables data exchange between the PAH and their Supply base with accurate and secure data.

Contacts

Aerospace Industries Association - Aerospace and Defense Industries Association of Europe – Standardization (AIA-ASD Stan)

Rick ZURAY
AIA – ASD Stan LOTAR project co-chair
Technical Principal
Preservation of Digital Prod, Tech & PDM
The Boeing Company
Office: (425) 717-2654
Mobile: (206) 778-6730
Mail to: richard.s.zuray@boeing.com

Jean-Yves DELAUNAY
AIA – ASD Stan LOTAR project co-chair
CAD-PDM Information Interoperability
EMSA – Process Architect
Airbus
Office: (33) (0) 5 -61 -18-31-31
Mobile: (33) (0) 6 -76 -36-50-59
Mail to: jean-yves.delaunay@airbus.com

LOTAR INTERNATIONAL PROPRIETARY

March, 2010

PDQ-R Committee and Mr. Zuray

Questions and Answers on LOTAR

This document summarizes some questions raised from the committee members of the Japanese PDQ-R committee. (X.Y) after each comment implies comment raiser's name.

1. General Questions

<Appropriate width and depth of standardization>

Q1: In general, if a standard covers very wide area and its content is very precise, it may decrease flexibility of design/manufacturing activities and may cause unreasonably time consuming and complicated data transformation. Therefore, moderate width and depth is desirable. What is the principle of the LOTAR project on this issue (K.M)?

A1: The LOTAR stance on this issue is that we want to ensure that the standards convey enough information for a company, organization or agency to properly manage the tasks they wish to perform. We hold to the notion that there needs to be a balance of information that is portrayed in the standards. Too much information tends to overwhelm and confuse the reader and too little information leaves the reader needing more information to perform the necessary tasks.

<Categorization of application of LOTAR standards>

Q2: Those discussed in LOTAR project will finally fall into some categories on its application such as mandatory standards, guidelines for which there is some freedom of application, recommendations with weak constraints, etc. What is the principle or basic idea of the LOTAR project on this issue?. This information will be effectively used for selecting CAD systems or data format (K.M).

A2: The LOTAR standards, for the most part, are guidelines for how a company, organization or agency would implement a process to manage a model based environment, configure and package a dataset to archive, distribute, exchange or retain, understand what the requirements are for managing this type of data etc. The LOTAR standards do not dictate the use of specific systems, applications or hardware we leave this up to the company, organization or agency. We do, however, specify that if you plan on managing this type of data, these standards are the guidelines you must follow in order to comply with regulatory requirements etc. and have a successful implementation. The answer as far as being required vs recommended varies depending on the topic.

<Classification of business requirements>

Q3: It is understood that the objective of LOTAR is largely classified to cope with

legal/certification requirements or business requirements. Business requirements will vary depending on intended purpose or expected scenario for reuse of data. Is business requirement further classified to cope with different scenarios such as applied design, quality guarantee of supplementary product creation after the termination of volume production, etc.? Is required functionality corresponding to each scenario such as viewing only, measurable, changeable, etc. already defined in LOTAR? Is prioritization of business requirements already discussed and agreed (M.O, K.M)?

A3a: The business requirement classification was put in place to capture items that were not mandated by a regulatory agency but would cover what that the company feels is vital to its daily operation i.e. Intellectual Properties (IP), design reuse and repurposing, and may include applied design, quality guarantee of supplementary product creation after the termination of volume production, etc.

A3b: We have started defining functionality in the areas of visualization, validation and change management and are continuing to develop this over the next year. We would solicit your involvement in this area.

A3c: We continue to discuss our business requirements and are open to new ideas and comments. We would also solicit your involvement in this area.

<Target data>

Q4: Is the target of long term retention limited to computer sensible electronic data, or other media such as paper or microfilm are also considered (M.O)?

A4: The focus of the LOTAR activity is primarily on digital, electronic data and is not currently considering traditional media such as paper of microfilm.

Q5: It is understood that LOTAR targets not only design information but also GD&T and PMI information needed in down stream applications. Does PMI include manufacturing related data such as die data, line data, equipment data, jig and fixture data, etc.(M.O)?

A5: The Product & Manufacturing Information (PMI) that LOTAR is addressing includes all manufacturing information that is typically represented in a product definition.

2. Specific Questions

<Data processing procedure>

Q6: We'd like to know more details of expected data save, validation and retrieval procedure, especially its difference depending on retention period (short term/ medium term/ long term) and also depending on different use scenarios (H.H).

A6: I have some presentation material as well as excerpts from one of our standards documents that I will send you.

Q7: Is concrete recommended procedure on what shall be done and how to do it for each different use scenario discussed and defined such as CATIA data shall be transformed to

STEP data just after the termination of volume production, etc.(M.O)?

A7: We have many use case scenarios that depict a majority of the kinds of things that we would expect to see in a typical daily operation. We do have a proposed strategy that depicts options for when you would transform from a native form to a neutral form such as STEP etc. When the STEP CAD model is retrieved, there is a conversion in the target 1 native CAD system, with the creation of new validation properties ("target 1") and comparison with the original native properties, stored in the STEP file. In some cases, the STEP CAD model is retrieved also to be converted in another target 2 native CAD system with the creation of new validation properties ("target 2"), and comparison with the original native properties. In both cases, the target 1 native CAD model and the target 2 native CAD model can be used by downstream process (manufacturing, control, visualization, …), since they have been derived and validated from the CAD STEP archived model, used as the reference of the design intent.

Remark 1: After the release process, companies may delay the creation of the appropriate archived STEP CAD model, according to agreements with the potential consumers of the archive; but in this case, the manufacturer shall manage and document the relevant risk analysis. Then, the NAS9300-100 standard recommends not postponing the creation of the CAD archived model more than 2 to 5 years after the release date.

Remark 2: The identification of the STEP CAD archived model as the reference for the definition does not prevent the continued use of the native original CAD models in downstream process like Manufacturing or Support.

<Expected formats for 4 major areas>

Q8: It is understood that four major areas are addressed by LOTAR which are;

(1) Geometry, Topology & Shape representation

(2) Geometric, Dimensioning Tolerancing & PMI attributes

(3) PDM/PLM & Technical data

(4) Validation Rules, Properties & Data Quality Attributes

What format is expected to be used for each area (A.O, M.O)?

A8: Our proposed format for Geometry, GDT PMI entities is ISO 10303 STEP. With PDM/PLM & Technical data we are looking at various formats including STEP (AP232, AP239), PDF/A and U3D. Our validation rules will be packed as description information within the Archive Information Package (AIP)

<Product knowledge/ Design intent/ Design rationale>

Q9: We understand today's CAD systems (or we may say today's IT) do not allow full representation and exchange of design intent. GD&T information, geometric constraints, parametric information may be regarded to partially represent design intent but it is very far

from full representation. What is the understanding of LOTAR project and what portion of design intent is critically required for long term retention? If you have a concrete plan to realize design intent exchange, please let us know (A.O, K.I, K.M).

A9: The ultimate target of the LOTAR activity is to preserve the full design intent as much as feasibly possible. As technology matures we will be able to preserve more of the design intent. We know that we still have a ways to go but each year with the help of IT solution providers and various participation from technical subject matter experts we get closer and closer to achieving that target.

<Regulatory requirement>

Q10: It is understood that satisfaction of regulatory requirements is a mandatory condition for LOTAR project. What kinds of regulations are taken into account (M.O)?

A10: For the US the requirements come from our Federal Aviation Regulations Part 21 under various sub parts. For Europe they come from EASA Part 21 under similar sub parts etc. These parts describe the Type Certification requirements. There are also a couple of FAA Orders and Advisory Circulars that we comply with.

<Lawsuit requirements>

Q11: It is understood that satisfaction of lawsuit requirements is also a mandatory condition for LOTAR project. What kinds of information are thought necessary to cope with lawsuit requirements, 2D drawing?, 3D model data only?, specification document?, design change request?, inspection report? (M.O)?

A11: All information that you preserve is certainly subject to lawsuits, however, in regards to LOTAR any data relative to type design, certification, non-compliance issues would fall under this category.

<Precise location of annotation>

Q12: Precise location of annotations on a drawing will become more and more important in the future. Does LOTAR have any plan to possess precise location information (K.M)?

A12: With Model Based Definition it becomes more and more critical how the annotations associated and orientated. It becomes even more important when you want to present this information in the future. We are working on solutions to present the data in both polyline and semantic representations giving the end user a choice depending on specific use case scenarios.

<Validation stamp>

Q13: Validation stamp for preventing unauthorized change of data and for guaranteeing authorized production is very important. In what specification do you plan to realize it (K.M)?

A13: This topic is covered in NAS/EN 9300-002 “LOTAR Requirements”.

<Relationship of 3D annotated model and BOM>

Q14: Do you have any plan to guarantee consistency of 3D annotated model and corresponding bill of material? It is frequently the case that drawing related information does not completely fit with manufacturing related information such as BOM, which causes some complexity of data management (K.M).

A14: Our PDM sub-team is currently discussing these requirements. We would solicit your involvement in this activity. This is a major focus area for 2010.

<Locations of multiply used Parts>

Q15: In the development of airplane, a component part having the same part number is multiply used in different locations. Therefore, location information becomes important. Is it included in the target of long term retention? One related question is how plane body coordinate system is represented, that relates to BOM (K.M).

A15: We cover part and product instantiation in NAS/EN 9300-115. This is an area that we want to expand on in 2010. Components can be positioned within the product assembly using absolute coordinate placement methods or by means of mating conditions. Mating conditions are definitions of the relative position of components between each other; for example alignment of an axis of two holes or distance of two faces from one another. The final position of all components is based on these relationships. As far as representing Airplane coordinate systems in a neutral form we are still discussing this capability with our IT solution suppliers.

＜Link information between component part and corresponding CAD file>

Q16: There are links between the two such as “Apply this annotation/specification for manufacturing child-2 part”. Is this kind of link information between a physical product and a CAD file in scope of LOTAR (K.M)?

A16: Yes. This is one of the focuses of our explicit Assembly with PMI proof of concepts we hope to examine this year. This is contingent on resource commitments and interest of the member companies.

<Others>

Q17: Deep discussion within LOTAR project may reveal missing or insufficient functionality of CAD systems. Is it within the scope of LOTAR project to push CAD system vendors aiming at strengthening of CAD systems (M.O)?

A17: This is one of our main objectives. This is one of the main reasons we have invited DS, PTC and Siemens UG to partner with us on developing solutions that are a win win for the industries involved. We need to have a harmonized solution set when it comes to preserving and managing this type of data.

Q18: Source of the stored data

What does it mean by “source of the stored data”?

A18: The source of the stored data is the native form during the authorized release of that data.

Q19: Missing GD&T information

We understand that STEP AP 203 ed2 covers most information required for full semantic presentation. Why you should take stepwise approach such as Polyline /Unicode/Full semantic?

A19: We have mapped the GDT/PMI entities with the capabilities within STEP. STEP as you pointed out covers the majority of entities; however there are still some gaps that we are still developing. We have a table which I can provide you conveying those gaps. This is why we have decided to develop this through phases. Phase I polyline presentation, Phase 2 Unicode Strings and Phase 3 full semantic representation and presentation. We also have a need from many of our member companies to maintain the polyline capability for cost reasons depending on their long term retention strategies.

Q20: Validation rules, properties and relationship with data quality

We'd like to know details of validation rules and properties. If some of them are related with data quality, what are they?

A20: T

Q21: Pilot project

It is written in the project history slide that a pilot project on Part120 V2 and Part125 V1 is run where NIST, DS, UGS, PTC, etc. are involved. Is it within the scope of STEP AP 203 ed2? If anything more are added, what are they?

A21: The proof of concepts that we are running this year are to prove out or validate the full semantic representation and presentation of 3D explicit geometry with PMI for detailed parts and assemblies Part 120V2 and Part 125 respectively. We will be writing recommended practices upon the completion of these POCs.

Q22: Compaction of data size

In aerospace industry, tub information such as (<Part>BODY-101-01<Part>) is used for representing relationship among data such as AP203 or XML. In order to decrease amount of data, abbreviation of tub information had better be discussed. Is it already discussed in LOTAR project (K.M)?

A22: We have had preliminary discussions on this topic under our PMD sub-team and continue to develop those discussions this year. We solicit your involvement in this area as well.

END

(Discussion Paper)

Technical Considerations on PDQ-S Extension

May, 2010
Akihiko Ohtaka

Contents

Page

A. On target discretized shape data 3

1. Types of discretized data..... 3

2. An analysis of target discretized data 3

3. Conclusion..... 4

<CAE mesh data criteria> 4

<Point Clouds data quality criteria> 7

B. Expected content of ISO 8000-300 10

C. On the treatment of Sketch, Feature, Parametrics 11

Appendix-1: A scenario of the effective use of the PDQ-S for realizing data quality defect free collaborative product development 13

A. On target discretized shape data

1. Types of discretized shape data

The followings are typical discretized shape data;

(1) Representation of analysis target shape (FEM, FDM, BEM, etc.)

(2) Representation of measured data(point clouds)

(3) Representation of display data

These are all discretized representation of continuous shape (curve, surface, Brep., etc.). The target of AP219 (Dimensional inspection information exchange) may look similar, but it enumerates necessary features and parameters required in dimensional inspection, and represent them by using existing IRs. Other potential applications with regard to discretized data such as spot welding will also deploy similar approach. Therefore, it seems reasonable to restrict our analysis to (1), (2) and (3) above.

2. Analysis of potential target data types

(1) Mesh data for simulation

There are different analysis methods such as Finite Element Method (FEM), Finite Difference Method (FDM) and Boundary Element Method (BEM). Common requirement in any analysis type for the representation of target shape is that the target shape shall be fully covered by nodes and elements with no gap with adjacent elements. If there is a slit within a model, analysis result will become unreliable caused by spill of energy, etc.

(1)-1: FEM mesh data

FEM is a method overwhelmingly used for simulating behavior of mechanical products. The strength of FEM is flexibility of mesh shape but inappropriate mesh shape can cause unreliable analysis results. This can be prevented by using the same mechanisms for preventing inappropriate shape data described in the first edition of ISO 10303-59 because inappropriate mesh shape and inappropriate Brep shape are similar data quality issues. Since the resource model for representing FEM mesh data is standardized in ISO 10303-52, there is no need to define necessary resource models.

(1)-2: FDM mesh data

Use of FDM is limited to various types of flow simulation, diffusion problems, etc. Low flexibility of FDM mesh shape makes the risk of inappropriate shape mesh limited. There is no resource model for the representation of FDM mesh data, thus, we should develop appropriate new resource model for the representation of FDM mesh data if we decide to address the quality of FDM mesh data. However, limited use of the method today makes it difficult to justify the time and efforts required for developing a new resource model.

(1)-3: BEM mesh data

We need to represent boundary of the target shape by discretized data. Since FEM mesh data can be used for the representation of boundaries, there is no need to develop a new resource model.

(2) Measurement data

The phrase ‘point clouds’ is frequently used for representing discretely measurement data. Actual representation of point clouds may simply be a collection of 3D points or a collection of (3D point + surface normal vector) obtained by 5 axis measurement. In any case, geometric_set as defined in ISO 10303-42 can be used. Therefore, it is not necessary to develop a new resource model. The expected precision of measured data, which is measuring machine dependent, can be assumed to be well known by its users. This implies that the risk of problems caused by unexpected quality defect of measurement data is not very high, on the one hand. But, on the other hand, the amount of data sometimes is more than 10 million measured points (ex. whole passenger car measurement case) which naturally requires the check of the appropriateness of the given data by computer programs. Since the use of point clouds is expanding for effectively using them in design process, we understand that there is enough reason to address the quality of point clouds in the new edition of ISO 10303-59.

(3) Display data

Display data is the result of approximating a target continuous shape by a collection of polygons or polyhedrons. Creation of display data is not time consuming and therefore, it can be repeated as necessary with appropriate precision until the result becomes satisfactory. Different from analysis mesh data, entirety and no gap requirements are not high. It is not expected that quality defect of display data causes significant problem. This implies that we do not have enough justification to address quality of display data in our standardization work.

3. Conclusion

It seems appropriate to challenge quality of analysis mesh data (FEM, BEM) and point clouds data in our standardization work.

＜Draft CAE mesh data quality criteria>

The following draft minimum contents of CAE mesh data quality criteria are proposed to stimulate discussions on concrete criteria;

- Tiny element

Problem: In general, CAE mesh data is created by mesh generation systems where automatic algorithms upon some rules are employed. Resulting mesh data may contain small elements, which will cause unexpectedly long analysis time for some computations.

Measurement: In any finite element type, this problem can be measured by detecting an edge smaller than the given tolerance for each element.

- Acute angle

Problem: Existence of a finite element with acute angle smaller than given tolerance (near contraction) is a reason of inaccurate analysis result.

Measurement: In any finite element type, this problem can be evaluated by detecting an angle of a triangular face shape smaller than the given tolerance.

- Warping element

Problem: Warpness of QUAD element or quadrilateral face of PENTA, HEXA, PYRAMID implies inappropriateness of target shape discretization and is a reason of inaccurate analysis result.

Measurement: Calculate two diagonal edges of the quadrilateral face and compare the distance between two edges with the given tolerance

- Skew angle

Problem: Skewed nature of QUAD element or quadrilateral face of PENTA, HEXA and PYRAMID element implies inappropriateness of target shape discretization and is a reason of inaccurate analysis result.

Measurement: Calculate S = (90° - A) where A is the angle in degrees between the two lines joining the opposite middles of the QUAD. If they are not on a plane, take a parallel line of one line passing by a point of the other line. Then compare S with the given threshold. Too-small skew angle suggests that the element is near-degenerate.

- Taper shape

Problem: Tapered nature of QUAD element or quadrilateral face of PENTA, HEXA and PYRAMID element implies inappropriateness of target shape discretization and is a reason of inaccurate analysis result.

Measurement: Divide the QUAD element into two triangles using the first diagonal, and then the same with the second diagonal.

Compute all four areas A_i.

Compute $A_m = 0.25(A_1+A_2+A_3+A_4)$ and $Q = \underset{i}{Max} \; | A_i - A_m | / A_m$

Q = 0 or Q>0.5 may imply inappropriateness of target shape discretization.

- Aspect ratio

Problem: If a finite element has two vertices that are too close, then it is a near degenerate element, which may cause unreliable analysis result.

Measurement: Calculate Ratio = L_{min} / L_{max} where L_{min} is the minimum length and L_{max} the maximum length of the edges of an element and compare Ratio with the given threshold.

- Free Face

Problem: Caused by erroneous computation of automatic mesh generation system, there may be a free face (a face referenced only once) inside a model (Free face shall appear adjacent to boundary curves). If erroneous free face is left uncorrected, it will cause unreliable analysis result. Care should be taken that there are intentional free face cases. Examples are;

- It may be a case for an acoustical and vibrations analysis where the mesh of the solid having vibrations is thin but the mesh of the surrounding fluid for acoustic waves is coarse. In this case, one acoustic element is in front of several mechanical elements.
- If a surface mesh model and a solid mesh model are connected in non-manifold situation, free faces may appear.
- In molten metal flow simulation, a product shape will be discretized by fine finite elements but surrounding die will be discretized by coarse mesh, which leads to the similar situation as the first example.

It will be difficult to differentiate by computer programs whether the detected free faces are intentional cases or not. Therefore, issuance of a warning message will be appropriate.

Measurement: Find free face from the given (solid) mesh model and evaluate whether or not detected faces are adjacent to boundary.

- Free Edge

Problem: Caused by erroneous computation of automatic mesh generation system, there may be a free edge (an edge referenced only once) inside a model (Free edge shall appear at boundary curves). If erroneous free edge is left uncorrected, it will cause unreliable analysis result. Care should be taken that there are intentional free edge cases. By the same reason mentioned above, issuance of a warning message will be appropriate

Measurement: Find free edge from the given (surface) mesh model and evaluate whether or not detected edges are along boundary.

- Unevenness of mesh size

Problem: Unevenness of a surface mesh in size with that of adjacent ones will cause unreliable analysis result.

Measurement: Calculate L_{max1} / L_{min2} where L_{max1} is the length of the maximum edge of this element and L_{min2} is the length of the minimum edge of the next element and compare it with the given threshold.

- Model size too big

Problem: Too big model size caused by erroneous mesh generation will lead to unexpected calculation time and cost. Appropriate model size depends on the problem to solve (ex. Collision analysis of a whole passenger car will require 10 million points), Therefore, issuance of a warning message to prevent wrong software algorithm will be appropriate.

Measurement: Evaluate if the number of nodes is greater than the given threshold value.

- Wrong Jacobian

Problem: For any volumetric finite element model, too large range of variations of the Jacobian implies too large distortion of the model, which leads to an unreliable analysis result.

Measurement: Evaluate Ratio = J_{max} / J_{min} where $J(u_i,v_i,w_i)$ for i = 1 to r at the r points by the reduced integration method and compare the Ratio with the given threshold.

- Middle point deviation

Problem: When an edge is defined by three nodes, the intermediate node should not be too far from the middle point between the first and the third nodes. Concerned elements are: isoTRIA6, isoQUAD8, isoTETRA10, isoPENTA15, isoPYRAMID13, and isoHEXA20.

Measurement: Calculate Ratio = D / L where D is the distance from the intermediate node to the line going from the first node to the third node and L is the distance from the first node to the third node and compare the Ratio with the given threshold.

- Wrong middle point alignment

Problem: When an edge is defined by three nodes, the intermediate node should not be too far from the middle between the first and the third node. Concerned elements are: isoTRIA6, isoQUAD8, isoTETRA10, isoPENTA15, isoPYRAMID13, and isoHEXA20.

Measurement: Calculate Ratio = A / L where A is the distance between the projection of the intermediate node to the line going from the first node to the third node and the middle point between the first and the third node and L is the distance from the first node to the third node, and compare the Ratio with the given threshold.

＜Draft Point Clouds data quality criteria＞

Different from physical measurement for the purpose of inspection, representation of the target shape itself by sufficiently fine measured data is becoming important from various points of view such as improvement of a CAD data by comparing it with the measured data obtained by measuring physical object corresponding to the CAD data, quick reflection of physical change to the corresponding CAD data by the use of measured data for the changed portion, reflection of expert engineer's expertise incorporated in a physical object into corresponding CAD model(so called 'reverse engineering') , etc.

We will treat this type of measured data as an extension to PDQ-S. Data quality concerns vary depending on the purpose of the use of measured data. Transformation of measured data into free form surface model and deformation of existing surface model by referring measured data are two major target applications. The situation will be significantly different whether we treat measured data just after the completion of measurement or after some processing by computer systems. The latter will include quality of software algorithm which is out of scope of our activity. Therefore, we will mainly treat the former, namely, measured data just after the completion of measurement.

The following criteria will be least necessary set for treating quality of point clouds;

- Too many data

Problem: Appropriate amount of data depends on intended application. For example, fine measurement of a whole passenger car will require 10 million points. If the amount of measured data significantly exceeds the amount expected from intended application, it will cause troubles such as unsuccessful visualization.

Measurement: Check whether the given amount of measured data is bigger than given value or not.

- Unreliable quality of measured data

Problem: If unevenness of the measured data is significant, it is not possible to judge what shape is represented by the given data.

Measurement: Judge the unevenness by a geometric method or by a statistic method.

- Significant noise data

Problem: Measured data naturally includes noisy data, which is the data located more than the given tolerance apart from the expected location. If the amount of noisy data is significant, it will cause unsuccessful data processing.

Measurement: Find singular points by calculating the envelop space where majority of points belong and the distance from each point to the space.

- Significant fine/coarse variation

Problem: This kind of unevenness of point distribution naturally occurs at transition portion from curved shape to planar shape. If this type of unevenness occurs at unexpected portion, it will cause wrong data processing.

Measurement: Calculate aspect ratio of the distance between neighboring points, and compare it with the given threshold.

- Significant deviation of duplicating two sets of measured points.

Problem: Assuming the result of one time measurement is represented by one geometric_set, whole measurement of a physical object to cover it entirely frequently require two or more geometric_sets. In order to prevent potential gap, two adjacent geometric_sets will have some duplication. If the distance from one geomertric_set to the other geometric_set is larger than the given tolerance at duplicated portion, it will make it difficult to estimate the shape of the physical object.

Measurement: Calculate distance between two geometric_sets and compare it with the given threshold.

- Measured data is missing(at concave portion or at marker)

Problem: Lack of measured data at necessary portions where physical object is existing will cause wrong data processing. This kind of problem naturally occurs at concave portion or at marker position. Wrong measurement may cause lack of data at usual locations.

Measurement: Boundary of a physical object can easily be judged from the continuity of measured data. Discontinuity of measured data inside of a physical object at a non-concave portion or at a non-marker position is problematic.

- Difficulty of Character Line identification

Problem: It is very difficult to extract Character lines from measured data. They are represented on CAD surfaces as important characteristics of product shape from conceptual design point of view. However precise extraction(or estimation) of character lines from measured data is technically infeasible with today's measurement technology regardless of measurement methods. This limitation of today's measurement technology significantly decreases usability of the measured data.

- Existence of irregular data

Problem: Irregularity of measured data, which frequently occurs at around product end or hole. If used uncorrected, it will cause wrong data processing.

Measurement: Run noise data detection process at those locations.

B. Expected content of ISO 8000-300

Those to be described in ISO 8000-300 are the followings.

(1) The situation of ISO 8000-300 within whole ISO 8000

(2) How to understand the relationship between ISO 10303 standards which treat nominal representation of product model data and PDQ related standards (ISO 10303-59, ISO 10303-59+, ISO 8000-3xx). This may be called as 'PDQ Big Picture'.

(3) Identification of entire PDQ related standards within SC4 (including ISO 10303-59, ISO/PAS 26183), characteristics of each of them, and mutual relationships.

(4) Compared situation of ISO 8000-3xx and PDQ related standards under ISO 10303.

(5) Big Picture (future goal) of entire PDQ related standards including under ISO 10303 and under ISO 8000.

An analysis for each requirement above is;

(1) It is possible to clearly write down.

(2) ISO 10303 standards aim at precise representation of product model data and no specification is given on the quality of data instance when it is implemented by finite number of effective digits. Industries use ISO 10303 implemented within CAD, CAE, CAM systems. Each CAD, CAE, CAM system is based on its own design principle and the guarantee of the number of effective digits is system dependent. Therefore, data exchange between two different CAD systems, each claiming conformance to ISO 10303, may well results in unsuccessful result caused by data quality problem. It is a common recognition of manufacturing industry including automotive industry and aerospace industry, that unexpected return to previous processes and rework/repair of data caused by quality defect are major reasons of inefficient product development and enormous economy loss, which drastically decrease the effect of big investment on 3D engineering systems. PDQ related standards aim at drastically decreasing or eliminating data quality problems.

    Pragmatic explanation as described above is rather easy. An explanation from data modeling point of view may not be impossible but hard consensus building is expected since there could be two or more different ideas or approaches.

(3) Today's situation can be clearly written.

(4) It is possible to write some principles.

(5) The core principle of standard development is that there shall be strong user needs and support, and that international standardization shall be appropriate. We can not say today that we have completely captured clear needs of international standardization for each constituent of product related data. Not even user

industries such as automotive industry and aerospace industry can clarify future goal of data quality problems in a precise level. This situation will not change in the near future. This shows that the creation of a big picture of PDQ related standards is too early to challenge today.

Above described analysis shows that we can include all the required contents except that corresponding to requirement-(5).

After some discussion within JNC, we have decided to these in ISO 8000-311.

C. On the treatment of Sketch, Feature, Parametrics

<Sketch>

We focus on an aspect of 'Sketch' usage not as a tool to represent variable drawings but as a tool to represent variable section geometry within the context of parametric 3D shape modelling (SASIG PDQ Guidelines also takes the same view point).

Since corresponding resource model exists(ISO 10303-108), there will be no difficulty to address sketch data quality in our activity though its necessity seems low.

Even if a Sketch involves quality defects such as incomplete constraint (over-constraint, under-constraint), that quality defect will quickly be detected and easily corrected when the sketch is used in solid modeling activity. This implies that the risk of the propagation of the quality defect to down stream processes is quite low.

<Feature>

Necessary application features are defined in AP level separately without any common mechanism. This situation is caused by unsuccessful development of generic feature resource model: ISO 10303-48. Implementation of features in any commercial CAD system is not far from macro-shape level, which is quite unsatisfactory from the original feature concept to represent and share design/manufacturing semantics. Though the JAMA's PDQ deployment status report says that three companies are using 'Unresolved feature creation', it is not feasible to challenge from cost/time point of view, since we are required to develop a generic feature resource model from scratch, which will require huge time and cost.

<Parametrics>

There is no difficulty to treat quality of parametric model data since resource models (ISO 10303-55, 108, 109, 111) are completed and existing. We would rather try to add related criteria for promoting deployment of these parametrics standards.

The JAMA's PDQ deployment status report describes its usefulness by reporting that

Missing construction history: 2 companies

Non-evaluated construction history: 5 companies

We will try to enumerate necessary criteria including these two. Least necessity will be:

- Missing Brep modeling construction history

Problem: Construction history corresponding to current Brep model is missing. If left missing situation, there is no way to judge whether or not the current Brep model is a correct one conforming to the intent of the originator.

Measurement: Check one to one correspondence of Brep model and construction history.

- Re-construction results in error

Problem: Erroneous termination of re-construction implies that validation of it against Brep model is not possible and parametric design change is also not possible.

Measurement: Report the reason of the erroneous re-construction by receiveing related information from the target CAD system.

- Inconsistency of a construction history and the pertaining Brep model

Problem: A Brep model obtained by re-construction and the Brep model given do not coincide. This inconsistency creates uncertainty about the correctness of the given model.

Measurement: Check coincidence of two Brep models, one obtained by re-construction and the other given, and report the difference.

Appendix-1: A scenario for the effective use of PDQ-S for realizing data quality defect free collaborative product development

We believe that satisfaction of the following three requirements is essential for realizing quality defect free collaborative product development;

a. Do not create bad quality data (Data causing troubles in downstream processes = narrow, indirect definition)
b. Do not receive bad quality data
c. Do not propagate bad quality data

In order to promote satisfaction of these requirements, corresponding burden of users' activity for that purpose shall be small and the mechanism which guarantees automatic satisfaction of these requirements when engineers work on a prescribed procedure shall be defined.

1. The receiver of data shall check quality of received data against criteria and thresholds which are mandatory to smoothly process his job. Who is responsible when some quality defects are detected depends on whether the received data is directly used or used after necessary transformation. Therefore,

(1) Whether data transformation was performed or not, and

(2) The transformation S/W product and its version if used

shall be recorded.

2. When quality defects are detected,

(1) Order organization/department/data name

(2) Quality criteria and thresholds against which those quality defects are detected and detailed inspection results

(3) Whether data transformation was necessitated or not

shall be recorded.

3. If the same record exists in the past records,

(1) A report to the order company / person showing detailed inspection results is required since there is a possibility that the order company/person is not aware of inappropriate job processing which caused those defects.

(2) If the level of quality defect is significant and continuation of his job is not possible, he shall ask the order company/person to re-issue the data.

(3) If the level of quality defect is not significant, he can improve the data before commencing his job. But, how he changed the data shall be precisely recorded because he is now responsible for the whole data.

4. At the appropriate timings of his job, quality of the latest data shall be checked.
(1) If quality defects are found, data name, quality defects (criteria/thresholds/accuracy and inspection results) shall be recorded.
(2) If there is the same record in the past records as the one detected now, he should look back his work from appropriateness of design/modeling, appropriateness of work procedure, appropriateness of CAD usage and defects of CAD system points of view.

By standardizing work process as defined above and by honestly following the process, quality of work flow, quality of technical work itself, relationship of order /ordered companies will gradually improve and the realization of the requirements-a, b, c will be promoted.
The followings are summarized activities required for order person, ordered person and CAD vendors.
<Order person>
Analysis of quality defects reported from the ordered company/person shall be done for knowing the real reasons why the similar quality defects have been repeated. Potential reasons are;
1) Inappropriateness of work flow or design/modeling process
2) Problematic design method of individual designer or problematic way of using CAD system(s).
3) Inappropriateness or bugs of the CAD functions used.
<Ordered person>
0) Data transformation applied for the given data may be causing detected quality defects. In this case, involvement of the data transformation S/W vendor is required. If the defects detected are vendor's responsibility, the vendor shall provide the improved version.
1), 2), 3) ----- Same as those in <Order person>
<CAD vendor>
Confirm at first the occurrence of quality defect identified by the user by using the same data, same work process on the same circumstances, then identify what function is causing the defect. Bug fix of individual function is a happy case. If the defect is caused by inappropriate numerical precision control mechanism, fix of the issue will take longer time and efforts.

END

A scenario of the effective use of PDQ-S for realizing data quality defect free collaborative product development (A1-A3)

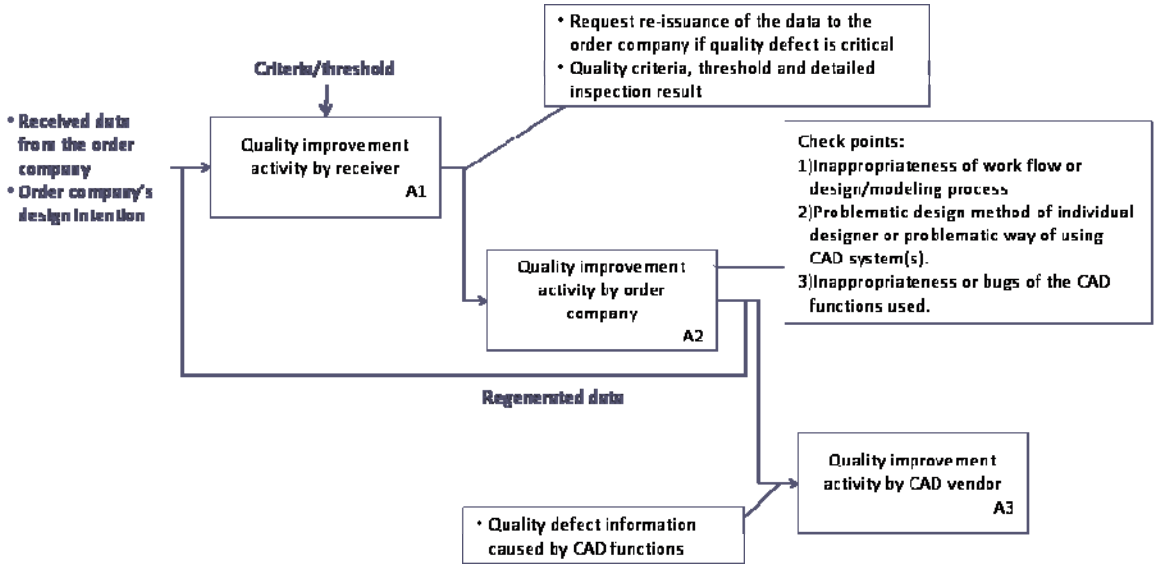

Quality improvement activity by receiver(A1)

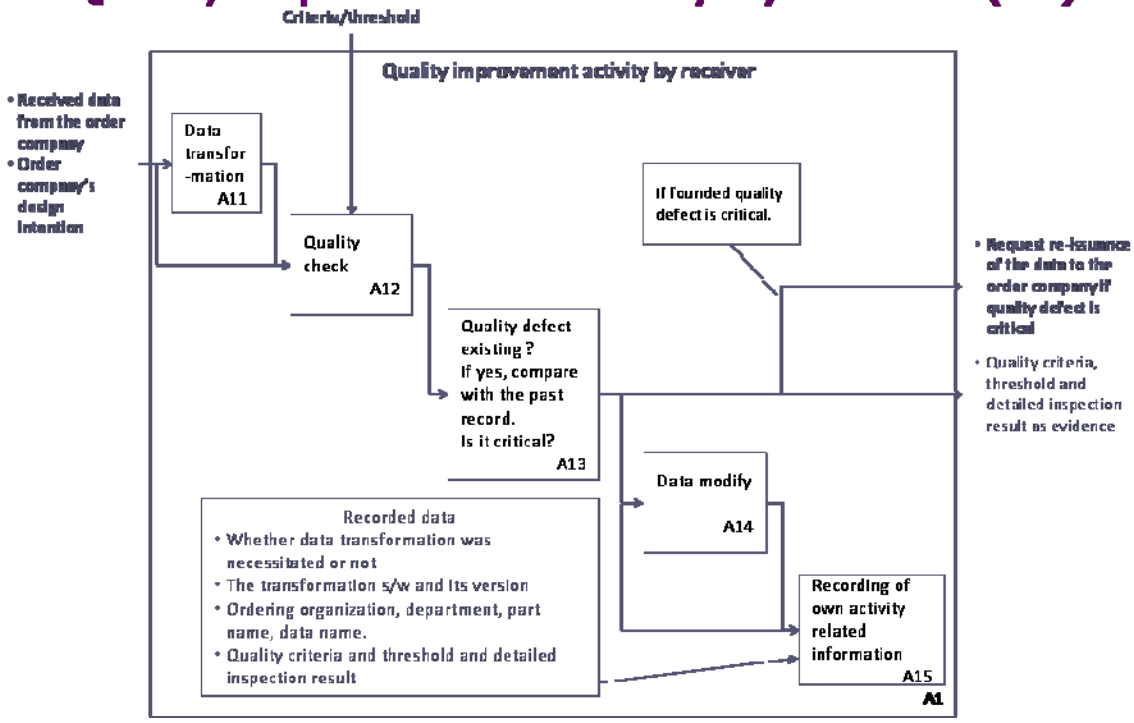

(Discussion Paper)

Business-condition-oriented data quality criteria

2010/5/31 H. Hiraoka

Japan PDQ-S development team

1. Introduction

Data quality criteria based on business conditions are defined in SASIG PDQ Guidelines, but are not included in ISO 10303-59 PDQ-S. These criteria should also be treated in SC4 standard as they are large in number ♣and have strong requirements from users. These criteria are used based on agreement between organizations, each agreed in each case, and hence, the measurement requirements and thresholds for these criteria cannot be described explicitly.

2. Business-condition-oriented data quality criteria

Table 1 shows business-condition-oriented data quality criteria defined in SASIG PDQ Guildelines that are used by multiple JAMA companies. The name of the criteria, its SASIG code, the element to be inspected, its data type and the corresponding measurement are described. The contents are still to be elaborated but measurement in many criteria depends on an external rule defined by the sender and receiver of the data on each case of exchange.

Table 1 Frequently used business-condition-oriented SASIG data quality criteria

criteria	code	Inspected element	Data type	measurement	judgement	comments
2.1.1 Non-standard CAD version	O-CM-CV	CAD system	version	check if consistent with external rule	FALSE	Out of scope because our standard deals with the quality of contents of model.
2.1.3 Non-standard accuracy parameter	O-CM-AP	accuracy	real	check if in the range defined by external rule	FALSE	
2.1.6 Special character used in CAD model name	O-CM-SC	name of CAD model	character	check if special character	TRUE	
2.1.7 Non-standard item name	O-CM-IN	name of item	string	check if consistent with external rule	FALSE	
2.1.8 Non-standard physical file name	O-CM-PN	name of physical file	string	check if consistent with external	FALSE	Out of scope because our standard deals

♣ SASIG PDQ Guidelines include 64 criteria for shape, 63 for “non-shape”, 19 for drawing and 57 for CAE. In this document, we discuss on “non-shape” criteria.

				rule		with the quality of contents of model.
2.1.11 Item data consistency incorrect	O-CM-IC	item data		check if consistent with external rule	FALSE	
2.1.14 Unused encapsulated entities present	O-CM-UP	entity		check if encapsulated and unused	TRUE	
2.1.18 Inconsistent item reference	O-CM-IR	item reference		check if valid reference	FALSE	
2.2.9 Non-standard layer usage	O-GL-LU	layer	element	check if consistent with external rule	FALSE	
2.2.11 Layer group used	O-GL-GL	layer group	number	count	>0	
2.2.13 Non-standard layer group	O-GL-LA	layer group	layer	check if consistent with external rule	FALSE	
2.3.2 Non-reference co-ordinate system active	O-CS-NR	reference co-ordinate system		check if active	FALSE	
2.3.3 Non-standard co-ordinate system orientation	O-CS-NO	co-ordinate system	orientation (left- or right-hand)	check if consistent with external rule	FALSE	
2.3.5 Non-standard unit	O-CS-SU	part unit system		check if consistent with external rule	FALSE	
2.3.6 Non-standard scale	O-CS-SS	part scale	real	check if consistent with external rule	FALSE	
2.4.1 Assembly relationship used	O-AR-AR	assembly	number	count	>0	
2.5.2 History not updated	O-SO-HU	modeling history		check if updated	FALSE	To be dealt in parametrics
2.6.1 Unresolved feature used	O-FE-UF	feature		check if correctly resolved	FALSE	To be dealt in feature
2.7.2 Unused element present	O-EL-UE	element		check if used in product shape	FALSE	
2.8.6 Non-standard element visibility	O-PR-VE	visibility status of element		check if consistent with external rule	FALSE	

3. Modeling principles

The following principles are adopted to deal with the business-condition-oriented data quality criteria shown in Table 1.

(1) The criteria is represented in an application module instead of a resource model

These criteria are not described based on a clear technical base. Their measurement requirements and assessments do not have a general applicability. Because of these features, these criteria are difficult to be represented in a resource part. Instead, we have decided to develop a new application module for these criteria.

(2) The module is developed as an extension of Product_data_quality_criteria module and

Product_data_quality_inspection_result module.

Some business-condition-oriented criteria are not related to shape. Even if they are related to shape, their contents are difficult to be specified clearly in technical viewpoints. For this reason, the module is developed not as an extension of Shape_data_quality_criteria module and Shape_data_quality_inspection_result module, but as an extension of Product_data_quality_criteria module and Product_data_quality_inspection_result module, or modules of general product data quality. See Figure 1 for the relation among PDQ-S modules.

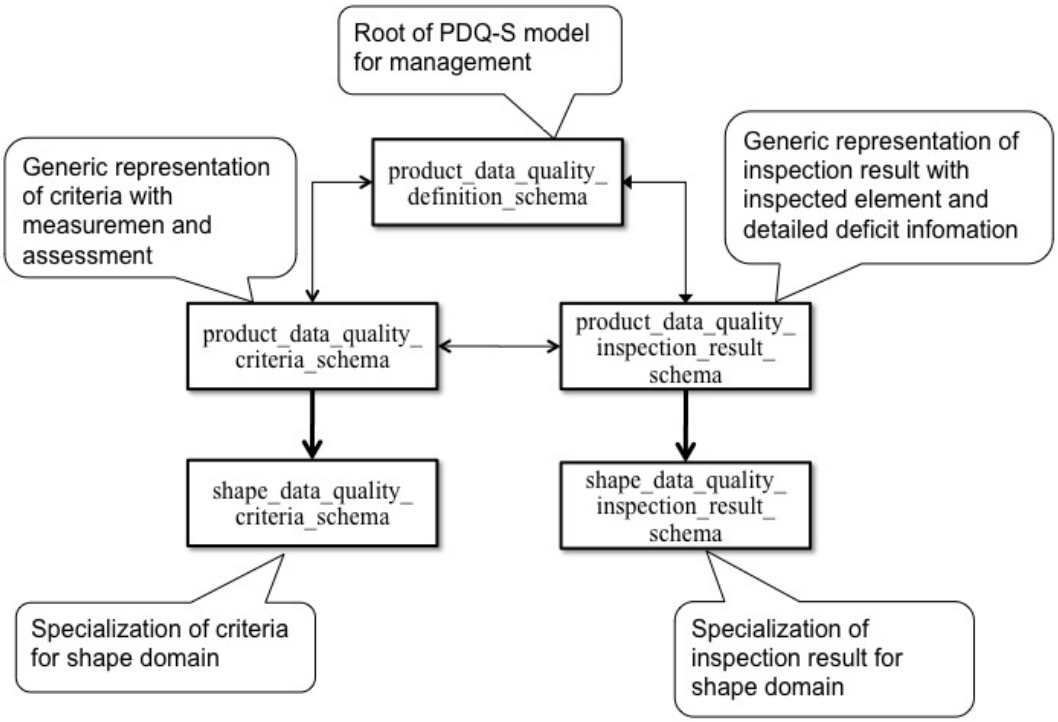

Figure 1 Relation among PDQ-S modules

(3) Measurement of the criterion refers to external documents.

Prior to each data exchange using business-condition-oriented criteria, their contents concerning how to measure the quality and how to assess it are agreed between senders and receivers of the data. Thus, the measurement requirements are defined to refer an external documents on the agreement.

4. Proposed model

A model shown in Figure 2 is proposed based on the principles described above. Following are the points.

(1) External reference of measurement requirements

The entity External_data_quality_measurement_requirement represents the measurement requirement for business-condition-oriented data quality criterion. It refers to the external documents. As the ways of reference, a document, a file or the identification of a document can be selected. (See Figure 3 for external reference mechanism in existing modules.)

(2) Assessment

Logical assessment and numerical assessment can be selected, though the numerical ones where the measured quality is evaluated against a predefined threshold are supposed to be rare for business-condition-oriented criteria.

(3) Inspected element

As it will be enough to identify which element has a low quality for business-condition-oriented criteria, the representation of detailed portion are omitted where the problem occurs in the inspected element.

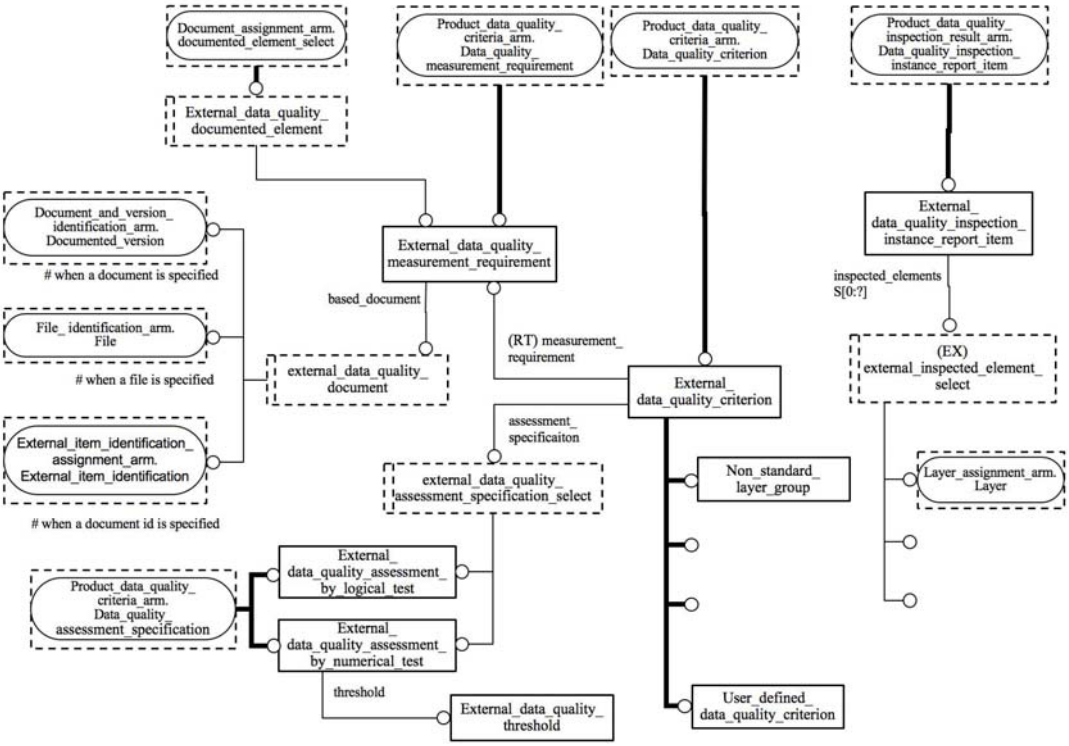

Figure 2 Model for product data quality depending on business conditions

5. Development of criteria

As an example of business-condition-oriented data quality criteria, Non_standard_layer_group is

shown in Figure 2. To develop a business-condition-oriented data quality criterion, the following is to be specified.

(1) Representation of the criterion

The criterion is represented as a subtype of External_data_quality_criterion entity.

(2) Inspected element

Inspected element for the criterion is represented as a selection of extensible select type external_inspected_element_select

(3) External document type

A constraint is added to the criterion on external_data_quality_document select type to restrict the type of external document whether it is specified as a document, a file or the identifier of a document.

(4) Assessment type

A constraint is added to the criterion on external_data_qaulity_assessment_specification_select select type to select whether the type of assessment is logical or numerical.

6. Remaining work

The following work is required to develop the proposed module.

(1) Verification of the model

Checks are required if the model is correctly defined and has enough functionality.

(2) Development of criteria

For each criterion, the explanation, its constraints, the identification of related elements such as inspected elements and the requirements for external referenced document should be developed.

(Appendix) Modules and entities relating to external reference

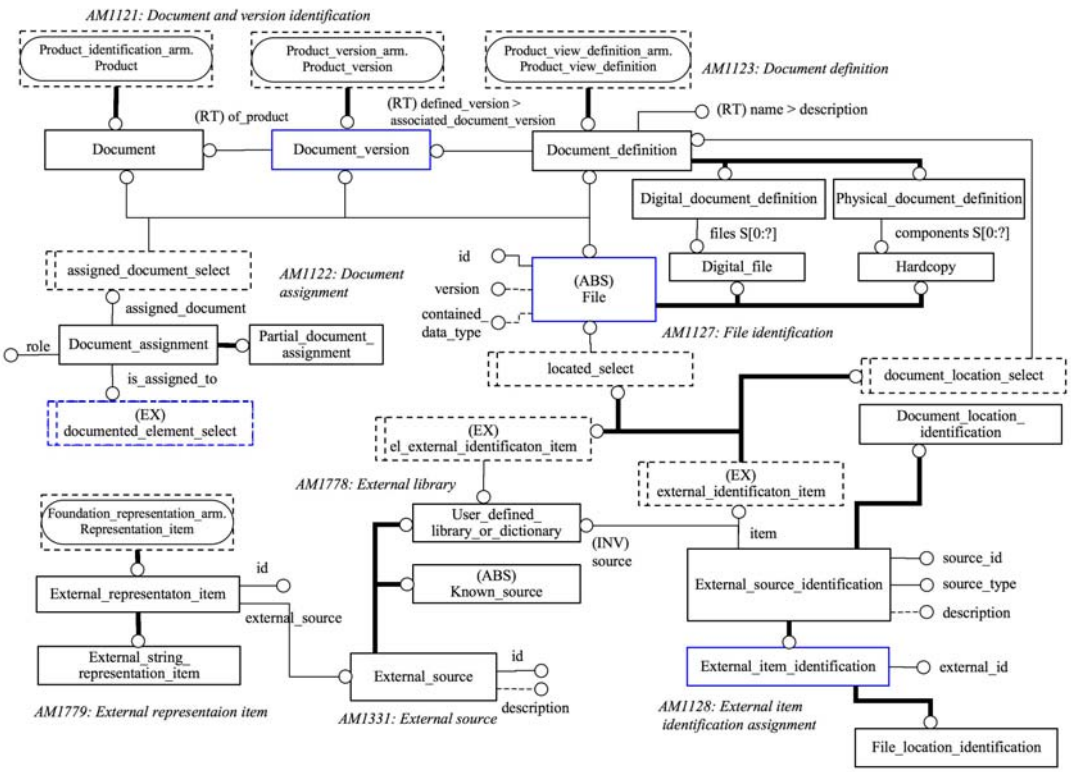

Figure 3 Modules relating to external reference

Expected contents of ISO 8000-311 - Usage guide of PDQ-S –

2010/6/7

Japan PDQ-S development team
Atsuto Soma
Elysium Co., Ltd.

Motivation (1)

- What is ISO 10303-59 (PDQ-S)?
  - published in 2008
  - provides basic mechanism and resources for the representations of quality criteria, measurement requirements and inspection results for general product model data, and in detail for product shape data.
  - includes exhaustive set of shape data quality criteria for resolving real-life shape data quality related problems.

Motivation (2)

- Quality of product data is a new concept in ISO 10303
- The amount of shape data quality criteria included in ISO 10303-59 may make users difficult to effectively and appropriately to select the most suitable criteria for his/her problem.
  - → Development of standard under ISO 8000 as a usage guide of ISO 10303-59.

Expected contents

- The situation of the PDQ-S
- For ease of understanding of the PDQ-S
- Recommended scenarios of the use of the PDQ

1. The situation of the PDQ-S

1-1 Major aim of the PDQ-S and its target data

1-2 The relationship of the PDQ-S and other SC4 standards which deal with nominal representations of product data

1-3 Comparison between PDQ-S and its companion standard ISO/PAS 26183 SASIG PDQ Guidelines

1-1 Major aim of the PDQ-S and its target data (1)

- Major aim
  - Provide data quality criteria widely applicable to all manufacturing industry
  - Improve today's insufficient reliability of PDQ checkers(Different systems, or even different versions of the same system show different results to the same data.)
  - Stronger constraining power
  - Improve association between PDQ checker and PDQ healer
  - Ease of implementation for vendors
  - Extensibility to non-shape quality problems

1-1 Major aim of the PDQ-S and its target data (2)

- Target data
  - Concentrate on three dimensional shape data
    - 3D shape data is the core information
    - Most repair work is dedicated to improve shape data today
    - Future extension to non-shape data are included
  - Concentrate on parametric curves and surfaces, and B-rep data
    - These are majority of 3D shape data transferred and shared today.
    - Quality of shape data with parametric information as a future issue
    - Although use of parametrically represented 3D shape data in explicit form with geometric constraints, implicit form with construction history, or with their mixture are increasing especially in solid modelling environment, it will take some time to enable parametric data exchange since some of the related standards in ISO 10303 have reached to IS level very recently

1-2 The relationship of the PDQ-S and other SC4 standards

- While ISO 10303 standards define representation of product data, PDQ-S defines representation of quality of product data instance.
  - So, it refers instance of STEP data in order to represent target of quality inspection and entities violating quality criteria
  - Extension to native CAD format is future challenge.

1-3 Comparison with SASIG PDQ Guidelines

- Both enumerate concrete measures to eliminate low quality product shape data.
- PDQ-S includes all of the major criteria in SASIG PDQ Guidelines.
  - 5 criteria are removed because they are dependent on limitation of specific CAD system.
- In PDQ-S, measurement requirement is clearly specified in order to avoid deviated results of PDQ check tool.
- PDQ-S has detailed inspection report to represent entities detected by inspection.
  - Not only summary information of inspection such as (No.of inspected instances, No. of quality defect), corresponding to the Quality Stamp of SASIG, but detailed report of quality defect where is the problem and how serious it is can be represented in entity instance level, which is expected to realize better association of PDQ checkers and PDQ healers

			SASIG PDQ Guidelines (PAS26183)	PDQ-S (ISO 10303 - 59)
Target Industry			Automotive	All of the manufacturing industries
Definition of quality criteria	Target Data Type	Geometry	64	86
		Non geometry	63	N/A (Extension is developed now)
		DRAW	19	N/A
		CAE	57	N/A
	Criteria definition		In natural language	Clear definition using EXPRESS language
	Measurement Requirement		N/A	External specification of quality check is stated
Data instances	Requirement		N/A	Selected criteria with threshold, and request of report type can be represented.
	Summary report		Quality stamp (XML)	shape_data_quality_inspection_criterion_report
	Detail report		N/A	shape_data_quality_instection_instance_report
Term of validity			6 years (until Jan. 20129)	Unlimited
Support of non-STEP data			OK (Independent of data type)	Report is restricted to STEP data

Modification for criteria

ID	Criteria name	Difference
G-CU-NT	Non-tangent segments	
G-CU-TI	Tiny curve or segment	
G-CU-IS	Self-intersecting curve	
G-CU-EM	Embedded curves	
G-SU-NT	Non-smooth patches	
G-SU-TI	Tiny surface or patch	
G-SU-NA	Narrow surface or patch	
G-SU-DC	Degenerate surface patch	
G-SU-IS	Self-intersecting surface	
G-SU-EM	Embedded surfaces	
G-SU-FO	Folded surface	
G-ED-TI	Tiny edge	
G-LO-IS	Self-intersecting loop	
G-FA-EG	Large edge face gap	
G-FA-TI	Tiny face	
G-FA-NA	Narrow face	
G-FA-EM	Embedded faces	
G-SH-LG	Large face gap	
G-SO-TI	Tiny solid	

Exactly same

PDQ-S made precise measurement requirements

Criteria has changed
- Embedded curves/surfaces : PDQ-S includes SASIG
  Folded surface : Target of PDQ-S is smaller

Example-1

7.4.48 self_intersecting_curve

A **self_intersecting_curve** asserts that a curve has self-intersection within its domain. The measurement requirement corresponding to this entity requires that the measurement shall detect points on the curve, which are within **interference_tolerance** each other, with arc length distance between them greater than the value determined by multiplying the **interference_tolerance** with **arc_length_distance_factor**. In the case of the closed curve, pairs of points whose arc length is within the **interference_tolerance** of the start point or the end point shall be excluded from the test. For the purpose of this test, a closed curve is one where the distance from the start point to the end point is less than **interference_tolerance.**

NOTE In Figure 22, *d* is the distance between two points on the curve and *l* is the arc length distance between the points.

Figure 22 – Self-intersecting curve

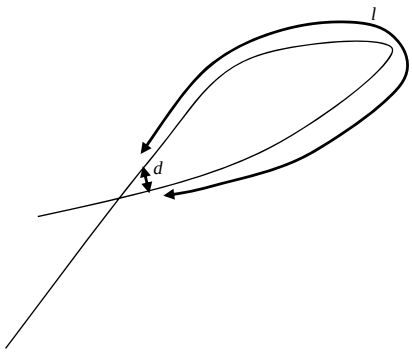

EXPRESS specification:

```
*)
  ENTITY self_intersecting_curve
    SUBTYPE OF(self_intersecting_geometry);
      SELF¥shape_data_quality_criterion.assessment_specification :
        shape_data_quality_assessment_by_logical_test;
      arc_length_separation_factor  : REAL;
      interference_tolerance : length_measure;
    WHERE
      WR1 : validate_measured_data_type(SELF,
            'SHAPE_DATA_QUALITY_INSPECTION_RESULT_SCHEMA.BOOLEAN_VALUE');
      WR2 : validate_inspected_elements_type(SELF,
            ['GEOMETRY_SCHEMA.CURVE']);
      WR3 : validate_locations_of_extreme_value_type(SELF,
            ['GEOMETRY_SCHEMA.POINT_ON_CURVE',
            'GEOMETRY_SCHEMA.POINT_ON_CURVE']);
      WR4 : validate_accuracy_types(SELF,
            ['MEASURE_SCHEMA.LENGTH_MEASURE']);
  END_ENTITY;
(*
```


I.1 Self-intersecting curve : G-CU-IS

Problem description: Curve intersects itself at one or more locations that are not both endpoints.

Measurement: Whether a curve intersects itself within the designated (system or otherwise) accuracy.

Supporting information: A self-penetration/intersection is the existence of an intersecting point of a curve with itself. It is always unintentional, having no design purpose. This error causes problems with other geometrical operations, such as the generation of offsets or faces, as well as with NC programming.

Recommendation: Self-penetration often results from faulty development of offsets (offset distance is larger than the inside radius) or projections (three-dimensional curves in one plane) and are to be avoided wherever possible. Retroactively regenerate the curves correctly.

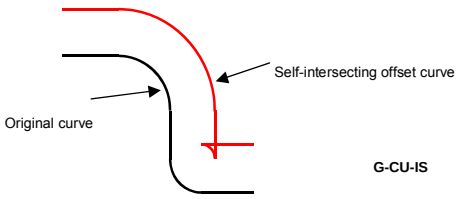

EXAMPLE: SELF-INTERSECTING CURVE

2. For ease of understanding of the PDQ-S

- 2-1 Employed schema structure
- 2-2 Commentary on criteria
  - For easing selection of appropriate criteria, similarity, dependence of shape data quality criteria together with the relationship between threshold and accuracy

2-1 Employed schema structure

- ISO 10303-59(Part59) is an integrated generic resource part which can be used from any application, and it consists of 5 schemas

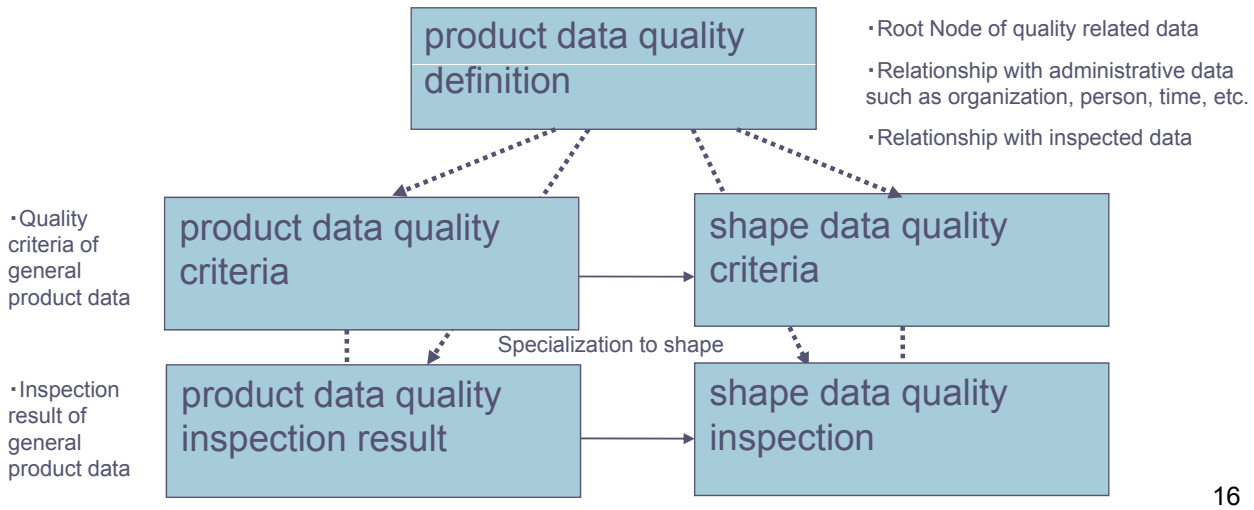

Classification of the shape data quality criteria

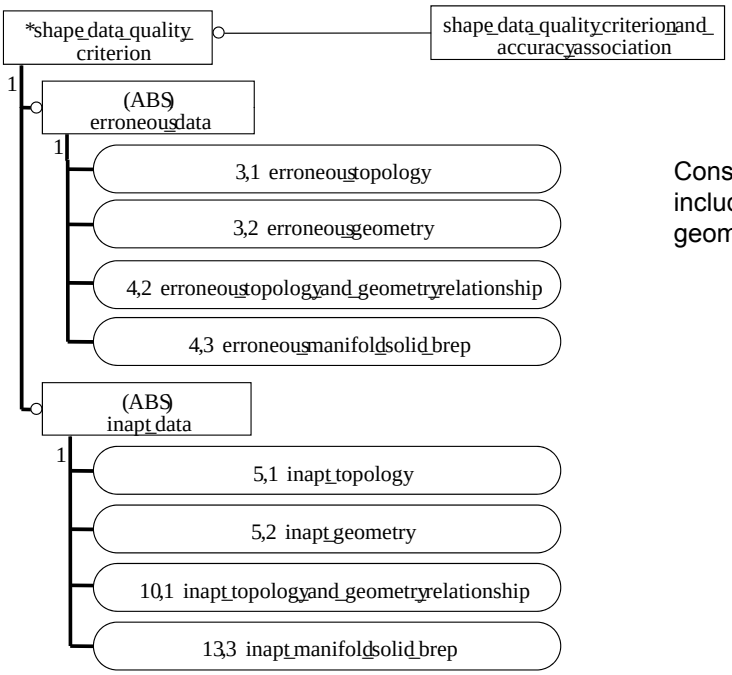

Consists of 86 criteria including SASIG's geometry related criteria.

2-2 Commentary on criteria (1)

- Classification of criteria
  - Criteria of PDQ-S is divided into "erroneous_data" and "inapt_data."
  - Problems classified as 'erroneous data' are those that violate logical consistency of the product data structure. In other words, it could be said as mathematically invalid data.
  - Problems classified as 'inapt data' are those that are obviously unfavourable for most applications though they are not mathematically invalid.
  - There are 17 criteria classified as 'erroneous data' and 59 as 'inapt' data.

2-2 Commentary on criteria (2)

- Classification of inapt data
  - In the standard document, inapt data is further classified into ‘inapt topology’, ‘inapt geometry’, ‘inapt topology and geometry relationship’ and ‘inapt manifold solid brep.’
  - On the other hand, there are sub-category under the criteria group above.
    - “self-intersecting”, “nearly degenerate”, “overlapping”, “over complex” and so on.
  - So, explanation according to the characteristics above will help understanding of users.

2-2 Commentary on criteria (3)

- Classification based on importance
  - Criteria in ‘inapt data’ has different characteristics.
    - Criteria related to basic accuracy of shape
      - Criteria for gap between entities those for nearly degenerated entities
    - Criteria to detect serious shape defects.
      - self-intersection, G1 discontinuity in an entity, zero surface normal…
    - Criteria to detect minor shape defects
      - Many in inapt_geometry and inapt_topology_and_geometry_relationship.
    - Criteria which is applicable only for limited use case.
      - free edge, G1/2 discontinuity between faces…
    - Criteria concerning effectiveness
      - over complex…
  - Explanation according to this aspect will help users understand the criteria and select appropriate ones for their purposes.

2-2 Commentary on criteria (4)

- Similarities and dependencies among criteria
  - There are criteria which are closely dependent each other.
    - e.g. “gap_between_edge_and_base_surface “, “gap_between_faces_related_to_an_edge “ and “gap_between_pcurves_related_to_an_edge “
  - Which criteria to use depends on usage of the data, especially on what kind of system data will be used. In order to judge it, correct understanding of similarities, differences and dependencies of those criteria is necessary.

2-2 Commentary on criteria (5)

- Threshold and accuracy
  - In PDQ-S, we have two different concept “threshold” and “accuracy” both of which are input of PDQ check tool.
  - “threshold” is value to be compared with some measurement for judgment of inspection result.
  - “accuracy” defines how accurate the measurement value of inspection is. This value is required because almost all of the inspection include convergence calculation.
  - So, “accuracy” value shall be at least one digit smaller than “threshold” value if specified.
  - Distinction between those values will be clearly explained.

3. Recommended scenarios of the use of the PDQ

- Essential requirements for realizing quality defect free collaborative product development;
  - a. Do not create bad quality data (Data causing troubles in downstream processes = narrow, indirect definition)
  - b. Do not receive bad quality data
  - c. Do not propagate bad quality data
- But…
  - Corresponding burden of users' activity for that purpose shall not be significant
  - The mechanism which guarantees automatic satisfaction of these requirements when engineers work on well defined procedure is required.

3.-1 Receiving data

- The receiver of data shall check quality of received data against criteria and thresholds.
- Who is responsible when some quality defects are detected depends on whether the received data is directly used or used after necessary transformation. Therefore,

  (1) Whether data translation was performed or not, and

  (2) The translation S/W product and its version if used
- shall be recorded.

3-2. When defects are detected…

(1) Order organization/department/data name

(2) Quality criteria and thresholds against which those quality defects are detected and detailed inspection results

(3) Whether data translation was necessitated or not

- shall be recorded.

3-3. When defects are detected…(cont)

- If the same record exists in the past records,

(1) A report to the order company / person showing detailed inspection results is required since there is a possibility that the order company/person is not aware of inappropriate job processing which caused those defects.

(2) If the level of quality defect is significant and continuation of his job is not possible, he shall ask the order company/person to re-issue the data.

(3) If the level of quality defect is not significant, he can improve the data before commencing his job. But, how he changed the data shall be precisely recorded because he is now responsible for the whole data.

3-4. Checking latest work data

At the appropriate timings of his job, quality of the latest data shall be checked.

(1) If quality defects are found, data name quality defects (criteria/thresholds/accuracy and inspection results) shall be recorded.

(2) If there is the same record in the past records as the one detected now, he should look back his work from appropriateness of design/modeling, appropriateness of work procedure, appropriateness of CAD usage and defects of CAD system points of view.

3-5. Improving quality

- By standardizing work process as defined above and by honestly following the process, quality of work flow, quality of technical work itself, relationship of order /ordered companies will gradually improve and the realization of the requirements-a, b, c will be promoted.
- The followings are summarized activities required for order person, ordered person and CAD vendors.

3-6. Summarized activity of order person

- Analysis of quality defects reported from the ordered company/person shall be done for knowing the real reasons why the similar quality defects have been repeated. Potential reasons are;
- 1) Inappropriateness of work flow or design/modeling process
- 2) Problematic design method of individual designer or problematic way of using CAD system(s).
- 3) Inappropriateness or bugs of the CAD functions used.

3-7. Summarized activity of ordered person

- 0) Data transformation applied for the given data may be causing detected quality defects. In this case, involvement of the data transformation S/W vendor is required. If the defects detected are vendor's responsibility, the vendor shall provide the improved version.
- 1), 2), 3) ----- Same as those in <Order person>

3-8. Summarized activity of CAD vendor

- Confirm at first the occurrence of quality defect identified by the user by using the same data, same work process on the same circumstances, then identify what function is causing the defect. Bug fix of individual function is a happy case. If the defect is caused by inappropriate numerical precision control mechanism, fix of the issue will take longer time and efforts.

A scenario of the effective use of PDQ-S for realizing data quality defect free collaborative product development(A1 – A3)

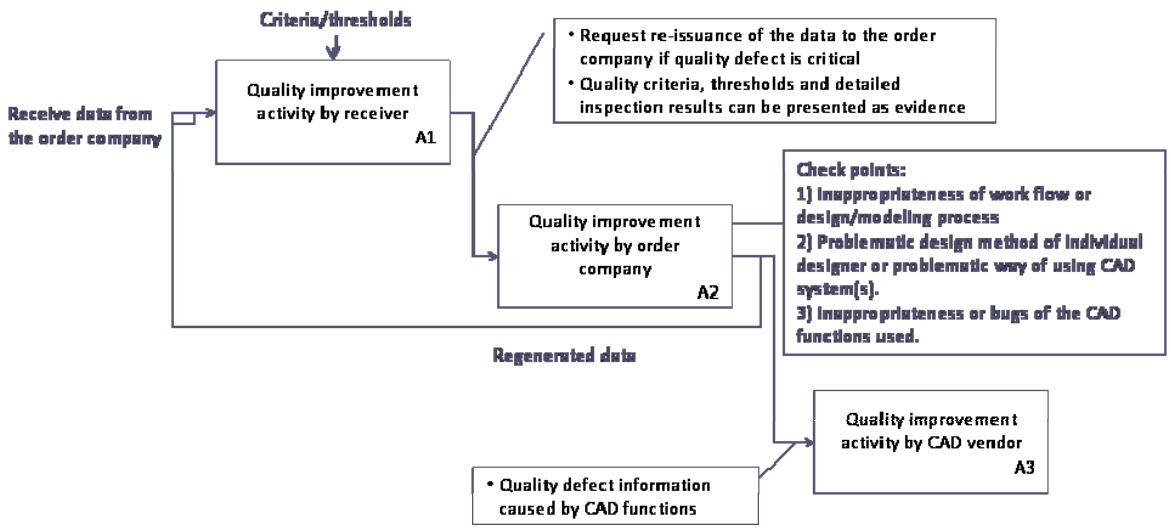

Quality improvement activity by receiver(A1)

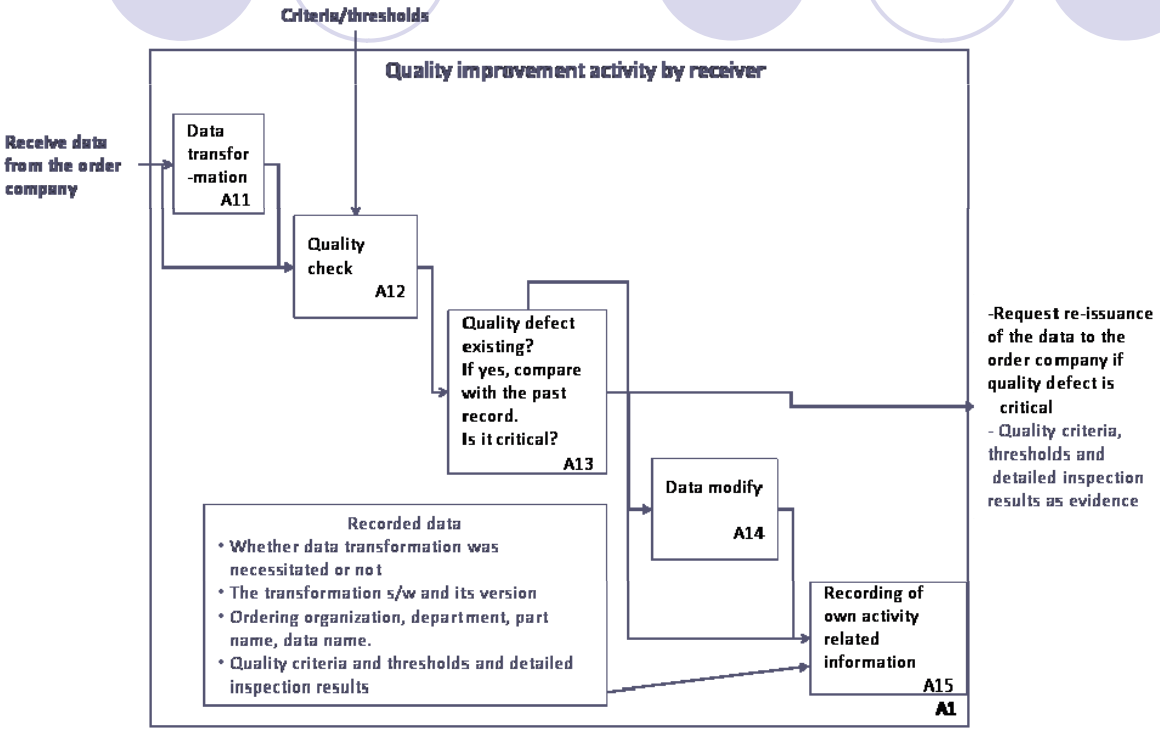

END

Status of PDQ Standard Extension

- Towards data quality assured collaborative product development -

June 2010
Japan National Committee for ISO TC184/SC4(JNC)
Chairman: Akihiko Ohtaka

PROGRAM

1. Background
2. History of JNC discussion on PDQ-S extension
3. Status of NWIP for PDQ-S extension
4. Potential contents of the new PDQ standards

Appendix: A scenario of the effective use of the PDQ-S for realizing data quality defect free collaborative product development

1. Background

(1) ISO 10303-59(PDQ-S: Product Data Quality for Shape) was published as an IS in October, 2008.

(2) Just after the publication, SASIG decided, in the SASIG/Paris meeting, to adopt PDQ-S as a replacement of shape related criteria of the SASIG PDQ Guidelines(see the next slide).

(3) SASIG and JNC jointly decided in the Paris meeting to collaboratively enhance PDQ-S in order to cover wider PDQ related issues.

SASIG PDQ/ JNC agreement(Paris, Oct.,2008)

WG Proposal for the Future of SASIG PDQ (1/2)

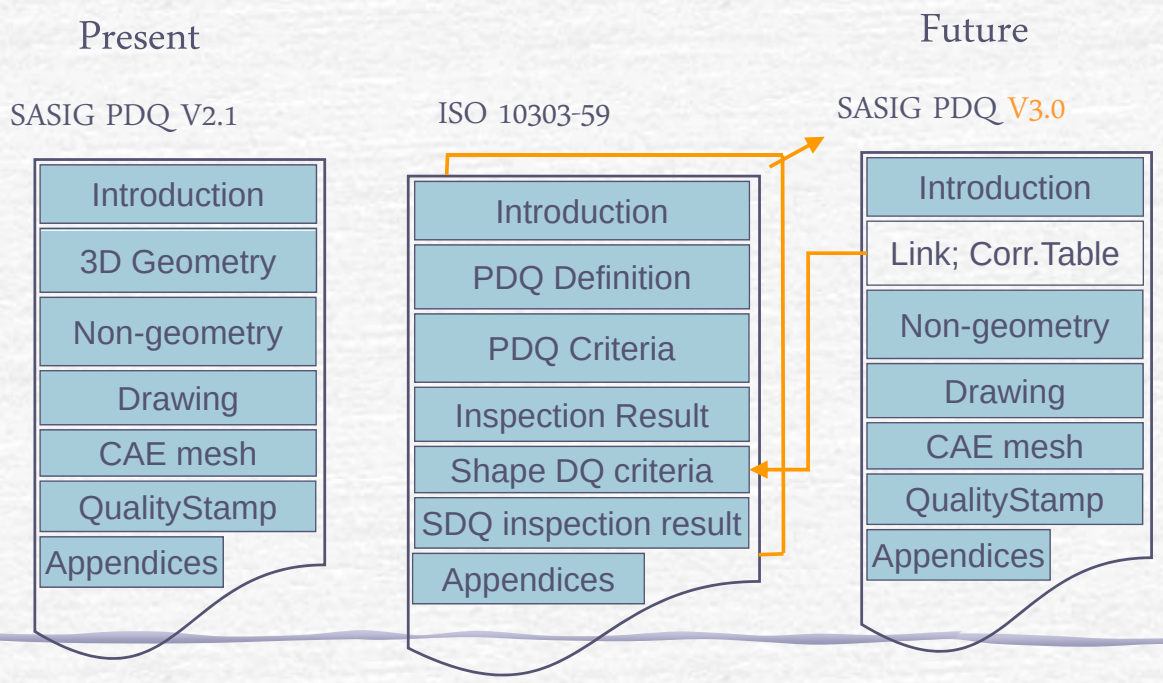

2. History of JNC discussion on PDQ-S extension

(1) Two committees were initiated in spring 2009 under JIPDEC for promoting PDQ standard extension

- PDQ requirement gathering committee

  consists of PDQ experts from JAMA/JAPIA, representatives from aerospace industry, automotive die industry, electronic equipment/parts industry and some experts of manufacturing preparation

- PDQ standard development committee

  consists of STEP experts who developed PDQ-S

(2) LOTAR project (Boeing, Airbus, ProSTEP, etc.) agreed to communicate for removing double efforts in the area of long term data retention

3. Status of NWIP for PDQ-S extension

JNC submitted a NWIP (New Work Item Proposal) for extending ISO 10303-59(PDQ-S) in April 2010 and its ballot started on 8th of May.

<Potential deliverables of the NWIP>

- ISO 10303-59 edition-2: quality of discretized shape data
- ISO 10303 non-shape data quality module
- ISO 8000-311: Usage guide of PDQ-S

4. Potential contents of the new PDQ standards

(1)ISO 10303-59(PDQ-S) edition-2

■ Enhancement of PDQ-S for dealing with discretized shape data is intended. CAE mesh data, point clouds data are within the scope.

■ Some improvements of ISO 10303-59 edition-1 will also be included.

(2)ISO 10303 non-shape data quality module

■ In order to cope with business condition oriented non-shape data quality criteria as enumerated in the ISO/PAS 26183: SASIG PDQ Guidelines, a module will be developed making use of product_data_quality_criteria schema and product_data_quality_inspection_result schema of PDQ-S.

(3)ISO 8000-311

An usage guide of ISO 10303-59(PDQ-S) will be developed under the umbrella of ISO 8000(quality of industrial data) where

■ the situation of PDQ-S will be explained clarifying the aim and target data of PDQ-S, relationship of product data covered by most SC4 standards and product data quality covered by PDQ-S and similarities and differences of PDQ-S and SASIG PDQ Guidelines.

■ contents of PDQ-S will be explained for ease of understanding focusing on schema structure employed, similarities and differences of shape data quality criteria and the relationship of threshold and accuracy.

■ Recommended scenarios of the effective use of PDQ-S will be presented from various view points;

- Recommended process for detecting quality defects and for removing them

- Various use cases such as quality requirement representation, quality declaration, quality authorization, harmonization of checkers and healers.

- Design/manufacturing activity oriented or target object oriented guide may also be included.

Appendix: A scenario of the effective use of PDQ-S for realizing data quality defect free collaborative product development

We believe that satisfaction of the following three requirements is essential for realizing quality defect free collaborative product development;

a. Do not create low quality data (Data causing troubles in downstream processes = narrow/ indirect definition)
b. Do not receive low quality data
c. Do not propagate low quality data

In order to promote satisfaction of these requirements, corresponding burden of users' activity for that purpose shall be small and the mechanism which guarantees automatic satisfaction of these requirements when engineers work on a prescribed procedure shall be well defined.

A scenario of the effective use of PDQ-S for realizing data quality defect free collaborative product development (A1-A3)

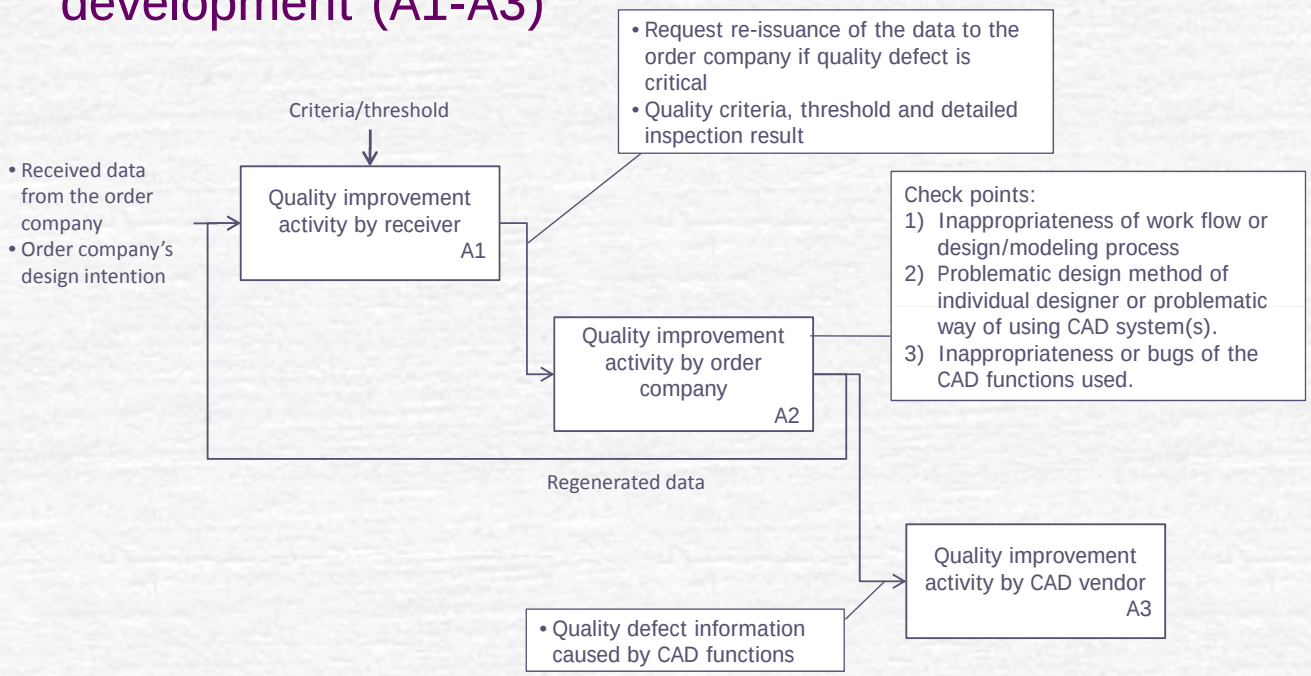

Quality improvement activity by receiver(A1)

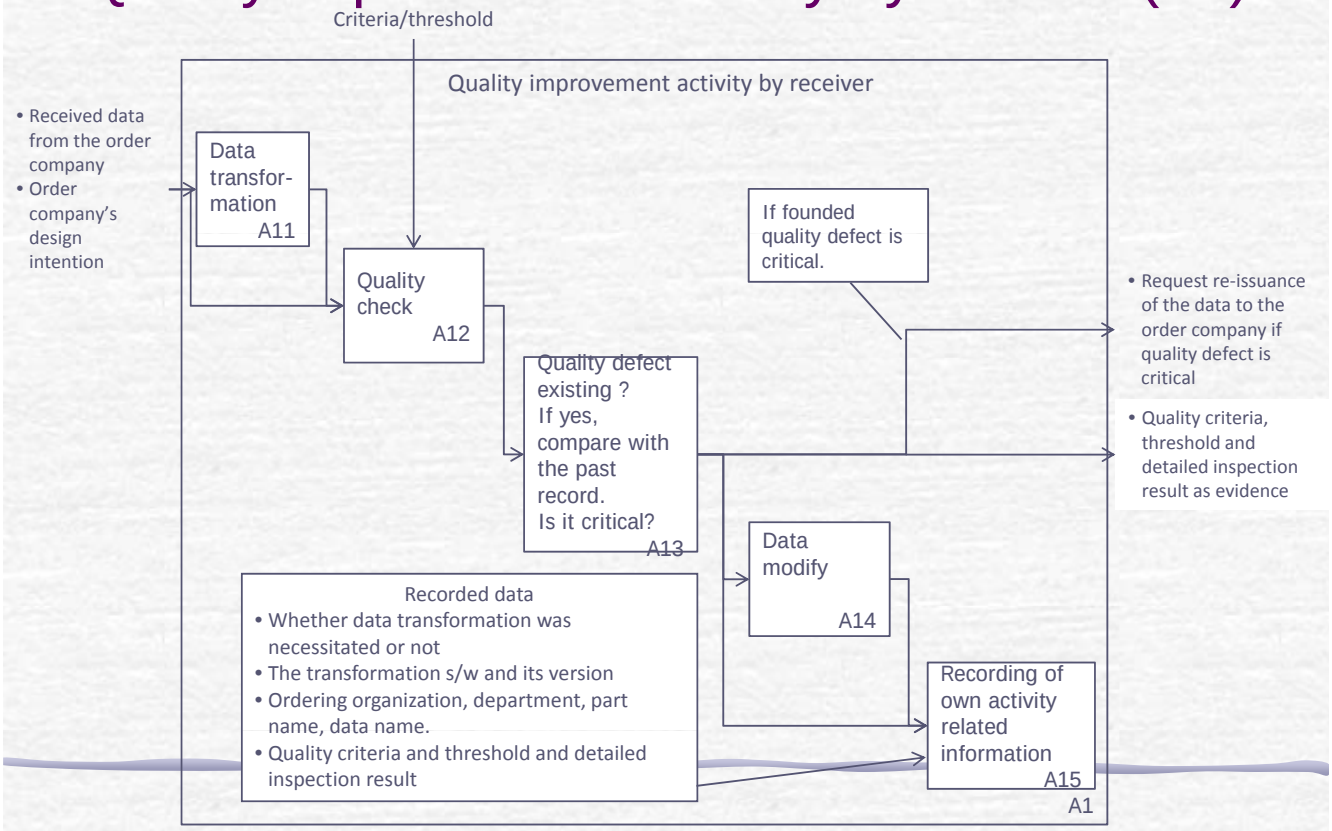

END

PDQR10-02-08

A Validation Technology for 3D CAD Data

ELYSIUM Co., Ltd.
Atsuto Soma

June, 2010

ELYSIUM ©2003 ELYSIUM

Elysium's data comparison technology

- Validation Products/Projects
- Use Cases
- Comparison Scheme
- Comparison Examples
  - Assembly
  - Shape
    - Global
    - Element-wise
  - PMI
    - Semantic
    - Graphic
    - Fidelity Check Points
  - View

ELYSIUM ©2003 ELYSIUM

Comparison products/projects

- Commercial product
  - Shape comparison
- Comparison projects
  - Shape, assemblies, PMI, view
  - CATIA V5 -> JT conversion validation (HONDA)
    - Validation
  - Pro/E -> NX
    - Translation and validation
  - OneSpace -> NX
    - Translation and validation

ELYSIUM ©2003 ELYSIUM

Use Case 1 – Validation -

- In case of long term data archiving

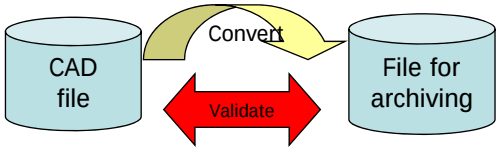

- In case of CAD migration/conversion

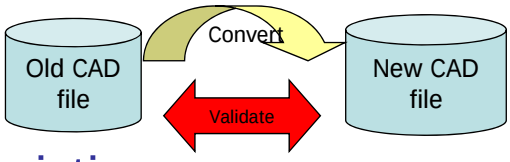

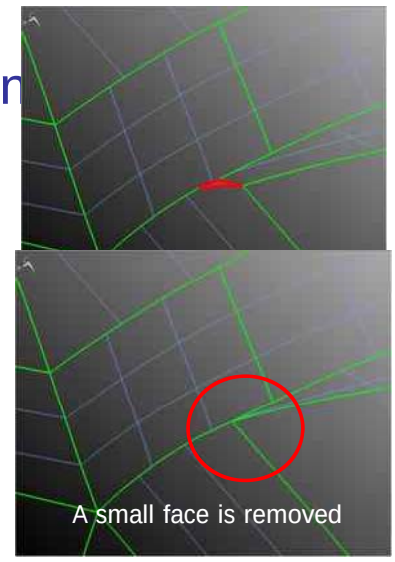

- Characteristics
  - Input file formats are different
  - Differences are small
  - Differences are unintentional, caused by:
    - Approximation (typically very small)
    - Removal of small entities
    - Shape modification by library of target CAD (or format)

ELYSIUM ©2003 ELYSIUM

Use Case 2 – Design Change -

- When a new revision of a part or an assembly is released, data receivers want to know exactly what portion of the shape is modified

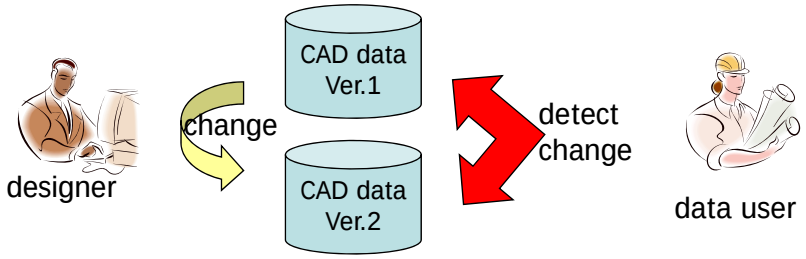

- Characteristics
  - Input data are from the same CAD
  - Changes can be big
  - Changes are intentional

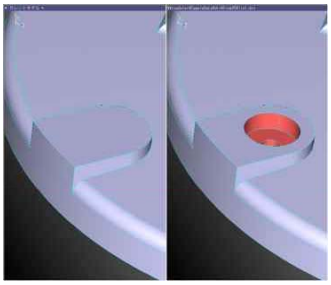

ELYSIUM ©2003 ELYSIUM

Comparison scheme

- *"Detect differences from given 2 CAD data"*
- Information extraction and adjustment is necessary

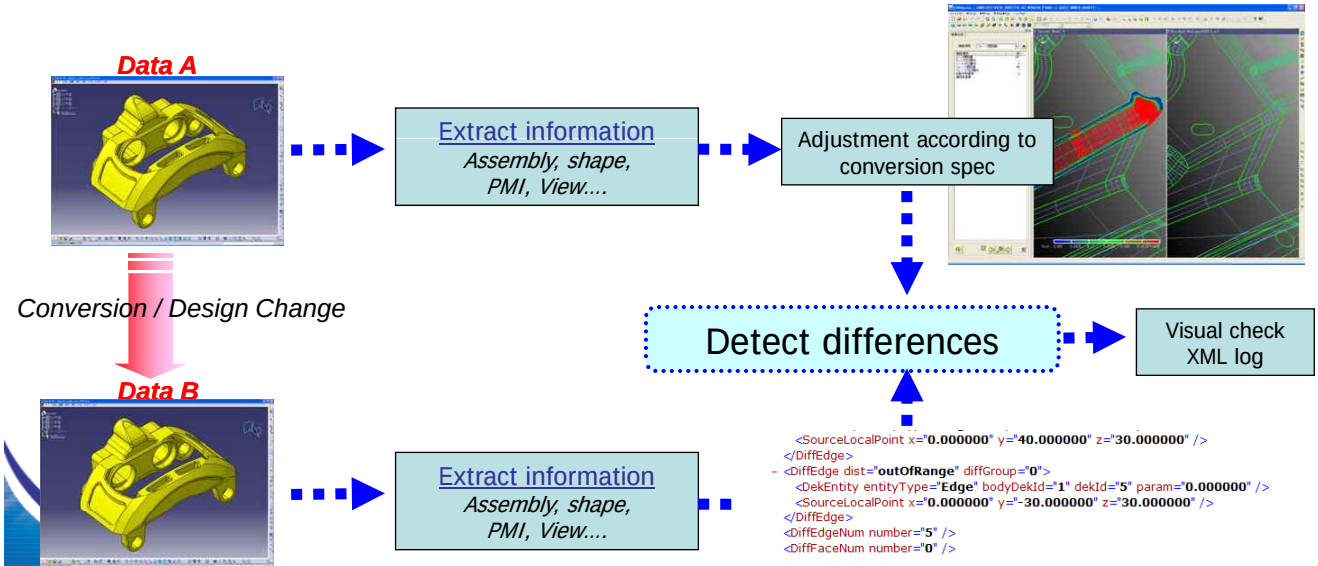

ELYSIUM ©2003 ELYSIUM

Comparison specification

- Exhaustive set of CAD data validation criteria
  - 25 for assembly tree
  - 45 for component part shape element
  - 192 for PMI
  - 29 for view (capture)
- For each criteria
  - Check representation in a CAD system(s)
  - Check conversion specification
  - Define how to adjust extracted information, when necessary
    - When geometric set in CATIA is converted as parts body in JT, and if we don't want to detect the difference as failure of validation, we need to adjust information extracted from CATIA.
  - Decide whether to check the criteria or not

Classification of difference and distinguishing real difference from that caused by conversion spec is a big issue

ELYSIUM ©2003 ELYSIUM

Example

Item		CAD spec		Conversion Spec.	Validation
		CATIA	JT		
Assembly	Parts number	O	Name	O	O
				x	x
				x	x
				x	x
	Source	O		x	x
	Description	O		x	x
	User Property	O	O	Name Type	x
Instance	Color/Transparency	256			O
	Show/No Show	O	x	Converted as DesignGroup named as "Visible"	Via instance path
	Pickable	O	x	x	
	Name	O	x	Converted as "InstName"	
	Description	O		O	x
	Matrix	O	O	x	O
	User Property	O	O	LAYER	x
	Active/Inactive	O	x	Converted as DesignGroup named as "Active"	O
Instance Path	Color/Transparency	O	x	x	x
	Show/No Show	O	x	Expanded in assembly tree?	Expand trees to check
	Pickable	O	x	x	x
Part	Parts number	O	Name	O	O
	Revision	O		x	x
	Definition	O		x	x
	Name	O		x	x
	Source	O		x	x
	Description	O		x	x
	User Property	O	O	Type CAD_PART_NAME LAYERFILTER2000 LAYERFILTER2001 ACTIVELAYERFILTER	x

According to CAD system/format

According to conversion

What to compare/validate

ELYSIUM ©2003 ELYSIUM

Examples of information adjustment

- Conversion of “geometric set” in CATIA into JT
  - Mapped as parts (JtkPart) without hierarchy
- Conversion of “active/inactive” of instance path in CATIA V5 into JT
  - Mapped as design group named as “active”
- Conversion of FTA of CATIA V5 into JT
  - Converted as user property, not as built-in property in new JT format

ELYSIUM ©2003 ELYSIUM

Comparison process flow

1. Compare assembly trees
2. For all the sub assemblies and parts mapped in step 1:
   1. Compare shape
   2. Compare PMI (FTA)
   3. Compare view (capture)

ELYSIUM ©2003 ELYSIUM

Assembly comparison

- Two purposes
  - Detect difference
  - Map sub-assemblies and parts between two trees
- Difference to be detected
  - Tree hierarchy
    - Tree hierarchy may change due to conversion specification.

      -> Need to be distinguished from error
  - Name
  - Color

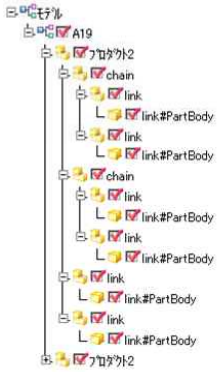

ELYSIUM ©2003 ELYSIUM

Shape comparison

Both for B-rep and polygon

For B-rep,

Two modes of shape comparison

Global shape comparison

Fast

Suitable **for detecting design change**

Element-wise shape comparison

Precise

Suitable **for conversion results validation**

※1:Only for free edges
※2:Only for vertical differences
Extension/trimming will ignored

Classes of shape difference	Edge (free or not)		Face				
	Geometry	Topology	Geometry		Topology		Continuity
	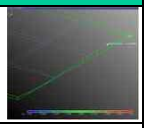	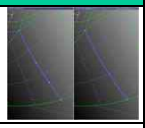	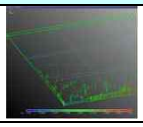		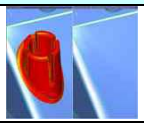	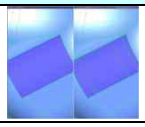	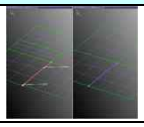
	Displacement	**Breaking/ Merging**	**Small displacement**	**Large Displacement**	**New features**	**Breaking/ Merging**	**Broken continuity**
Global	△ ※1	×	△ ※2	○	○	×	×
Element-wise	○	○	○	○	○	○	○

Element-wise shape comparison

- Map edges and faces in two parts and compare geometry
- Small change (order of coincident tolerance) can be detected.
- Topological changes can be detected.
  - Removal of small entities
  - Merging/breaking faces for closed shape
  - Etc..
- Error count based on element number

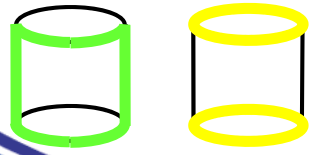

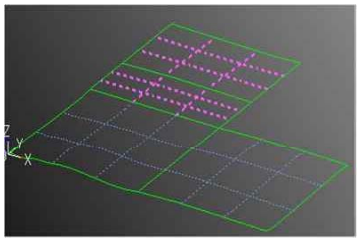

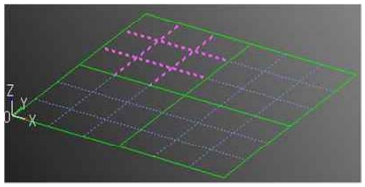

ELYSIUM ©2003 ELYSIUM

Global shape comparison

- Fast calculation
- Ignore topological change if surface location is the same
- Ignore extension/trimming of faces
  - E.g. The planar face (red arrow) in the left figure
- Error count based on connected faces with difference
  - E.g. Error count of the left figure is 1.

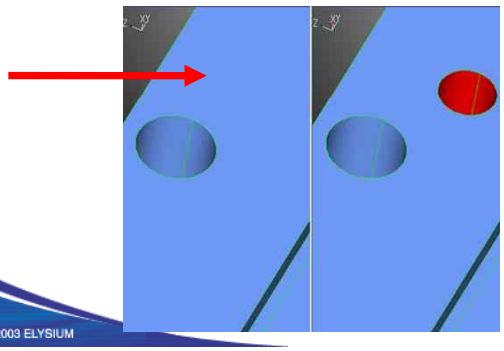

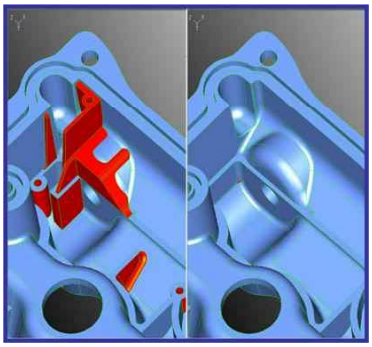

ELYSIUM ©2003 ELYSIUM

PMI Comparison (1)

3 methods of PMI comparison

- Semantic information
  - Shows missing semantic information
- Graphic representation
  - Shows semantic information is displayed differently
- Selective graphic representation
  - Defines significant check points for graphic representation and compares only that points
  - Avoid excessive difference detection by graphic representation method

ELYSIUM ©2003 ELYSIUM

PMI comparison (2)

- Examples of graphic difference
- Apply precise comparison of curves to polylines

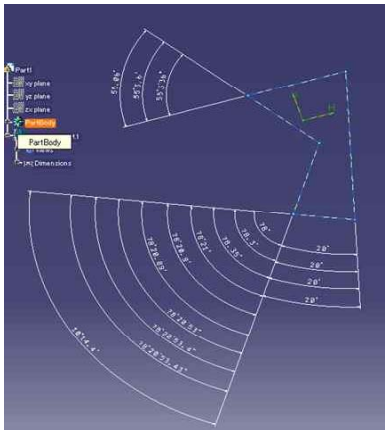

Missing sketch lines

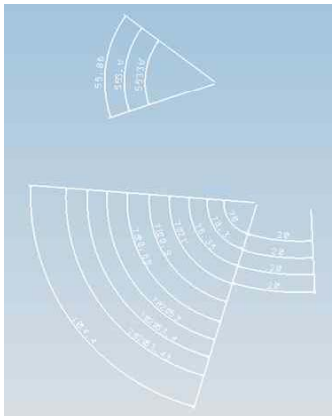

Bold italic

Missing text style

Normal

V5

JT

ELYSIUM ©2003 ELYSIUM

PMI comparison (3)

- Examples of semantic information difference
- Figures below show a case where visual representation is perfect while the shown text is not stored as a property value.

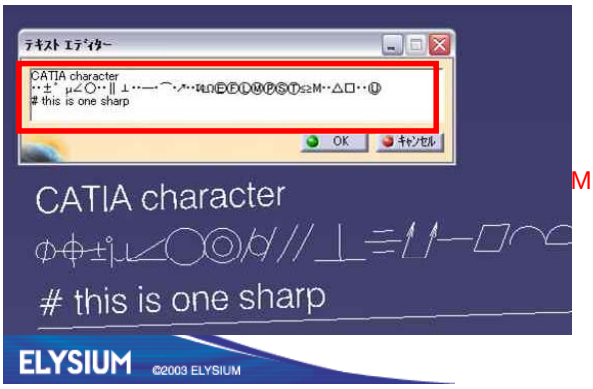

Missing property value

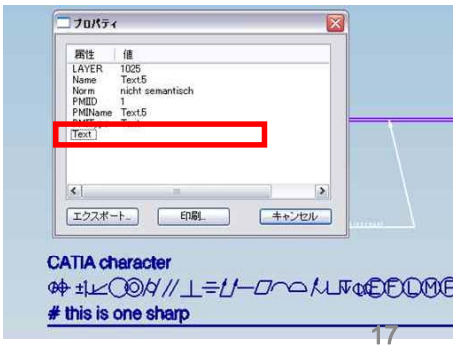

PMI comparison (4)

- Another approach of graphic comparison “Fidelity check-points”
- Instead of comparing all graphic polyline representation, define check points and compare them.
  - Example

Leader stub point location	mm x 3	Note	
Text box center location	mm x 3	Note	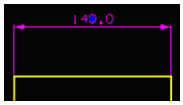
Arrow head location	mm x 3	Note	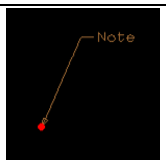

PMI Comparison (5) – remastering tool -

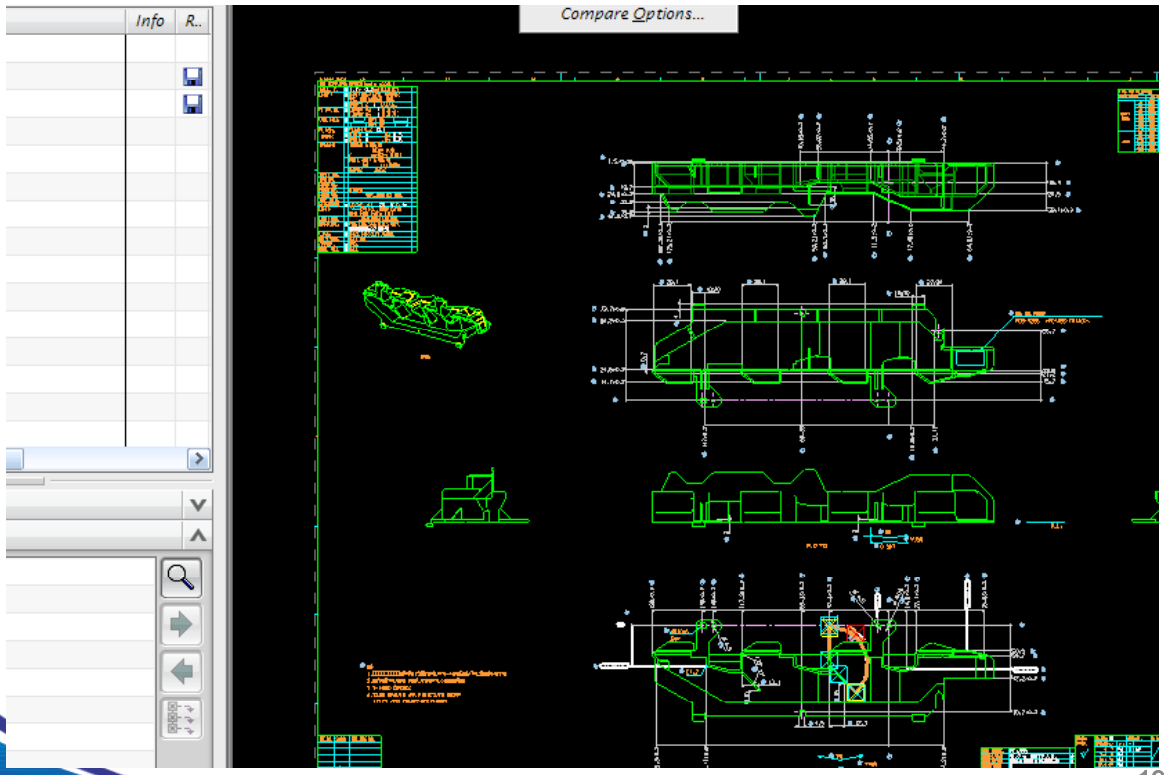

ELYSIUM ©2003 ELYSIUM

View comparison

- Example of view difference (extended scene)

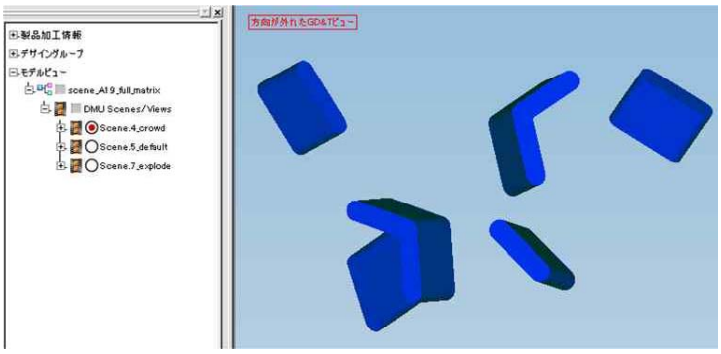

ELYSIUM ©2003 ELYSIUM

Conclusions

- Next step of Elysium's comparison technology is to make it general software supporting various CAD systems and various ways of data conversion.
  - Flexible ways to adjust information extracted from CAD is necessary
  - Script for interpretation of structures, properties.....
  - Flexible ways to select comparison target

ELYSIUM ©2003 ELYSIUM

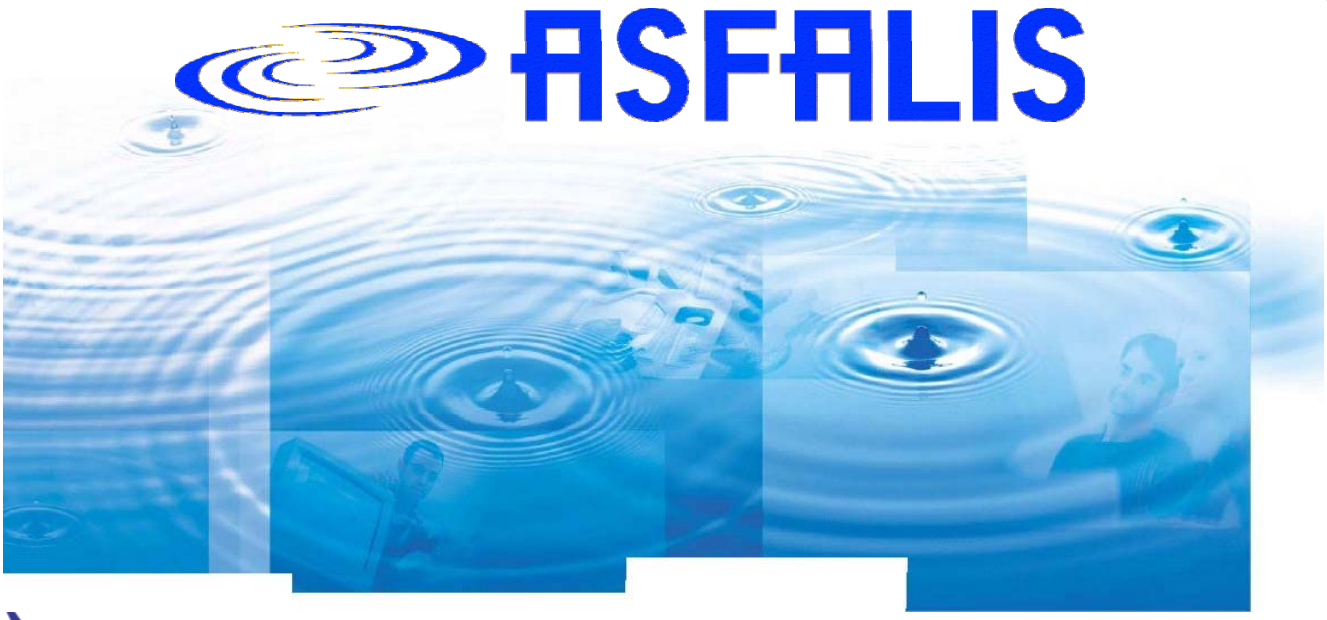

ELYSIUM ©2003 ELYSIUM

PMI Quality Validation

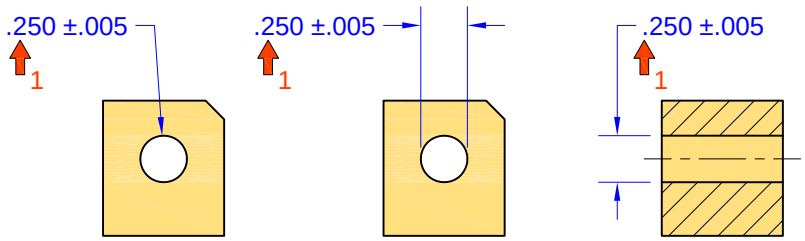

1. Type Error - Dimension Missing Diameter Symbol in Size Dimension

Figure 1-1 - Type Error - Dimension Missing Diameter Symbol in Size Dimension

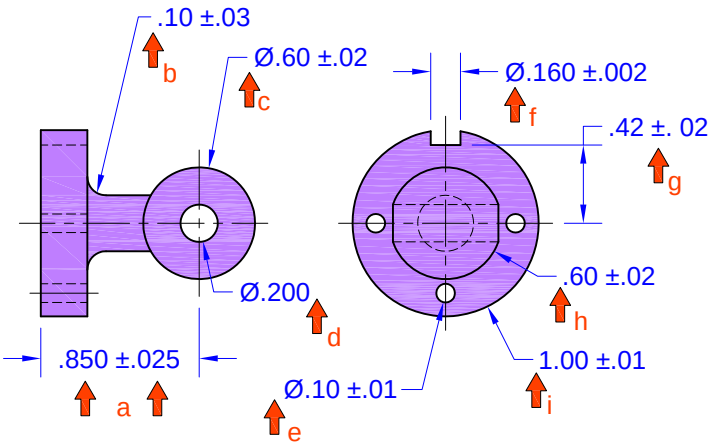

Figure 1-2
Various Dimensioning Errors

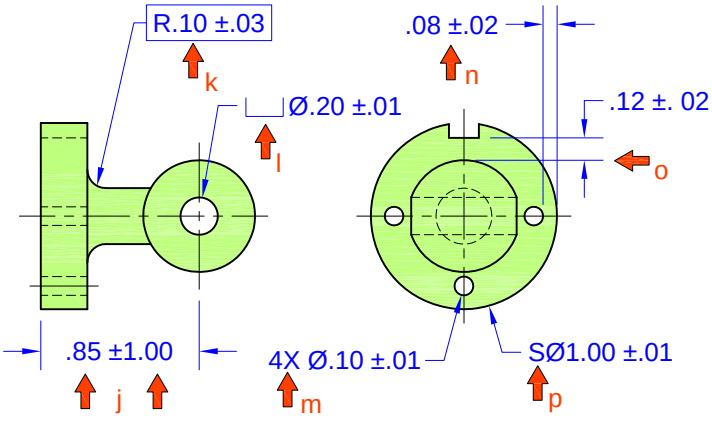

Figure 1-3
Various Dimensioning Errors

a. Directly Toleranced Dimension Use Error - Used to locate or orient features (ASME Y14.41)
b. Type Error - Dimension - Missing R or CR symbol for radius feature
c. Type Error - Dimension - Missing "S" in SØ symbol for spherical feature dimension
d. Missing Tolerance Error - Missing tolerance for directly toleranced dimension (non-basic)
e. Quantity Error - "nX" quantity specification missing
f. Type Error - Dimension - Inappropriate diameter symbol specified for width feature dimension
g. Type Error - Dimension - Directly-toleranced dimension used where a basic dimension should be used - to locate or orient features (ASME Y14.41)
h. Type Error - Dimension - Missing SØ symbol for spherical feature dimension
i. Type Error - Dimension - Missing Ø symbol for cylindrical feature dimension
j. Tolerance Magnitude Error - Tolerance value is greater than the dimension value
k. Inappropriate Basic Dimension Frame - Frame shown around directly toleranced dimension
l. Inappropriate Shape Symbol - Counterbore symbol shown on feature that is not a counterbore
m. Quantity Error - "nX" specifies wrong quantity
n. Inappropriate origin or terminus of a dimension - Dimension to or from the edge of a cylindrical feature (hole or shaft)
o. Dimension Origin and Terminus Error - Directly-toleranced dimension to or from a typically inappropriate feature or element, such as the tangent edge of a sphere
p. Type Error - Dimension - Inappropriate SØ symbol for cylindrical feature dimension

© Copyright Advanced Dimensional Management LLC – 2010 – All Rights Reserved

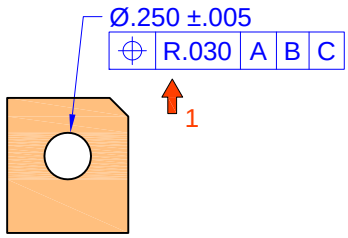

Figure 2-1 - Geometric Tolerance Zone Shape Error - Geometric Tolerance Specified with a Radius Symbol R

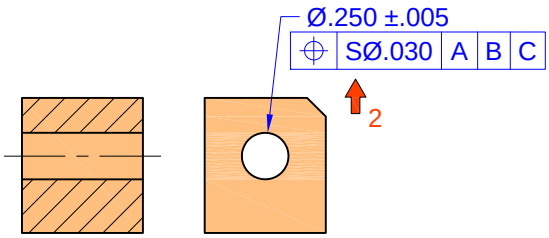

Figure 2-2 - Geometric Tolerance Zone Shape Error - Spherical Tolerance Zone Specified for a Cylindrical Feature of Size

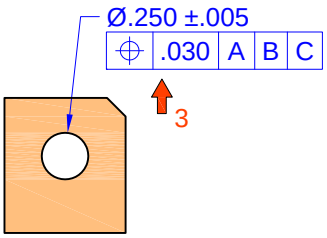

Figure 2-3 - Application Error - Leader-Directed Positional Tolerance Applied to a Round Feature Without a Diameter Symbol

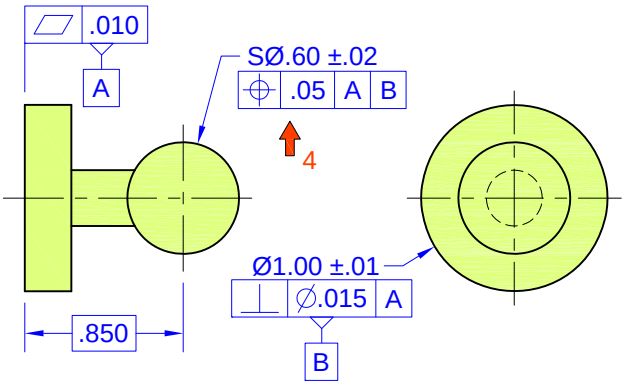

Figure 2-4 - Geometric Tolerance Zone Shape Error - Missing Spherical Diameter Symbol in Positional Tolerance Feature Control Frame - Orientation of Parallel-Plane Tolerance Zone Unclear

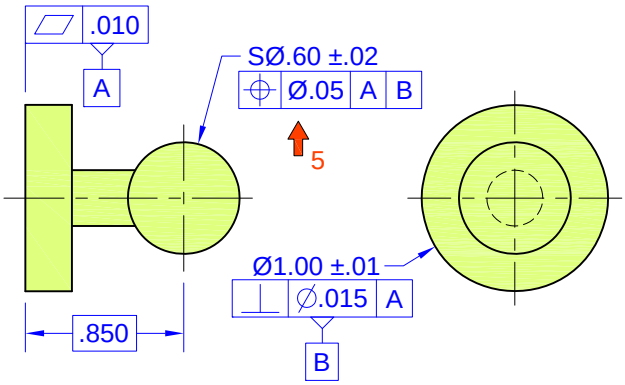

Figure 2-5 - Geometric Tolerance Zone Shape Error - Missing Spherical Diameter Symbol in Positional Tolerance Feature Control Frame - Orientation of Cylindrical Tolerance Zone Unclear

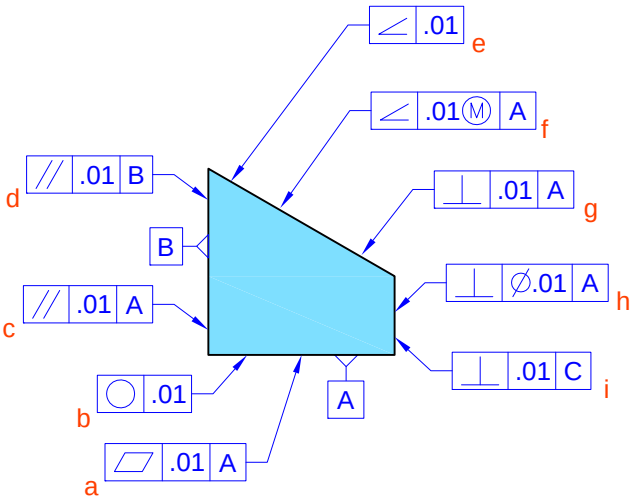

Figure 2-6
Various Geometric Tolerancing Errors

a. Unauthorized Datum Feature Reference Error - Form tolerance applied with datum feature reference
b. Tolerance Application Error - Form tolerance (Circularity) applied to inapplicable feature type
c. Tolerance Application Error - Orientation tolerance (Parallelism) applied where a different tolerance should be specified (Perpendicularity)
d. Self-Referential Datum Feature Reference Error - Datum Feature B toleranced to Datum B
e. Missing Datum Feature Reference Error - Orientation tolerance must Reference a Datum Feature
f. Material Condition Modifier Error - Modifier applied inappropriately to feature without size
g. Tolerance Application Error - An orientation tolerance (Perpendicularity) applied to where a different tolerance should be specified (Angularity)
h. Tolerance Zone Shape Error - Diametral tolerance zone specified inappropriately
i. Unspecified Datum Feature Error - Geometric tolerance references undefined Datum Feature

PMI Errors - 2

© Copyright Advanced Dimensional Management LLC – 2010 – All Rights Reserved

PMI Quality Validation

Dimensioning and Tolerancing per ASME Y14.5M-1994

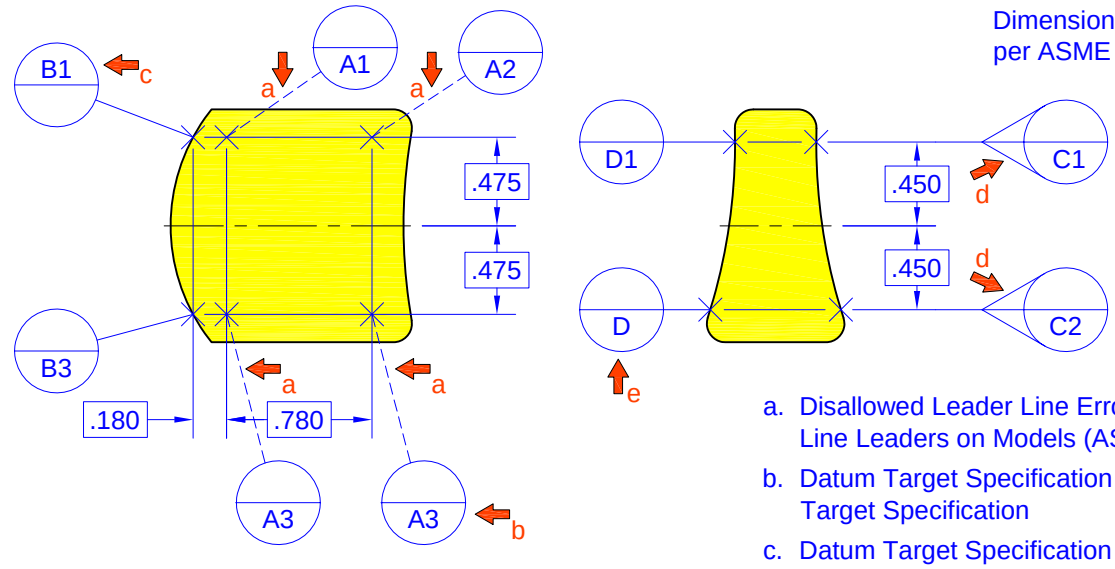

Figure 3-1

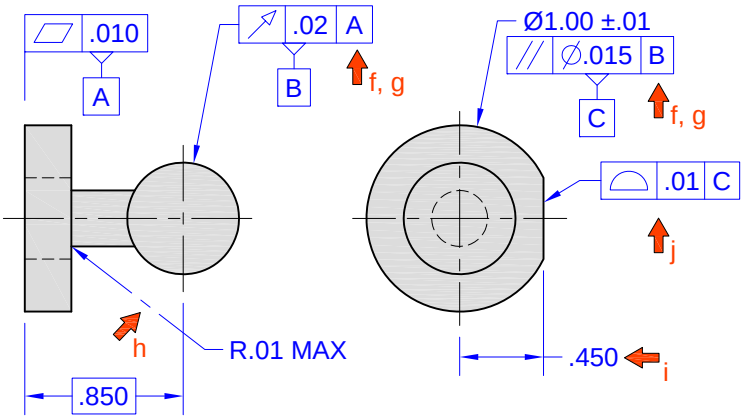

Figure 3-2

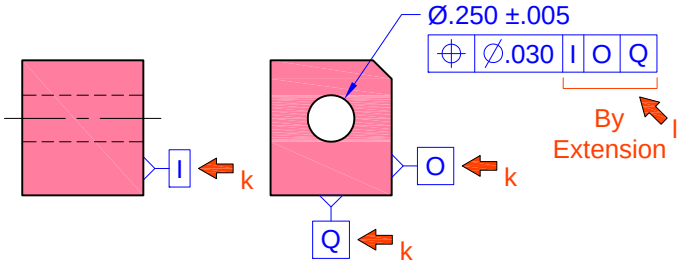

Figure 3-3

Dimensioning and Tolerancing per ASME Y14.5-2009 or per ASME Y14.5M-1994

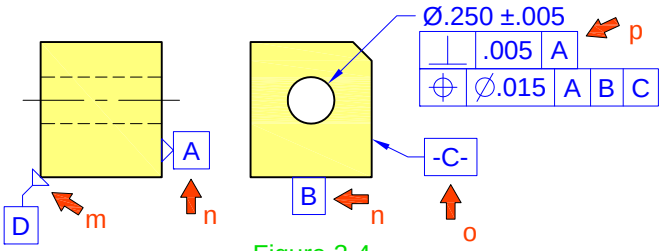

Figure 3-4

a. Disallowed Leader Line Error - Use of Hidden Line Leaders on Models (ASME Y14.41)

b. Datum Target Specification Error - Duplicate Target Specification

c. Datum Target Specification Error - Incorrect Datum Target Specification - Format error

d. Standard Reference Error Error - Movable Datum Target Symbol used with ASME Y14.5M-1994 without referencing ASME Y14.8-1996 or later

e. Datum Target Specification Error - Invalid Specification - Missing Numeric Suffix

f. Datum Feature Reference Type Error - Wrong type of datum feature referenced (Runout requires a datum axis and cannot be parallel to a single datum center point)

g. Datum Feature Reference Type Error - Insufficient Degrees of Freedom constrained by referenced datum features

h. Inappropriate Leader Line Error - Center line, phantom line, etc. (Violation of best practice)

i. Type Error - Dimension - Basic dimension must be used where profile tolerance controls orientation and/or location of a surface

j. Form/orientation/location controlling profile applied to surface oriented/located using directly toleranced dimension

k. Datum Feature Specification Error - Inappropriate Datum Feature Letter Specified

l. Datum Feature Reference Error - Inappropriate Datum Feature Letter Referenced

m. Datum Feature Symbol Error - Attachment Error - Ambiguous Specification

n. Datum Feature Symbol Error - Incomplete Datum Feature Symbol Used

o. Datum Feature Symbol Error - Wrong Datum Feature Symbol Used

p. Orientation tolerance without diameter symbol to directed cylindrical feature with a leader

PMI Errors - 3

© Copyright Advanced Dimensional Management LLC – 2010 – All Rights Reserved

a. Arrowhead / Terminus Error - Leader Line - Leader directed to surface within feature outline should terminate in a dot (ASME Y14.41) [Also Attachment Error]

b. Direction Dependent Tolerance Error - Missing supplemental geometry indicating direction tolerance applies

c. Feature of Size Dimension Attachment Error - Size dimension and tolerance directed to/attached to only one surface of width feature of size

d. Application Error - Leader directed to surface within feature outline should terminate in a dot (ASME Y14.41)

e. Geometric Tolerance Zone Shape Errors - Inapplicable Symbol - Inappropriate diameter symbol specified for width feature dimension

f. Arrowhead / Terminus Error - Leader Line - Leader directed to surface within feature outline should terminate in a dot (ASME Y14.41) [Also Attachment Error]

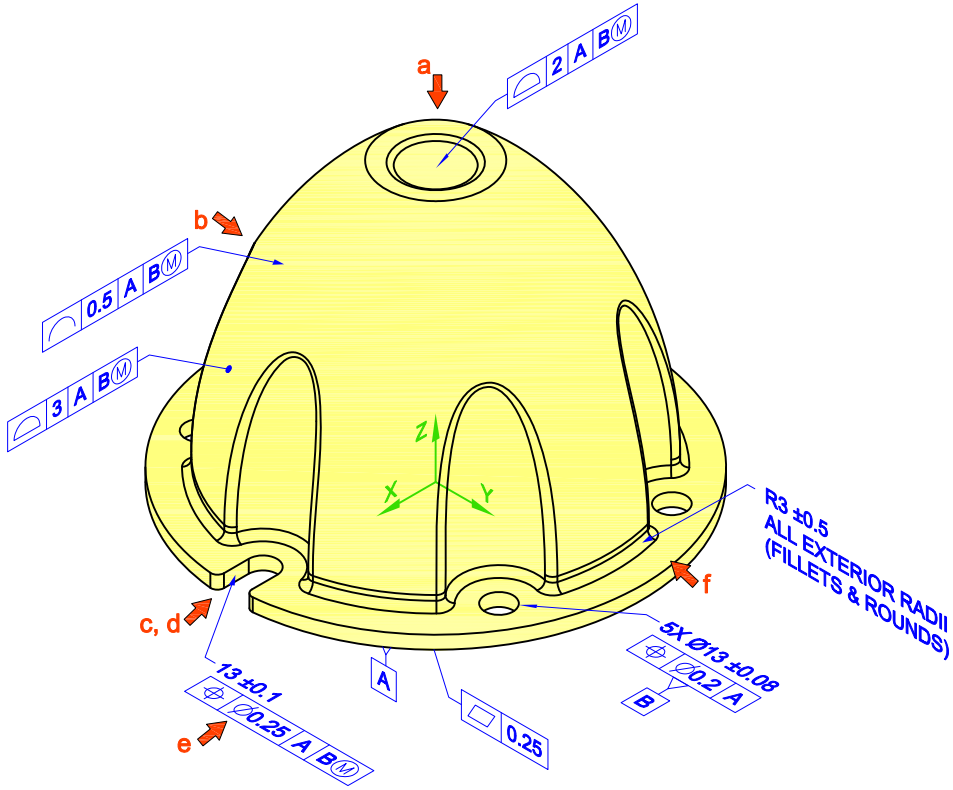

Figure 4-1

© Copyright Advanced Dimensional Management LLC – 2010 – All Rights Reserved

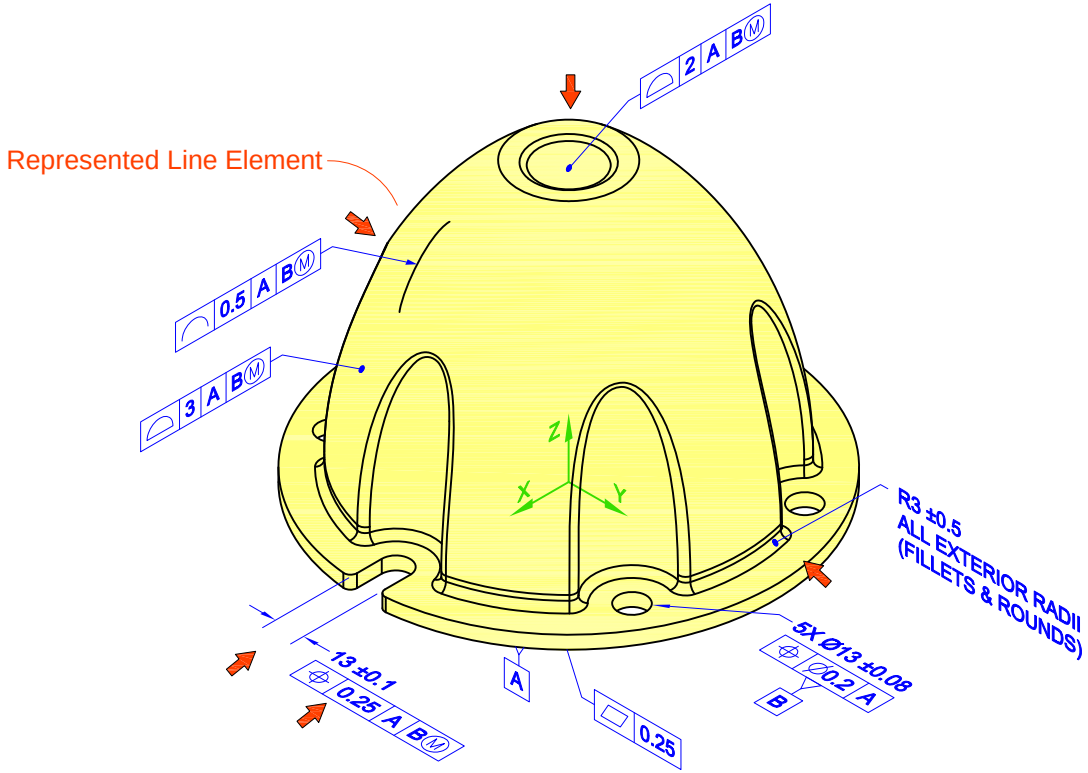

Specifications are acceptable
and per applicable standards

Figure 4-2

© Copyright Advanced Dimensional Management LLC – 2010 – All Rights Reserved

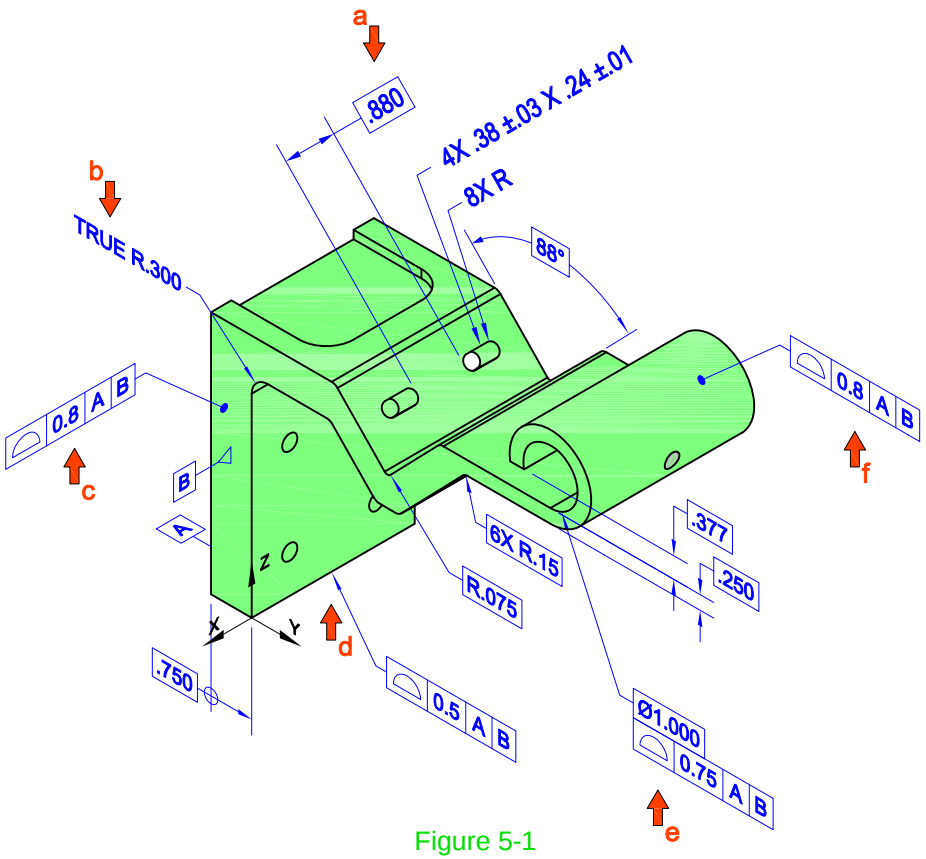

Figure 5-1

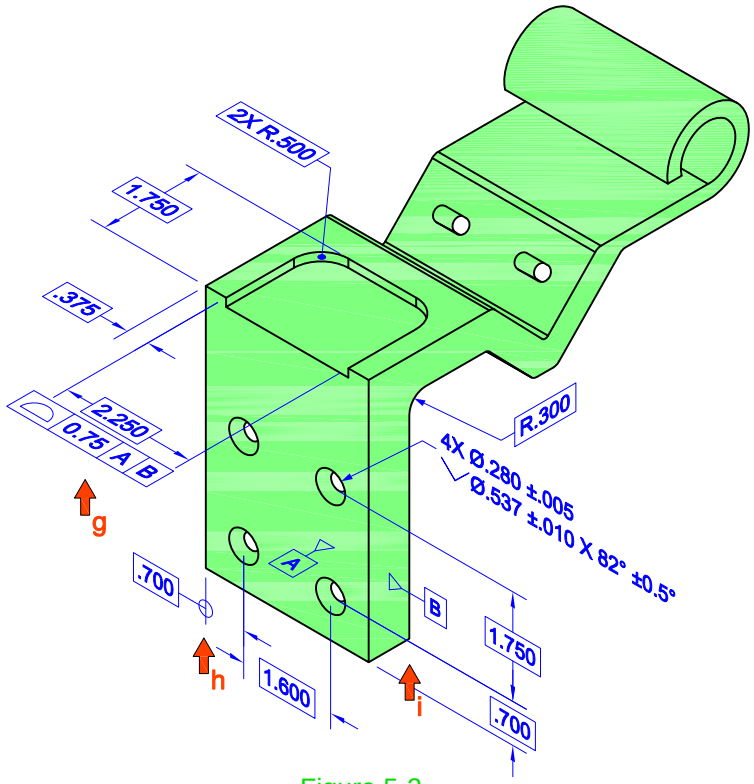

Figure 5-2

a. Dimension and Terminus Error - Dimension to/from edge of hole of tangent to radius (violation of best practice?)

b. Disallowed KEYWORD Error - the keyword "TRUE" is prohibited on annotated models

c. Self-Referential Datum Feature Reference Error - Datum feature is toleranced relative to the datum derived from the datum feature

d. Attachment Error - Leader directed to edge rather than surface - unclear which surface is controlled

e. Attachment Error - Profile tolerance attached to basic dimension

f. Tolerance Extents Error - the extents the tolerance applies are unclear [may be clarified by query and cross-highlighting]

g. Attachment Error - Profile tolerance attached to basic dimension

h. Dimension Origin Error - Dimension origin symbol applied to basic dimension

i. Model Coordinate System Error - Model Coordinate System Missing from Saved View

© Copyright Advanced Dimensional Management LLC – 2010 – All Rights Reserved

Dimensioning and Tolerancing per ASME Y14.5M-2009

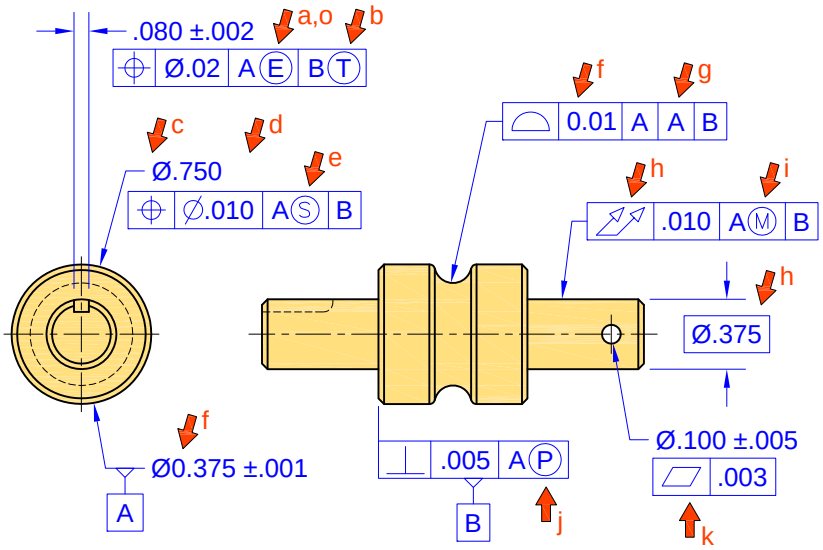

Figure 6-1

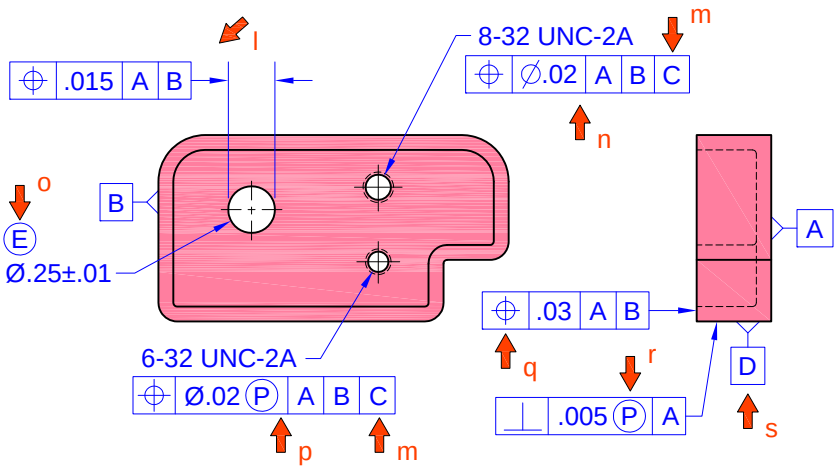

Figure 6-2

a. Inapplicable modifier for Datum Feature reference - unequally-disposed, independency, envelope (ISO)

b. Unnecessary modifier for Datum Feature reference - tangent plane

c. Quantity Error - “X places” not specified where needed

d. Untoleranced feature / missing tolerances

e. Unnecessary modifier for Datum Feature reference - RFS

f. Incorrect format - leading and trailing zero usage - Incorrect number of decimal places (related to units)

g. Duplicate Datum Feature Reference – datum feature referenced twice in a feature control frame

h. Runout applied to also control size

i. Disallowed modifier for Datum Feature reference - MMC (MMB) or LMC (LMB) for concentricity or symmetry (1994 & 2009), circular runout and total runout (2009)

j. Projection modifier for Datum Feature reference - not defined

k. Flatness attached to a dimension without a center plane

l. Single direction-dependent positional tolerance for cylindrical feature

m. Unspecified Datum Feature – datum feature referenced in feature control frame is undefined

n. Projected tolerance zone not specified for a threaded hole

o. Symbols unique to ISO standards used in ASME-based datasets

p. Projected tolerance zone length not specified

q. ISO Tolerance application carried over into ASME-based dataset

r. Projected tolerance zone on non-projectable feature

s. Unreferenced Datum Feature – datum feature identified and labeled but not referenced in a feature control frame

PMI Errors - 6

© Copyright Advanced Dimensional Management LLC – 2010 – All Rights Reserved

Dimensioning and Tolerancing per ASME Y14.5M-2009

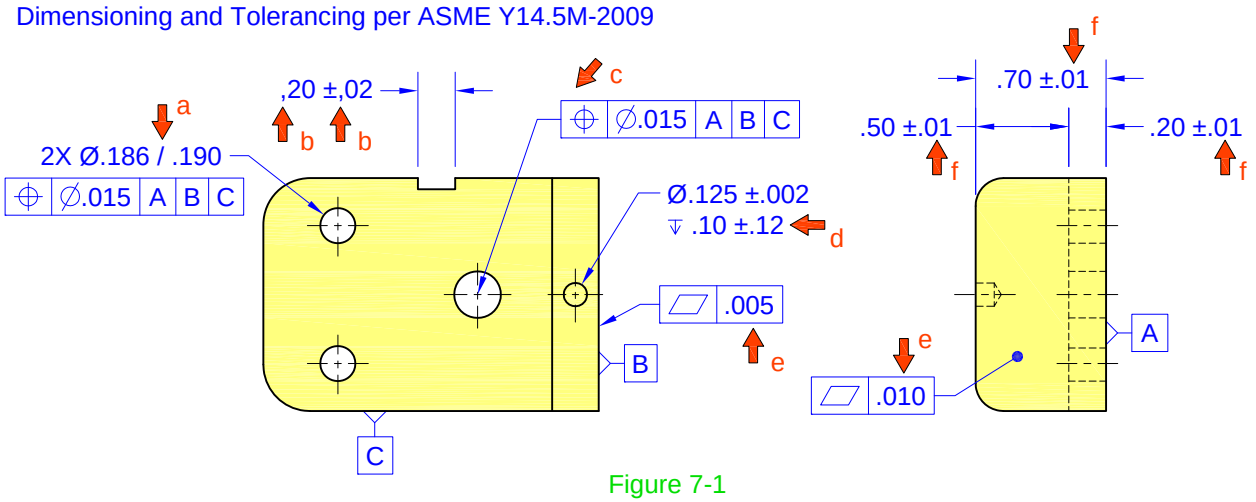

Figure 7-1

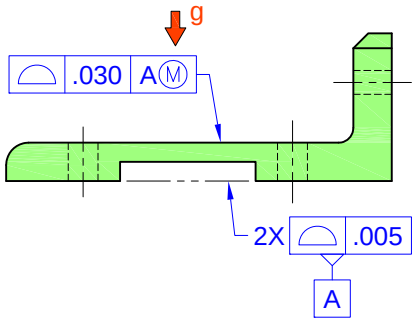

Figure 7-2

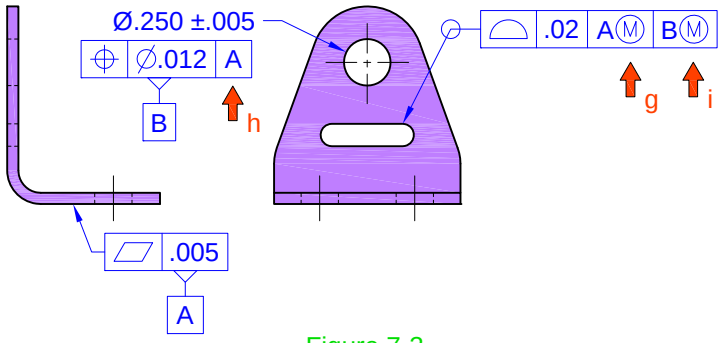

Figure 7-3

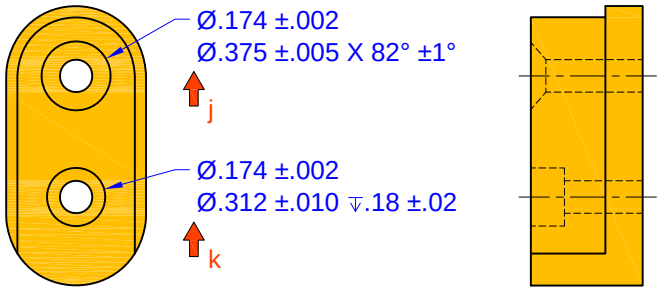

Figure 7-4

a. Incorrect format - Incorrect delimiter for limit dimensions (should be a dash)

b. Incorrect format - Incorrect delimiters (related to unit system, ISO vs. ASME)

c. Missing size dimension and tolerance for feature of size

d. Tolerance Magnitude - Depth tolerance value larger than depth dimension

e. Double Tolerancing Errors (conflicting redundant tolerances)

f. Tolerance Stackup error – accumulation of multiple tolerances conflicts with single tolerance value

g. Material Boundary Modifier Error (ASME Y4.5-2009) - This primary datum feature does not have Least Material and Maximum Material Boundaries

h. This is not an error - This is the correct method for referencing this primary datum feature because it does not have Least Material and Maximum Material Boundaries

i. This is not an error - This is the correct method for referencing this primary datum feature because it has Least Material and Maximum Material Boundaries

j. Missing Countersink Symbol Error - The symbol is required because the feature definition is specified as part of a directly toleranced dimension set

k. Missing Counterbore Symbol Error - The symbol is required because the feature definition is specified as part of a directly toleranced dimension set

© Copyright Advanced Dimensional Management LLC – 2010 – All Rights Reserved

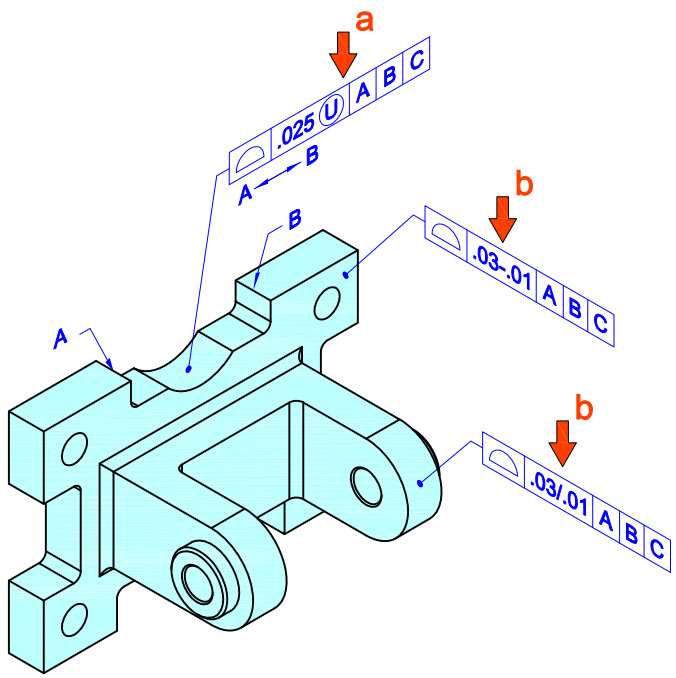

Figure 8-1

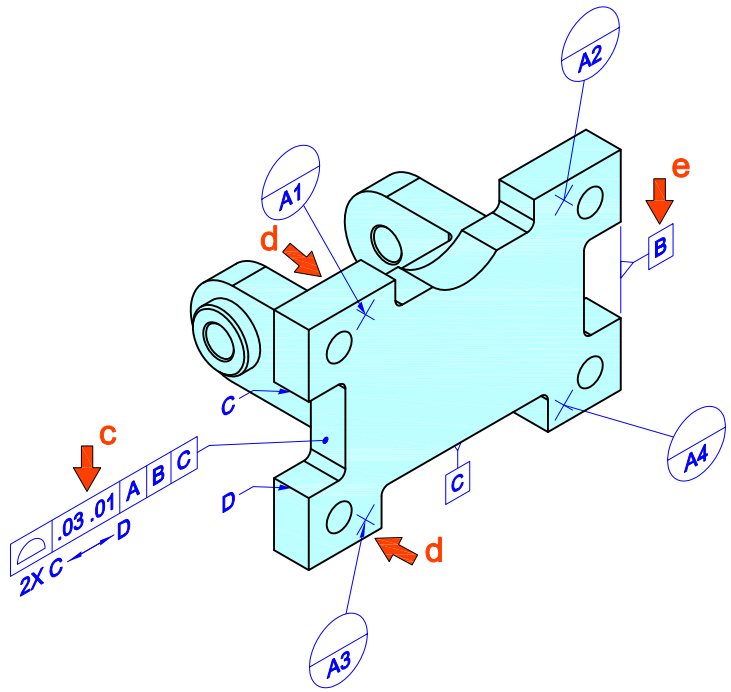

Figure 8-2

a. Missing Unequally-Disposed Profile MMB Value Error - Value offset toward MMB not specified after modifier

b. Improper Unequally-Disposed Modifier Error: Different symbol or delimiter used to indicate unequal-bilateral and unilateral profile tolerances

c. Missing Unequally-Disposed Modifier Error: Modifier not specified with unequal-bilateral and unilateral profile tolerances

d. Datum Target Leader Terminator Error - no terminator required for Datum Target leaders

e. Datum Feature Attachment Error - Datum feature attached to a single extension line from a feature outline

© Copyright Advanced Dimensional Management LLC – 2010 – All Rights Reserved

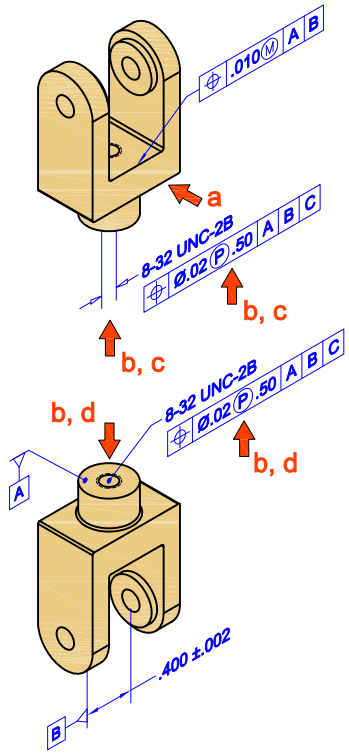

Figure 9-1

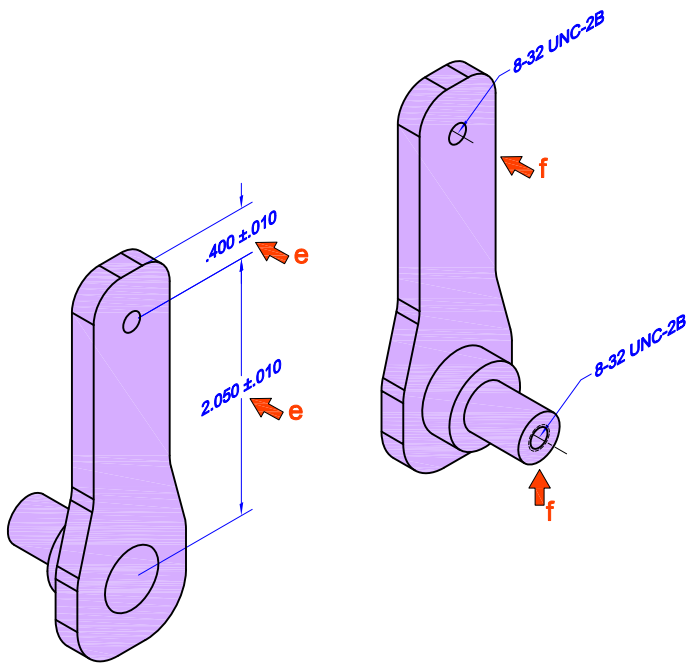

Figure 9-2

a. Leader directed to center plane rather than surface of width (stepped)

b. Projected tolerance zone on threaded through hole without projection direction indication

c. Projected Tolerance Zone Attachment Error - Projected tolerance directed to the feature using a method besides leader directed tolerance

d. Projected Tolerance Zone Attachment Error - Projected tolerance specification not attached to end of feature

e. Dimension Application Error – Directly Toleranced Dimension used to define the orientation and/or location between features

f. Leader directed to center line (axis) rather than surface of hole or pin (stepped)

© Copyright Advanced Dimensional Management LLC – 2010 – All Rights Reserved

PMI Quality Validation

Item	Description	Figure / Item	Fig Needed?	Rep	Pres	2D / 3D / Both	Testable?	Ambiguity	Associativity	Attachment	Best Practice	Confusing	Definition	Display	Extraneous	Format	Incomplete	Magnitude	Misapplication	Quantity	Redundancy	Std Version	Type Error	Undefined in stds	Notes
1	Leader directed orientation w/o dia sym for cylindrical feature	PMI Errors 3 / p	y				y	x		x			x				x		x				x	x	
2	Leader directed position w/o dia sym for cylindrical feature	PMI Errors 2 / 3	y				y	x		x			x				x		x				x	x	
3	Leader directed position w/o spherical dia sym for spherical	PMI Errors 2 / 4	y				y	x		x			x				x		x				x	x	
4	Disallowed leader line type (hidden)	PMI Errors 3 / a	y				y	x				x	x			x			x					x	
5	Inappropriate leader line type (center, phantom, dotted, etc.)	PMI Errors 3 / h	y				y	x				x	x			x			x					x	
6	Single direction-dependent positional tolerance for cylindrical feature	PMI Errors 6 / l (ell)	y				y	x			x						x		x				x	x	
7	Perpendicularity applied where angularity should be applied	PMI Errors 2 / g	y				m					x	x						x				x		
8	Projected tolerance zone not specified for a threaded hole	PMI Errors 6 / n	y				y	x			x								x						
9	Projected tolerance zone on threaded through hole without projection direction indication	PMI Errors 9 / b	y				y	x		x		x	x	x			x		x						
10	Projected tolerance zone length not specified	PMI Errors 6 / p	y				y	x				x					x	x	x						
11	Lack of association to digital elements		n				y	x	x	x		x	x		x		x								Logical problem, only visible during query as cross-highlighting error
12	Edited text within a PMI string		n				m				x														Indicated differently within different CAD systems.
13	PMI associated to the wrong digital elements		n				m		x	x		x		x					x						Logical problem, only visible during query as cross-highlighting error
14	Violation of Associativity rules in ASME Y14.41-2003		n				y	x	x			x													Logical problem
15	Violation of Associativity best practices		n				y	x	x		x	x													Logical problem
16	Directly toleranced dimension not associated to toleranced feature(s)		n				y		x	x		x			x										Logical problem, only visible during query as cross-highlighting error
17	Geometric tolerance not associated to toleranced feature(s)		n				y		x	x		x			x										Logical problem, only visible during query as cross-highlighting error
18	Set (pattern) of features controlled by an explicitly-specified geometric tolerance not associated (as a group)		n				y		x			x													Logical problem, only visible during query as cross-highlighting error

© Advanced Dimensional Management LLC – All Rights Reserved – Unrestricted rights granted to NIST, BAE, ITI TranscenData

PMI Quality Validation

Item	Description	Figure / Item	Fig Needed?	Rep	Pres	2D / 3D / Both	Testable?	Ambiguity	Associativity	Attachment	Best Practice	Confusing	Definition	Display	Extraneous	Format	Incomplete	Magnitude	Misapplication	Quantity	Redundancy	Std Version	Type Error	Undefined in stds	Notes
19	Violation of Attachment rules in ASME Y14.41-2003, ISO 16792:2006, and/or MIL-STD-31000	PMI Errors 4 / a,f	y				y	x		x		x													
20	Violation of Attachment best practices	PMI Errors 4 / a,c,f PMI Error 5 / d,e	y				y	x		x	x	x													
21	Flatness attached to a dimension without a center plane	PMI Errors 6 / k	y				m			x		x							x				x	x	
22	Leader directed to edge rather than surface	PMI Error 5 / d	y				y	x		x	x	x													
23	Leader directed to center line (axis) rather than surface of hole or pin (stepped)	PMI Errors 9 / f	y				y	x		x	x	x							x					x	
24	Leader directed to center plane rather than surface of width (stepped)	PMI Errors 9 / a	y				y	x		x	x	x							x					x	
25	Feature of Size Dimension Attachment Error - Dimension attached to/directed to a Feature of Size incorrectly	PMI Errors 4 / c	y				y	x		x	x	x							x					x	
26	Geometric tolerance associated with/attached to basic dimension	PMI Errors 5 / d,g	y				y	x	x	x	x	x							x				x	x	
27	Projected Tolerance Zone Attachment Error - Projected tolerance specification not attached to end of feature	PMI Errors 9 / d	y				y	x		x	x	x							x					x	
28	Projected Tolerance Zone Attachment Error - Projected tolerance directed to the feature using a method besides leader directed tolerance	PMI Errors 9 / c	y				y	x		x	x	x	x						x				x	x	
29	Inappropriate Letters Used to Specify Datum Features	PMI Errors 3 / k	y				y						x						x					x	
30	Inappropriate Letters Used to Reference Datum Features	PMI Errors 3 / l (ell)	y				y						x						x					x	
31	Inappropriately Labeled Datum Targets	PMI Errors 3 / c,e	y				y	x			x	x	x	x		x	x								
32	Wrong Datum Feature symbol used (1982 symbol used in a 1994, 2009 dataset)	PMI Errors 3 / o	y				y					x	x						x			x			
33	Incomplete Datum Feature symbol used: 1994, 2009 symbol - missing line, triangle, box, or letter	PMI Errors 3 / n	y				y					x	x	x		x								x	

© Advanced Dimensional Management LLC – All Rights Reserved – Unrestricted rights granted to NIST, BAE, ITI TranscenData

PMI Quality Validation

Item	Description	Figure / Item	Fig Needed?	Rep	Pres	2D / 3D / Both	Testable?	Ambiguity	Associativity	Attachment	Best Practice	Confusing	Definition	Display	Extraneous	Format	Incomplete	Magnitude	Misapplication	Quantity	Redundancy	Std Version	Type Error	Undefined in stds	Notes
34	Incomplete Datum Target symbol content - missing target number	PMI Errors 3 / e	y				y					x	x	x		x								x	
35	Incorrect Datum Target symbol content format - Datum target letter and number in wrong compartment	PMI Errors 3 / c	y				y					x	x	x		x								x	
36	Unspecified Datum Feature – datum feature referenced in feature control frame is undefined	PMI Errors 2 / l (ell) PMI Errors 6 / m	y				y	x				x					x								
37	Unreferenced Datum Feature – datum feature identified and labeled but not referenced in a feature control frame	PMI Errors 6 / s	y				y	x	x			x			x										
38	Duplicate Datum Feature Reference – datum feature referenced twice in a feature control frame	PMI Errors 6 / g	y				y					x			x				x					x	
39	Unauthorized Datum Feature Reference – datum feature(s) referenced in a form tolerance feature control frame (not allowed)	PMI Errors 2 / a	y				y					x	x						x				x	x	
40	Missing Datum Feature Reference – required datum feature(s) are not referenced in a feature control frame	PMI Errors 2 / e	y				y					x					x								
41	Insufficient datum features referenced – inadequate degrees of freedom constrained	PMI Errors 3 / g	y				m					x					x								
42	Wrong type of datum feature referenced	PMI Errors 3 / f	y				m					x							x				x		
43	Self-Referential Datum Feature Reference – tolerance applied to a datum feature that references that feature's datum	PMI Errors 2 / d PMI Errors 5 / c	y				y				x	x	x						x					x	
44	Projection modifier for Datum Feature reference - not defined	PMI Errors 6 / j	y				y					x	x						x				x	x	
45	Unnecessary modifier for Datum Feature reference - RFS	PMI Errors 6 / e	y				y					x			x				x			x			
46	Unnecessary modifier for Datum Feature reference - tangent plane	PMI Errors 6 / b	y				y					x							x				x		
47	Inapplicable modifier for Datum Feature reference - unequally-disposed, independency, envelope (ISO)	PMI Errors 6 / a	y				y	x				x							x				x	x	

© Advanced Dimensional Management LLC – All Rights Reserved – Unrestricted rights granted to NIST, BAE, ITI TranscenData

PMI Quality Validation

Item	Description	Figure / Item	Fig Needed?	Rep	Pres	2D / 3D / Both	Testable?	Ambiguity	Associativity	Attachment	Best Practice	Confusing	Definition	Display	Extraneous	Format	Incomplete	Magnitude	Misapplication	Quantity	Redundancy	Std Version	Type Error	Undefined in stds	Notes
48	Disallowed modifier for Datum Feature reference - MMC (MMB) or LMC (LMB) for concentricity or symmetry (1994 & 2009), circular runout and total runout (2009)	PMI Errors 6 / i	y				y	x				x	x						x				x		
49	Inappropriate modifier for Datum Feature reference - violation of best practice MMC or LMC for circular runout and total runout (1994)		n				y	x				x	x						x				x		Similar to disallowed MMC/MMB, LMC/LMB modifier reference for concentricity or symmetry, etc.
50	Datum reference frame not associated to a Model Coordinate System		n				y	x	x			x													Logical problem, only visible during query as cross-highlighting error
51	Datum reference frame not associated to a unique model coordinate system		n				y	x	x		x	x													Logical problem, only visible during query as cross-highlighting error
52	Movable datum target symbol used on model that references ASME Y14.5M-1994 but not ASME Y14.8	PMI Errors 3 / d	y				y					x	x									x		x	
53	Inappropriate origin or terminus of a dimension - Dimension to or from the edge of a cylindrical feature (hole or shaft)	PMI Errors 1 / n	y				y	x		x	x	x	x						x					x	
54	Inappropriate origin or terminus of a dimension - Dimension to or from the edge of a spherical feature of size	PMI Errors 1 / o	y				y	x		x	x	x	x						x					x	
55	Inappropriate origin or terminus of a dimension - Dimension to or from the edge of a countersink or conical surface		n				y	x		x	x	x	x						x					x	Similar to other dimension origin and terminus errors
56	Inappropriate origin or terminus of a dimension - Dimension to or from the edge of the tangent point of a radius	PMI Errors 5 / a	y				y	x		x	x	x	x						x					x	
57	Dimension origin symbol used with a basic dimension	PMI Errors 5 / h	y				y									x			x					x	
58	Security marking display violation per ASME Y14.41		n				y							x											Security Marking is not on correct annotation plane and/or does not display properly
59	Security marking display violation per MIL-STD-31000		n				y							x											Security Marking is not on correct annotation plane and/or does not display properly
60	Annotation scrambled		n	x	x		y	m				x		x											Obvious - no figure needed

© Advanced Dimensional Management LLC – All Rights Reserved – Unrestricted rights granted to NIST, BAE, ITI TranscenData

PMI Quality Validation

Item	Description	Figure / Item	Fig Needed?	Rep	Pres	2D / 3D / Both	Testable?	Ambiguity	Associativity	Attachment	Best Practice	Confusing	Definition	Display	Extraneous	Format	Incomplete	Magnitude	Misapplication	Quantity	Redundancy	Std Version	Type Error	Undefined in stds	Notes
61	Reading direction violation - Upside Down		n				y	x				x		x											Obvious - no figure needed
62	Reading direction violation - Backward		n				y	x				x		x											Obvious - no figure needed
63	Annotation obscured by model in saved view		n				m	x				x		x											Obvious - no figure needed
64	Annotation obscured by other annotation in saved view		n				m	x				x		x											Obvious - no figure needed
65	Annotation missing in saved view		n				m	x				x					x								Annotation that should be in saved view does not display in view
66	Annotation associated with wrong saved view		n				m	x	x			x		x			x								Annotation that should be in saved view displays in another view
67	Annotation on static annotation plane that should rotate with the model		n				m	x		x		x		x											Local annotation should be associated to and rotate with local geometry
68	Incorrect format - leading and trailing zero usage - Incorrect number of decimal places (related to units)	PMI Errors 6 / f	y				y					x				x									
69	Incorrect format - Incorrect delimiters (related to unit system, ISO vs. ASME)	PMI Errors 7 / b	y				y					x				x									Commas vs. periods
70	Tolerance Magnitude - Size tolerance value larger than size dimension	PMI Errors 1 / j	y				y				x	x						x	x						
71	Incorrect format - Incorrect delimiter for limit dimensions	PMI Errors 7 / a	y				y					x				x									slash versus dash…
72	Tolerance Magnitude - Depth tolerance value larger than depth dimension	PMI Errors 7 / d	y				y				x	x						x	x						Similar to other tolerance magnitude error
73	Virtual Condition calculation errors		n				m				x	x						x	x						These are design and dimensioning and tolerancing errors that could be calculated - probably too complex to do reliably because fastener and/or mating part information is needed
74	Untoleranced feature / missing tolerances	PMI Errors 1 / d PMI Errors 6 / d					m	x				x					x								
75	Feature without any specified tolerances		n				y	x				x					x								Obvious - no figure needed

© Advanced Dimensional Management LLC – All Rights Reserved – Unrestricted rights granted to NIST, BAE, ITI TranscenData

PMI Quality Validation

Item	Description	Figure / Item	Fig Needed?	Rep	Pres	2D / 3D / Both	Testable?	Ambiguity	Associativity	Attachment	Best Practice	Confusing	Definition	Display	Extraneous	Format	Incomplete	Magnitude	Misapplication	Quantity	Redundancy	Std Version	Type Error	Undefined in stds	Notes
76	Incompletely toleranced feature		n				m					x					x								Form, size, orientation, or location not toleranced as applicable
77	Missing size dimension and tolerance for feature of size	PMI Errors 7 / c					y					x					x								
78	Dimension value significantly different than model value		n				y					x	x					x							Likely from edited text - non-associative dimension value
79	Quantity Error - “X places” not specified where needed	PMI Errors 6 / c	y				m	y				x	x				x			x					
80	Quantity Error - “X places” does not correspond to applicable number of features	PMI Errors 1 / e,m	y				m					x								x					
81	Projected tolerance zone on non-projectable feature	PMI Errors 6 / r	y				y	x				x							x				x		
82	Redundancy - Multiple instances of same PMI associated to a feature	PMI Errors 3 / b	y				y				x	x									x				
83	Symbols used from the wrong version of ASME Y14.5 in dataset	PMI Errors 3 / o	y				y					x										x			
84	Symbols unique to ISO standards used in ASME-based datasets	PMI Errors 6 / o	y				y					x	x						x			x			
85	ISO Tolerance application carried over into ASME-based dataset	PMI Errors 6 / q	y				y					x	x			x			x			x			
86	Industry-specific symbols used without proper standard reference in TDP		n				m					x	x			x						x			Too varied to show in a figure
87	Company-specific symbols used without proper standard reference in TDP		n				m					x	x			x						x			Too varied to show in a figure
88	Double Tolerancing Errors (conflicting redundant tolerances)	PMI Errors 7 / e	y				m				x	x			x			x	x		x				
89	Tolerance Stackup error – accumulation of multiple tolerances conflicts with single tolerance value	PMI Errors 7 / f	y				m				x	x			x			x	x		x				
90	Missing R, CR, CSR symbol on radial feature dimension	PMI Errors 1 / b	y				y	x				x	x				x						x		
91	R, CR, SR, CSR, Ø, or SØ applied to inappropriate feature dimension	PMI Errors 1 / f, p	y				y	x				x	x				x						x		
92	Missing Ø symbol on round feature dimension	PMI Errors 1 / 1, i	y				y	x				x	x				x						x		
93	Missing SØ symbol on spherical feature dimension	PMI Errors 1 / c, h	y				y	x				x	x				x						x		

© Advanced Dimensional Management LLC – All Rights Reserved – Unrestricted rights granted to NIST, BAE, ITI TranscenData

PMI Quality Validation

Item	Description	Figure / Item	Fig Needed?	Rep	Pres	2D / 3D / Both	Testable?	Ambiguity	Associativity	Attachment	Best Practice	Confusing	Definition	Display	Extraneous	Format	Incomplete	Magnitude	Misapplication	Quantity	Redundancy	Std Version	Type Error	Undefined in stds	Notes
94	Inappropriate shape symbol – Countersink, counterbore, depth, etc. symbols used where they shouldn't be used or applied to wrong feature types	PMI Errors 1 / l (ell)	y				y	x				x	x						x				x		
95	Missing Countersink, counterbore, depth etc. symbols where they are needed	PMI Errors 7 / j,k	y				y	x				x					x								
96	Directly-toleranced dimension used where a basic dimension should be used – to locate or orient features (ASME Y14.41 and best practice)	PMI Errors 1 / a,g PMI Errors 3 / i	y				m	x			x	x	x						x				x		
97	Basic dimension frame drawn around directly toleranced dimension	PMI Errors 1 / k	y				y	x				x	x			x			x				x		
98	Inappropriate application – geometric tolerance applied to wrong feature type	PMI Errors 2 / b,c,g	y				m	x				x	x						x				x		
99	Runout applied to also control size	PMI Errors 6 / h	y				m	x				x	x				x						x		Size tolerance for sphere unspecified
100	Form/(size) controlling profile applied to surface defined using directly toleranced dimension		n				y	x			x	x	x						x				x		Similar to Form/(size)/ orientation/location error example
101	Form/(size)/orientation controlling profile applied to surface defined using +/- and oriented using directly toleranced dimension		n				y	x			x	x	x						x				x		Similar to Form/(size)/ orientation/location error example
102	Form/(size)/orientation/location controlling profile applied to surface defined using +/- and oriented/located using directly toleranced dimension	PMI Errors 3 / j	y				y	x			x	x	x						x				x		
103	Concentricity used inappropriately		n				n	x			x	x							x				x		Generally concentricity and symmetry should not be used in datasets per ASME Y14.5 (tolerance controls the wrong geometry)
104	Symmetry used inappropriately		n				n	x			x	x							x				x		Generally concentricity and symmetry should not be used in datasets per ASME Y14.5 (tolerance controls the wrong geometry)
105	Geometric Tolerance Zone Shape Errors - Inapplicable Symbol	PMI Errors 2 / 2,h PMI Errors 4 / e	y				y	x				x							x				x	x	

© Advanced Dimensional Management LLC – All Rights Reserved – Unrestricted rights granted to NIST, BAE, ITI TranscenData

PMI Quality Validation

Item	Description	Figure / Item	Fig Needed?	Rep	Pres	2D / 3D / Both	Testable?	Ambiguity	Associativity	Attachment	Best Practice	Confusing	Definition	Display	Extraneous	Format	Incomplete	Magnitude	Misapplication	Quantity	Redundancy	Std Version	Type Error	Undefined in stds	Notes
106	Geometric Tolerance Zone Shape Errors - Disallowed Symbol	PMI Errors 2 / 1	y				y	x				x							x				x	x	
107	Geometric Tolerance Zone Shape Errors - Missing Symbol	PMI Errors 2 / 3,4,5	y				m	x				x							x				x	x	
108	Material Condition Modifier Error: Material Condition Modifier applied to a feature without size.	PMI Errors 2 / f	y				y	x				x	x						x				x	x	
109	Material Boundary Modifier Error (ASME Y4.5-2009)	PMI Errors 7 / g	y				y	x				x	x						x				x	x	Only applies to references to flat primary Datum Features that are not toleranced to other features (Datum Feature A on many drawings/models)
110	Tolerance shown in saved view for geometry not shown in view		n				m	x				x		x											Logical problem
111	Tolerance shown in section view for geometry not shown in view		n				m	x				x		x											Logical problem
112	Arrowhead / Terminus Error - Leader Line	PMI Errors 4 / a,d,f	y																						
113	Direction Dependent Tolerance Errors - missing supplemental geometry indicating direction	PMI Errors 4 / b	y				y	x	x	x		x					x								
114	Direction Dependent Tolerance Errors - not associated to a model coordinate system vector indicating direction	PMI Errors 4 / b	y				y	x	x			x					x								
115	Disallowed KEYWORD Error - TRUE	PMI Errors 5 / b	y																						
116	Tolerance Extents Error - the extents the tolerance applies are unclear	PMI Errors 5 / f	y																						
117	Model Coordinate System Error - Model Coordinate System Missing from Saved View	PMI Errors 5 / i	y																						
118	Datum Target Leader Terminator Error - no terminator required for Datum Target leaders	PMI Errors 8 / d	y				y				x					x							x		
119	Dimension Application Error – Directly Toleranced Dimension used to define the orientation and/or location between features	PMI Errors 1 / a,j,o PMI Errors 9 / e	y				m	x			x	x							x				x		
120	Datum Feature Symbol Attachment Error - Symbol attached to a single extension line from a feature outline	PMI Errors 8 / e	y				y	x		x	x	x							x						

© Advanced Dimensional Management LLC – All Rights Reserved – Unrestricted rights granted to NIST, BAE, ITI TranscenData

PMI Quality Validation

Item	Description	Figure / Item	Fig Needed?	Rep	Pres	2D / 3D / Both	Testable?	Ambiguity	Associativity	Attachment	Best Practice	Confusing	Definition	Display	Extraneous	Format	Incomplete	Magnitude	Misapplication	Quantity	Redundancy	Std Version	Type Error	Undefined in stds	Notes
121	Datum Feature Symbol Attachment Error - Symbol attached to a corner or edge	PMI Errors 3 / m	y				y	x		x	x	x							x						
122	Missing Unequally-Disposed Modifier Error: Modifier not specified with Unequal-bilateral and unilateral profile tolerances	PMI Errors 8 / c	y				m	x				x					x		x						
123	Improper Unequally-Disposed Modifier Error: Different symbol or delimiter used to indicate unequal-bilateral and unilateral profile tolerances	PMI Errors 8 / b	y				m	x				x					x		x						
124	Missing Unequally-Disposed Profile MMB Value Error - Value offset toward MMB not specified after modifier	PMI Errors 8 / a	y				y	x				x					x		x						

© Advanced Dimensional Management LLC – All Rights Reserved – Unrestricted rights granted to NIST, BAE, ITI TranscenData

2010-07-26　大高

PDQ-D 資料

‘PMI Quality Validation’ 検討

＜凡例＞

Ａ：形態の表現に関する要求

Ｂ：**GD&T** 情報の表現に関する要求

Ｃ：形態と **GD&T** 情報の関係の表現に関する要求

<PMI Errors-1>

1. Error: 円筒 **feature** と **featuring** されていることを前提とすると触って意味あるのは直径であり、直径記号が抜けている。

A: 円筒あるいは穴などの性格付け**(featuring)**がされていること

B: 寸法要素がまとまっていること。直径記号の追加

C: 引き出し線や寸法補助線が円筒あるいは穴と関係付けられていること

a. Error: 円筒 **feature** と思しき図形の中心補助線を直接長さ寸法標記に使って結果的に **feature** の位置・姿勢を定義している。

A: 円筒あるいは穴などの性格付け**(featuring)**がされていること

B: 寸法要素がまとまっていること

C: -

b. Error: Radius feature をさしているにもかかわらず**, R or CR** が付いていない。

A: Radius featuring されていること

B: 寸法要素がまとまっていること。

C:引き出し線が **radius feature** と関係付けられていること

c. Error: 球面 **feature** と **featuring** されていることを前提とすると触って意味あるのは直径である。球面の直径記号ＳΦが抜けている。

A,B,C: See those of 1

d. 公差記述漏れ

A,B,C: See those of 1

e　同じ **feature** の複数存在を示す **3X** もれ。

A,B,C: See those of 1

f　幅 **feature** に対して直径を書いている誤り

A,B,C: See those of 1

g See a

h See c

i See 1.

j 公差値が寸法値より大。

k Frame の使用不正。

l Counterbore 使用不正。

m ‘nX’の量不正。

n 寸法計測不正（円筒 **feature** の **edge** から距離計測）

o 寸法計測不正（球面に接する **edge** から距離計測）

p 記号の誤り。

＜評価＞

1. ３次元形状が **feature** の集まりで表現され、寸法要素は対象 **feature** に確実に関係付けられていることが前提。これで３次元 **modelling** の実態に合っているか？

<PMI Errors – 7>

a delimiter 不正（/ でなく -）

A: 円筒あるいは穴などの性格付け**(featuring)**がされていること

B: 寸法要素がまとまっていること

C: 引き出し線や寸法補助線が円筒あるいは穴と関係付けられていること

b delimiter 不正（, でなく、.）

A, B, C: See a

c 円筒 **feature** のサイズ、公差がついていない。従って位置公差と一体の意味欠落。

A, B, C: See a

d 円筒 **feature** の深さ公差値が深さ値を超えていて不正。

A, B, C: See a

e 同一面の **flatness tolerance** を２箇所で別の値で定義している。

A, B, C: See a

f 関連公差の重ねた結果が全体寸法、公差**(.70 +-.o1)**と合わない。

g, h, i: Material boundary 関連不整合（純粋な寸法／公差付けの問題）

j, k: Countersink を定義しているのだから、**countersink** 記号が必要。

<PMI Errors – 8)

a Value Offset 値が抜けている。

b Delimiter 不良。

c Modifier が抜けている。

d Datum target からの **terminator** 指定は不要。

e Datum feature の定義位置不良（**1 feature** の **outline** の延長線使用）。

＜全体評価＞

1. 対象モデルが全面 **featuring** されていることが前提

2. 寸法要素は対象 **feature** と性格に関連付けられていることが前提

3. 上記 **1, 2** を前提として、寸法要素そのものの問題を列挙している。

以上

“PMI Quality Validation” Error2 検討資料

2010/7/28 相馬

PMI Errors-2

2-1　位置交差の交差域が R で指定されている
2-2　円筒形状の位置交差の交差域が球で指定されている
2-3　位置交差の交差域がφ、Sφを伴わずに指定されている
2-4, 5　位置交差の交差域に Sφがない。
2-6-a　平面度が指定されている面のデータム平面が自分自身
　？（Orientation of parallel-plane tolerance zone unclear と Orientation of cylindrical tolerance zone unclear の意味？）
2-6-b　真円度交差が適用不可能なタイプの面に対して指定されている
2-6-c　平行度が、直角な面をデータムとして指定されている
2-6-d　自分自身をデータムとして平行度が指定されている
2-6-e　傾斜度交差がデータムフィーチャを参照していない
2-6-f　最大実体公差方式がサイズを伴わないフィーチャに対して指定されている（?）
2-6-g　直角度が垂直から大きく外れているデータムに対して適用されている
2-6-h　直角度の交差域に直径交差
2-6-i　データムフィーチャが図中に存在しない

PMI Errors まとめ

- “polyline representation”, “unicode symboles & text literal strings“, “full semantic“の 3 つのレベルの presentation の中では、“full semantic“にのみ適用される criteria
  - 単なるテキストエディタ的に幾何公差を入力することができるシステムは存在する。その場合に、基本的には” unicode symboles & text literal strings“として出力される可能性が高いが、この criteria を適用するには、それを解釈して”full semantic”の情報を構築する必要がある
- 幾何公差のタイプごとに、tolerance zone の交差の型、データムフィーチャとの関係についてのルールを書くことで measurement requirement は実現できる
- Full semantic の場合に、2-1、2-3～5 のような criteria がどの程度意味を持つかは STEP 規格を調査する必要あり。これらのエラーが不可能となるようにモデリングすることは可能なはず。
- 2-6-c, g では、形状要素の間の角度を測定し、それを或る閾値と比較してエラー判定することが必要となる

PMI Quality Validation Analysis; PMI Errors - 3

H. Hiraoka, 2010-7-28 PDQ-D

Error id	desctiption	error type	Shape	GD&T	presentation	measurement	assessment	comments
a	Disallowed Leader Line Error - Use of Hidden Line Leaders on Models (ASME Y14.41)	presentation			Leader	Investigate appearance of leader	Check if the leader has invalid appearance.	
b	Datum Target Specification Error - Duplicate Target Specification	GD&T or presentation		datum target	datum target	Count number of datam target with same name	Check if the number is plural.	
c	Datum Target Specification Error - Incorrect Datum Target Specification - Format error	presentation			datum target	Investigate presentation of datum target symbol	Check if it is invalid presentation.	
d	Standard Reference Error Error - Movable Datum Target Symbol used with ASME Y14.5M-1994 without referencing ASME Y14.8-1996 or late	presentation			datum target symbol	Investigate presentation of symbol	Check if it is invalid presentation.	I think multiple standards are not allowed for ISO.
e	Datum Target Specification Error - Invalid Specification - Missing Numeric Suffix	presentation			datum target	Investigate the name of datum target.	Check if the name is invalid.	
f	Datum Feature Reference Type Error - Wrong type of datum feature referenced (Runout requires a datum axis and cannot be parallel to a single datum center point)	GD&T or feature	shape feature	relation between datum feature and toleranced feature; circular run-		Investigate type of referenced datum feature for the specified geometric tolerance	Check if the type is invalid for the tolerance.	
g	Datum Feature Reference Type Error - Insufficient Degrees of Freedom constrained by referenced datum features	GD&T or feature	shape feature	relation between datum feature and toleranced		Investigate type of referenced datum feature for the specified geometric tolerance	Check if the type is invalid for the tolerance.	Do we need to distinguish Insufficient DOF case?
h	Inappropriate Leader Line Error - Center line, phantom line, etc. (Violation of best practice)	presentation			Leader	Investigate appearance of leader	Check if the leader has invalid appearance.	What is the difference between "a. disallowed" and "h. inappropriate"??
i	Type Error - Dimension - Basic dimension must be used where profile tolerance controls orientation and/or location of a surface	GD&T and presentation		profile of a surface	Dimension	Investigate type of dimension for datum feature to which a profile tolerance is	Check if basic dimension is not used for the dimension.	
j	Form/orientation/location controlling profile applied to surface oriented/located using directly toleranced dimension	GD&T and presentation		dimension applied to datum feature for profile of a surface	Dimension	Investigate dimension applied to the datum feature used for profile of a surface.	Check if the dimension has tolerance.	
k	Datum Feature Specification Error - Inappropriate Datum Feature Letter Specified	presentation			datum feature	Investigate the name of datum feature.	Check if invalid letter is used for the name.	
l	Datum Feature Reference Error - Inappropriate Datum Feature Letter Referenced	presentation			datum feature	Investigate the name of datum feature.	Check if invalid letter is used for the name.	
m	Datum Feature Symbol Error - Attachment Error - Ambiguous	GD&T and presentation	shape feature	datum feature	presentation of datum	Investigate presentation of datum feature	Check if the presentation is invalid.	
n	Datum Feature Symbol Error - Incomplete Datum Feature Symbol Used	presentation			presentation of datum	Investigate presentation of datum feature	Check if the presentation is invalid.	
o	Datum Feature Symbol Error - Wrong Datum Feature Symbol Used	presentation			presentaition of datum feature	Investigate the name of datum feature.	Check if invalid letter is used for the name.	
p	Orientation tolerance without diameter symbol to directed cylindrical feature with a leader	presentation		perpendicularity	presentation of perpendiculality for	Investigate what the leader of perpendicularity tolerance is directed to.	Check if the leader is not directed to diameter symbol.	

PMI Quality Validation: Error No.4 の検討
(Advanced Dimensional Management LLC -- 2010)

2010/07/27 富山県立大・小林一也

●抽出された問題点 (Errors)

a. Arrowhead / Terminus Error - Leader Line - Leader directed to surface within feature outline should terminate in a dot (ASME Y14.41) [Also Attachment Error]

   注記からフィーチャ表面を指す線は，終端が黒丸(dot)でなければならないが，矢印になっている.

b. Direction Dependent Tolerance Error - Missing supplemental geometry indicating direction tolerance applies

   測る方向に依存して定義される公差を示すのに，その方向を明示する補助線が記されていない.

c. Feature of Size Dimension Attachment Error - Size dimension and tolerance directed to/attached to only one surface of width feature of size

   幅を表わすフィーチャーは，二つの面の間の寸法・公差を示すはずなのに，一つの面しか指していない.

d. Application Error - Leader directed to surface within feature outline should terminate in a dot (ASME Y14.41)

   a.と同じ.（終点が黒丸でなくて矢印になっている）

e. Geometric Tolerance Zone Shape Errors - Inapplicable Symbol - Inappropriate diameter symbol specified for width feature dimension

   幅を表わすフィーチャーの寸法を示すのに，直径を表わす記号φを用いている.

f. Arrowhead / Terminus Error - Leader Line - Leader directed to surface within feature outline should terminate in a dot (ASME Y14.41) [Also Attachment Error]

   a.と同じ.（終点が黒丸でなくて矢印になっている）

●分類

(1) 注記そのものの図形表現の問題: a, d, f

(2) 注記内容の記法の問題: e

(3) 注記が参照するものとの参照関係・図形表現の問題: b, c

●検査の要件

(1) 注記が指す対象に合った図形表現が使われていること.

(2) 注記の内容に合った文字列表現が使われていること.

(3) 注記が指す対象の型（線・面）及び個数が，注記の内容と合っていること.

2010-07-27　田中　文基

		a. 形状（形体)そのものが満たすべき要件(ex. Featuring されていなければならない、	b. GD&T情報表現に関する要件	c.形体とGD&T情報の関係に関する要件	メモ
a	Dimension and Terminus Error – Dimension to/fromedge of hole of tangent to radius (violation	cylinder(hole) or circle	寸法	円筒形体に寸法線を指定する場合	規格に違反か不明
b	Disallowed KEYWORD Error – the keyword "TRUE"is prohibited on annotated				表示の問題？
c	Self-Referential Datum Feature Reference Error – Datum feature is toleranced relative to the datum derived from the datum		データムを用いる幾何公差	対象とする形体自身をデータムとしている場合	
d	Attachment Error – Leader directed to edge rather than surface – unclear which surface is controlled	線要素	面に対して指定すべき幾何公差		
e	Attachment Error – Profile tolerance attached to basic dimension		輪郭度公差	枠つき寸法に公差が付いている	表示の問題？
f	Tolerance Extents Error – the extents the tolerance applies are unclear [may be clarified by query and cross-	面	面に対して指定すべき幾何公差		
g	Attachment Error – Profile tolerance attached to basic dimension		輪郭度公差	枠つき寸法に公差が付いている	表示の問題？
h	Dimension Origin Error – Dimension origin symbol applied to basic dimension		起点記号，枠つき寸法		問題点が不明
i	Model Coordinate System Error – Model Coordinate System Missing from Saved View				表示の問題？

ASME Y14.5では理論的に正確な寸法のことを"Basic dimension"と呼ぶ

JISでは，枠つき寸法という

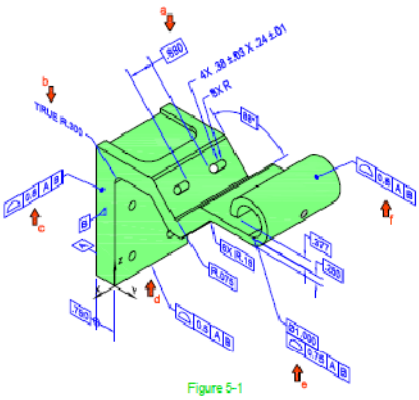

Figure 5-1

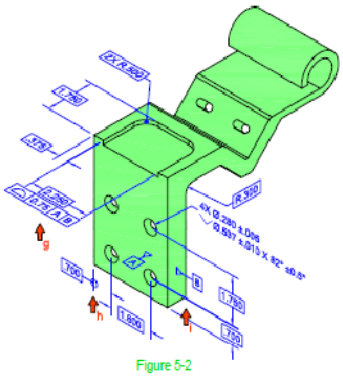

Figure 5-2

2010-07-26　菊地慶仁

PMI Errors-6 の整理

Error name	Description	記述	基準として参照されている要素	Error となっている要素	Error のタイプ	備考
PMI Errors-6-a	Inapplicable modifier for Datum Feature reference – unequally – disposed, independency, envelope (ISO)	データムフィーチャー参照の対象外の修飾子 – 不均等 - 独立配置、envelope（ISO）	Datum Feature	データムフィーチャー参照	参照先の Datum Feature に適用可能な修飾子の範囲に入っていない	
PMI Errors-6-b	Unnecessary modifier for Datum Feature reference – tangent plane	データムフィーチャー参照のために不要な修飾子 - 接平面	Datum Feature	データムフィーチャー参照	必要とされる修飾子の範囲にはいっていない	
PMI Errors-6-c	Quantity Error – “X places” not specified where needed	数量エラー - "X 箇所" が必要とされる場合に指定されていない		"X places" to be specified	指定されるべき個所が存在しない	
PMI Errors-6-d	Untoleranced feature / missing tolerances	公差が指定されていないフィーチャー / 公差が不明	Feature	Feature	指定されるべき公差 Feature が存在しない	
PMI Errors-6-e	Unnecessary modifier for Datum Feature reference – RFS	データムフィーチャー参照のために不要な修飾子 - RFS	Datum Feature	データムフィーチャー参照	Datum Feature 参照に適用可能な修飾子の範囲に入っていない	

PMI Errors-6-f	Incorrect format – leading and trailing zero usage – incorrect number of decimal places (related to units)	不適切な形式 – 先行しかつ後続するゼロ使用 - 小数点以下の桁（単位に関連）	参照先との食い違いかは不明	Format	推奨される形式に合致していない	
PMI Errors-6-g	Duplicate Datum Feature Reference – datum feature referenced twice in a feature control frame	データムフィーチャー参照の重複 - データムフィーチャーがフィーチャー制御フレームで 2 度参照	Datum Feature	データムフィーチャー参照	同一フレームから特定の Datum Feature 向けの参照数が 2 以上	
PMI Errors-6-h	Runout applied to also control size	制御サイズに振れが適用				
PMI Errors-6-i	Disallowed modifier for Datum Feature reference – MMC (MMB) or LMC (LMB) for concentricity or symmetry (1994 & 2009), circular runout and total runout (2009)	データムフィーチャー参照のために許可されていない修飾子 -同心または対称性のための MMC（MMB）または LMC（LMB）（1994＆2009）、円周振れ，全振れ（2009）	Datum Feature	Disallowed modifier for Datum Feature reference	許可されている修飾子の範囲に入っているか	
PMI Errors-6-j	Projection modifier for Datum Feature reference	データムフィーチャー参照のための投影修飾子	Datum Feature		どういうエラーか不明	

PMI Errors-6-k	Flatness attached to a dimension without a center plane	中心面なしでディメンションに添付された平面性	参照すべき center plane	Flatness	参照すべきディメンションの欠如	
PMI Errors-6-l	Single direction-dependent positional tolerance for cylindrical feature	円筒フィーチャーのための，単一の方向依存の位置公差				
PMI Errors-6-m	Unspecified Datum Feature – datum feature referenced in feature control frame is undefined	データムフィーチャーの未指定 - データムフィーチャーがフィーチャー制御フレーム内で参照されたが定義されていない	Datum Feature		定義されるべき Datum Feature	
PMI Errors-6-n	Projected tolerance zone not specified for threaded hole	ネジ穴に指定されていない投影公差ゾーン			Projected tolerance zone	
PMI Errors-6-o	Symbols unique to ISO standards used in ASME-base datasets	ASME 規格ベースのデータセットで使用される ISO 規格で一意のシンボル	ASME-base datasets	Symbols unique to ISO standards	Symbols unique to ISO standards	
PMI Errors-6-p	Projected tolerance zone length not specified	公差域の投影長さを指定しない	Projected tolerance	Projected tolerance zone length		

PMI Errors-6-q	ISO Tolerance application carried over into ASME-based dataset	ASME 規格ベースのデータセットに繰り返された ISO 公差アプリケーション	ASME-based dataset	ISO Tolerance application	ISO Tolerance application	
PMI Errors-6-r	Projected tolerance zone on non-projectable feature	非投影フィーチャー上の投影された公差	non-projectable feature	Projected tolerance	Projected tolerance	
PMI Errors-6-s	Unreferenced Datum Feature – datum feature identified and labeled but not referenced in a feature control frame	参照されないデータムフィーチャー - データムフィーチャーが識別されラベル付けされたが，フィーチャー制御フレーム内で参照されていない	Datum Feature	Datum Feature itself	Datum Feature itself	

【1】CAEメッシュのPDQ項目についてのコメント

【問い】Draft CAE mesh data quality criteriaの項目で、不足はないか？
➔ 特にはありません。
この他に、シェル要素の裏表チェックを実施してます。

【問い】 Draft CAE mesh data quality criteriaの項目で、不要なものはないか？
➔ 特にはありません。

●基本的にメッシュの評価は『Aspect ratio』を使用しております。
また、状況に応じて以下の項目もチェックしております。

①Aspect ratio	ﾒｯｼｭの縦横比
②Tiny Element	微小要素や、つぶれた要素のチェック
③Acute angle	要素内の最大・最小角度をチェック
④Warping element	四角形要素がねじれていないかをチェック
⑤free edge	要素のﾌﾘｰｴｯｼﾞ

【2】PDQ仕様書の運用案

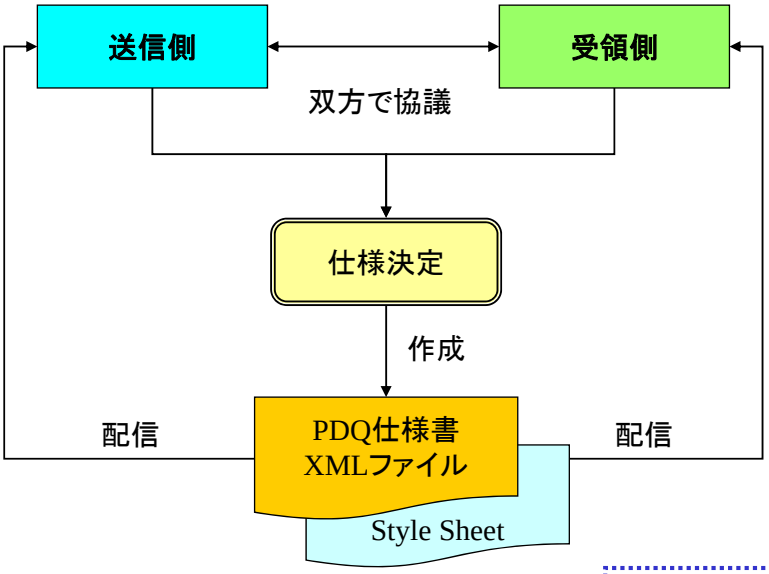

○PDQ仕様書はXMLフォーマットで作成

○ PDQ仕様書用のStyle Sheetを事前に
作成・配布または公開（各種言語対応）
（ENGDAT Packageに含んで送信しても可）

○ PDQ仕様書は、そのままCADもしくはチェッ
クツールに取り込みチェックが出来る構造

【3】Quality Stampの運用案（ENGDAT V3?での流通）

【出力例】

①PDQ仕様書に従ったチェックを実行

②チェック結果をQuality Stampに出力
（またはCADファイル内部に埋め込み）

③CADデータとQuality Stampを同じ
ENGDAT Packageに入れ送信
（ PDQ仕様書を含むことも可？）

【利用例】

○Quality Stamp Viewerまたは、Style Sheetで、データ品質を確認
（Viewer、Style Sheetは事前に入手
または、ENGDAT Packageで送信

○PDMシステムに自動取り込み

○Healing Toolに取り込み修正を実行

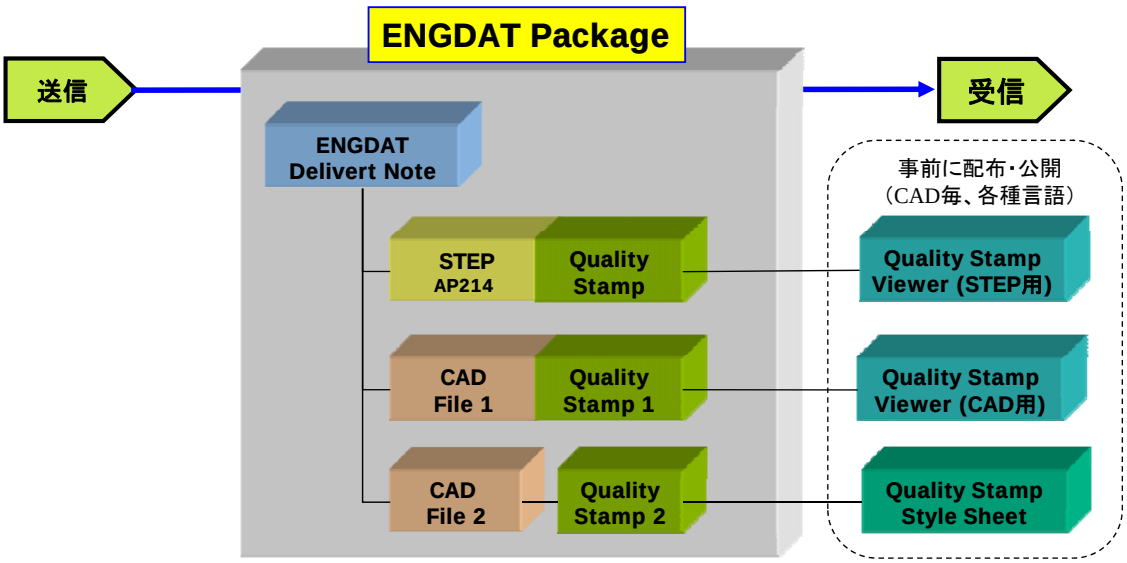

各OEM PDQ展開項目一覧

◎同一種類
同一尺度

○同一種類
異なる尺度

カテゴリー		JAMA/JAPIA PDQガイドライン V5.1		A	B	C	D	E		F	G	H	I	J	K		L	M	N
		項目名	項目ID	NX?	CATIA V?	NX?	?	CATIA V5	Pro/E	UG ?	CATIA V?	CATIA V?	CATIA V5	I-DEAS ?	CATIA V4	CATIA V5	CATIA V?	?	?
カテゴリー		JAMA/JAPIA PDQガイドライン V5.1		A	B	C	D	E		F	G	H	I	J	K		L	M	N
		項目名	項目ID	NX?	CATIA V?	NX?	?	CATIA V5	Pro/E	UG ?	CATIA V?	CATIA V?	CATIA V5	I-DEAS ?	CATIA V4	CATIA V5	CATIA V?	?	?
4.2.1.	CADモデル	会社ルールに反するCADバージョン	O-CM-CV	◎												◎	◎		¥
		会社ルールに反するCADスタートアップファイ	O-CM-SE														◎		
		会社ルールに反する基本精度設定	O-CM-AP									◎			○		◎		◎
		ハイブリッドモデル	O-CM-HY		○												◎		
		マルチソリッドモデル	O-CM-MU														◎		
		CADモデル名への特殊文字の使用	O-CM-SC			◎						◎			○	○	◎		◎
		会社ルールに反するアイテム名	O-CM-IN	◎	○	○									○	○	○		◎
		会社ルールに反する物理ファイル名	O-CM-PN		○										○	○	○		◎
		会社ルールに反する物理ファイルサイズ	O-CM-FS												○	◎			
		会社ルールに反するアイテム属性の設定	O-CM-IP			◎					○								
		アイテムデータ整合性の未確認	O-CM-IC			○									◎		◎		◎
		会社ルールに反するリファレンスセット	O-CM-RS	◎		◎													
		密封型エンティティ(Detail/Symbol等)の使用	O-CM-EE												◎				
		未使用密封型エンティティ(Detail/Symbol等)(	O-CM-UP									◎			◎	◎	◎		◎
		同一密封型エンティティ(Detail/Symbol等)の	O-CM-IE														◎		
		空の密封型エンティティ(Detail/Symbol等)の	O-CM-EP													◎	◎		
		外部アイテムの参照	O-CM-EI		○	◎													
		不整合なアイテム間の参照	O-CM-IR		○	◎										◎	◎		
		会社ルールに反する簡易表現	O-CM-SP			◎													
		モデリング領域外に存在する要素	O-CM-OB														○		
4.2.2.	グループ／レイヤ	グループ使用の有無	O-GL-GU																
		多数のグループ数	O-GL-NG																
		同一要素の複数グループへの登録	O-GL-IG																
		会社ルールに反するグループ	O-GL-IE	◎															
		会社ルールに反するグループ名	O-GL-GN	◎															
		レイヤ使用の有無	O-GL-LY			◎									◎				
		多数のレイヤ数	O-GL-NL																
		会社ルールに反するレイヤ	O-GL-LU	○		◎									◎				◎
		会社ルールに反するインスタンスのレイヤ設定	O-GL-WL																
		会社ルールに反するレイヤ名	O-GL-LN	◎		◎													
		レイヤグループ使用の有無	O-GL-GL	○		○									○				
		空のレイヤグループの存在	O-GL-EL																
		会社ルールに反するレイヤグループ	O-GL-LA	◎		◎									◎				◎
4.2.3.	座標系	局所座標系の有無	O-CS-LS																
		座標系選択の不整合	O-CS-NR	○											◎		◎		
		会社ルールに反する座標系の向き	O-CS-NO	○											◎	◎	◎		◎
		会社ルールに反する座標系名	O-CS-CN														○		
		会社ルールに反する単位系	O-CS-SU	○		◎									◎		◎		◎
		会社ルールに反するスケール設定	O-CS-SS												◎		◎		◎
		トランスフォーメーションの存在	O-CS-TS																
4.2.4.	アセンブリ	アセンブリ構造の有無	O-AR-AR	◎													◎		◎
		アセンブリ拘束条件の未定義	O-AR-UC																
4.2.5.	ソリッド	モデル履歴使用の有無	O-SO-HN	◎															◎
		モデル履歴のアップデートの未実施	O-SO-HU		○							◎			◎	◎	◎		◎
		モデル履歴が未定義	O-SO-MH																
		未使用のモデル履歴の存在	O-SO-UH																
4.2.6.	フォームフィーチャ	未解決(Unresolved)フォームフィーチャの使用	O-FE-UF												◎		◎		◎
		非活動(inactive)フォームフィーチャの使用	O-FE-IF														◎		
4.2.7.	要素	会社ルールに反する要素名	O-EL-EN												○	○	◎		
		未使用要素の存在	O-EL-UE									◎				◎	○		
		会社ルールに反する要素タイプ	O-EL-PE												◎	○			
		ユーザ定義要素の使用	O-EL-UD																

4.2.8.	表示	会社ルールに反する色設定	O-PR-CO														◎		
		会社ルールに反する要素色	O-PR-EC														◎		
		会社ルールに反する点種	O-PR-PT																
		会社ルールに反する線種	O-PR-LT																
		会社ルールに反する線幅	O-PR-LW																
		会社ルールに反する表示／非表示設定	O-PR-VE	○		○										◎	○		
		会社ルールに反するシェーディング表示モード	O-PR-DM			○													
		要素名の表示	O-PR-ED														◎		
		会社ルールに反する拡大表示	O-PR-SR																
4.2.9.	スケッチ	多数のスケッチ要素	O-SK-WD																
		スケッチ要素間の拘束条件の未定義	O-SK-NC														○		
カテゴリー		JAMA/JAPIA PDQガイドライン V5.1		A	B	C	D	E		F	G	H	I	J	K		L	M	N
		項目名	項目ID	NX?	CATIA V?	NX?	?	CATIA V5	Pro/E	UG ?	CATIA V?	CATIA V?	CATIA V5	I-DEAS ?	CATIA V4	CATIA V5	CATIA V?	?	?
5.2.1.	ドローイング	微小な図面要素	D-GE-TI	○															
		重複した図面要素	D-GE-EM														○		
		ISO非適合テキストの使用	D-OR-SC																
		不明なCAD参照元情報	D-OR-SN		○														
		外部データベース、ライブラリ参照の有無	D-OR-ER		○														
		2D図の有無	D-OR-XD												◎		○		
		2D図の未更新	D-OR-DU		○	◎										◎	○		
		2D，3D連携の有無	D-OR-DL																
		多数の図面シート数	D-OR-ND			◎									◎		◎		
		会社ルールに反するプロット範囲設定	D-OR-PF																
		図面フレーム領域の未定義	D-OR-VF																
		ブランクビューの存在	D-OR-EV												◎	◎	◎		
		会社ルールに反するビュー名	D-OR-VN													○			
		未使用座標系の存在	D-OR-CS													◎			
		フェイク寸法の使用	D-OR-FD														○		
		会社ルールに反する寸法表示精度	D-OR-DI														○		
		図面寸法の非連携	D-OR-AD														○		
		会社ルールに反するビュー依存オブジェクト	D-OR-VD																
		会社ルールに反する投影方法	D-OR-VP																

その他の項目		
OEM	CAD	項目名
スズキ	NX?	未更新または抑制されたフィーチャが無いか？
		図面サイズが適正か？(A0～A4、T5000)
日産	I-DEAS ?	曲線間の隙間(旧G-CG-LG)
三菱	CATIA V4	Current Workspace must be *MASTER
		Empty Set
		Only one Set in *MASTER Workspace
		Calculation of Shells/Volumes
	CATIA V5	Current Axis System
		Product/Part Document update
		Current Work Object is PartBody
		Sheet Name
		Detail-Sheet Name
		Detail-View Name
		Product Component Name
		Published Element Name
		Empty Sheets
		No active Background View
		No active Background Detail View
		Empty Detail Sheets
		View Update
		Model Drafting Standard Name
		Empty Sketch
		Element in Specific Feature Types in Specific Bodies
		Sketch Not Fully Constrained
		Elements without Child Elements in Specific Bodies
		Offset Capability (Thick Surface) of Thin Parts
		Calculation of Shells/Volumes[G-SH-xx]

新PDQ活動が、長期保存に統合された場合、PDQからの申し送り事項

2010-01-21 PDQタスク会議

小形さん、竹田さん、相馬さん、多賀

- PDQ-S（PDQガイドラインV5.1）の普及の前提としてPDQツール/CADへの実装が必要
  そのためには
  - ①JAMA内でV5を展開するという意思表示
  - ②PDQツールベンダへの実装要求
  - ③実装された機能がPDQ-Sに適合しているかのテストをベンダが自己チェックするとしても、検証用のデータが必要
- 長期保存、ビューア活用は表示の再現性を目的とした場合、PDQはデータの再利用が目的であるから目標とか達成すべき項目は当然異なる。
  - データ再利用を目的とした達成項目を策定することが必要
    - たとえば、公差属性を折れ線データとして渡している場合（XVL、3DXML）
      - 表示の再現性だけをチェック項目としていると、OK
      - 公差値を変更しようとする再利用（別のCAD）では、定義し直しとなる
    - たとえば、寸法属性が図形要素と関連ずけられていない場合（XVL）
      - 表示の再現性だけをチェック項目としていると、OK
      - その図形を変更しようとする再利用では、寸法属性の定義し直しとなる
    - たとえば、形状がポリゴンで渡された場合
      - 表示の再現性だけをチェック項目としていると、OK
      - その図形にCAD操作（フィレット）しようとする再利用では、できない

第3回委員会（9月16日）

平成 22 年度　第 3 回 PDQ 国際標準化要件検討委員会

1.　日　時　　2010 年 9 月 16 日(木)　14 時－17 時

2.　場　所　　機械振興会館 4 階　JIPDEC 第 3 会議室

3.　議　題　　・GD&Tの検討状況
　　・長期データ保存の検討状況

4.　配布資料

- PDQR10-03-01：平成 22 年度第 2 回 PDQ 国際標準化要件検討委員会　議事録
- PDQR10-03-02：PMI Errors and Corrections（D. Cheney, 改訂版）
- PDQR10-03-03：PMI Errors Types（D. Cheney, 改訂版）
- PDQR10-03-04：PMI Errors 整理（PDQ 規格開発委員）
- PDQR10-03-05：SASIG 3D Annotated Model Standard（SASIG）
- PDQR10-03-06：3D 図面独自の PDQ 項目候補例（小形）

以　上

平成 22 年度　第 2 回 PDQ 国際標準化要件検討委員会　議事録

日　時：7 月 28 日(水)　14 時－17 時
場　所：機械振興会館 4 階　JIPDEC 第 3 会議室
出席者：委員長　大高哲彦(NUL)
委員　平岡弘之(中央大)、菊地慶仁(北海学園大)、小林一也(富山県立大)、相馬淳人(エリジオン)、石川義明(MER)、多賀和春(ホンダ)、小形充生(スタンレー電気)、岩壁清行(NDE)、松永三夫(日立)、三富一弘(MHI)
オブザーバ　土橋俊夫(SJAC)
事務局　鈴木　勝(JIPDEC/DUPC)
（順不同、敬称略）　13 名

配布資料：
- PDQR10-02-01：平成 22 年度第 1 回 PDQ 国際標準化要件検討委員会　議事録
- PDQR10-02-02：LOTAR Executive Summary
- PDQR10-02-03：Questions and Answers on LOTAR
- PDQR10-02-04：Technical Considerations on PDQ-S Extension（大高）
- PDQR10-02-05：Business-condition-oriented data quality criteria（平岡）
- PDQR10-02-06：Expected contents of ISO 8000-311（相馬）
- PDQR10-02-07：Status of PDQ Standard Extension（大高）
- PDQR10-02-08：A Validation Technology for 3D CAD Data（相馬）
- PDQR10-02-09：PMI Quality Validation（D. Cheney）
- PDQR10-02-10：Error Type of PMI Quality Validation（D. Cheney）
- PDQR10-02-11：PMI Quality Validation 検討（PDQ 規格開発委員）
- PDQR10-02-12：スタンレー電気宿題回答（小形）
- PDQR10-02-13：各 OEM PDQ 展開項目一覧（多賀）
- PDQR10-02-14：JAMA/JAPIA　PDQ タスク会議資料（多賀）

議　事：
1. 土橋オブザーバの紹介（事務局）
- SJAC のオブザーバであった野中さんの後任として会議に出席する。

2. 配付資料の確認（事務局）
- 経費節減のため、今回から配付資料はモノクロ印刷にする。別途電子ファイルを配布するので、カラーが必要な場合はそちらを利用する。

3. 長期データ保存について（大高委員長）
- 初めての人もいるので、LOTAR Executive Summary（PDQR10-02-02）の内容をかいつまんで紹介した。LOTAR が意図しているのは"Recommended Practices"を出すことであるが、ある部分は拘束条件となるような国際標準規格になることを望んでおり、我々と連携することがよいと考えている。
- これに対して、2 月に各委員から出された質問をとりまとめて、LOTAR の Co-chair である Boeing 社の Mr. Zuray に送付した結果、3 月上旬に送られてきた回答（PDQR10-02-03）の内容を紹介した。その後 LOTAR 内部の組織替えがあったために、回答の中で約束していた追加資料の送付がまだできていないようである。我々としてはさらに細かい技術レベルの資料を入手しないと具体的な検討はできない。

(松永)LOTAR の技術資料はどの程度まとまっているのか。JEITA の方で勉強会を立ち上げるので、紹介したい。
→(大高)彼らの規格の開発状況を見ると分かる。
→(事務局)発行済みの EN 規格は日本規格協会から購入できると思う。
→(石川)PDQR10-02-03 の中で引用されているいくつかの 9300 シリーズ規格は、PDQR10-02-02 の方にも載っている。SJAC が 9100 規格を欧米と共同開発したチャネルから入手方法が分か

らないか。
→(土橋)調べてみる。
→(大高)航空機業界の方で正式に入手できない資料があれば、こちらのチャネルから要望してみるので教えてほしい。規格開発の立場からは、Part 100 シリーズの技術規格を入手して見ると大体が分かる。
→(石川)ユーザの立場からは、Part 2（Requirements）や Part 3（Fundamentals and concepts）を見る必要がある。
→(大高)後ほどメールでよいから何が必要か提示してほしい。
→(事務局)会議後の調査により、ドイツの ProSTEP が次の URL http://www.prostep.org/de/projektgruppen/langzeitarchivierung-lotar/the-lotar-standard.html で EN 9300 シリーズ規格の開発状況を掲載しており、開発が進んでいるものについては、表紙と目次をダウンロードできることが分かった。また、入手希望の規格文書は(財)日本規格協会から購入できることを確認したので、これらの情報を委員各位に案内した。
(松永)JEITA では長期データ保存の課題を列挙しているが、解決方法はまだ検討していないので、規格文書の内容を調査して、解決策が含まれているか比較してみる。月 1 回の会合で検討を進めている。
(大高)自動車業界の検討はどうか。
→(小形)何のためにどういう情報を保存すべきかのマトリックスの明確化が必要であるが、あまり細かくなり過ぎると全体が見えなくなるので、コンパクトにまとめた上で、保存期間や手段を現実的に詰める必要がある。
(大高)航空機業界ではどうか。
→(三富)Boeing や Airbus はずっと進んでいるので、まずできている規格を調べたい。我々以上に苦労しているはずなので、大きな枠では取りこぼしはしていないと思う。

4. 新 PDQ 規格開発概要の紹介（大高委員長、PDQR10-02-07）
- 乗用車 1 台を計測すると約 1 千万点になる。
- Bethlehem 会議で“non shape data”は広すぎると言われたので、”non shape CAD data”に変更する。

5. PDQ 拡張機能の技術概要紹介（大高委員長、PDQR10-02-04）
- Bethlehem 会議では、流体解析への応用を考えると差分法は除外しない方がよいと言われたので宿題にした。さらに、FEM や測定データの分野では STEP はあまり使われていないので、取り組む場合はそれぞれの領域の主要なユーザ組織やベンダと連携して、その要望を取り入れる必要があると指摘された。
- GD&T では主として STEP が使われているため、取り組みを強く要望されたので、検討を開始した。GD&T のニーズを持っている世界の自動車業界/航空機業界/防衛関係と連携できることは重要である。
- Sketch/Feature はやらないという提案が同意され、一方、Parametrics については時期尚早と言われた。

(石川)Sketch/Feature は、SASIG PDQ Guidelines にも non geometric として挙げられているが、それを取り上げなくてもよいということか。
→(大高)やらなくてもよいというのは、STEP のデータモデルに準拠したデータの品質であって、SASIG PDQ Guidelines にあるものは”non shape CAD data”として取り上げるかもしれない。

6. スタンレー電気の宿題回答（小形委員、PDQR10-02-12）
(大高)シェル要素の裏表チェックは FEM システムでもやっている。
(平岡)スライド 3 の 3 種類のシナリオの違いは何か。
→(小形)1 番目は、STEP の Quality Stamp データが STEP ファイルの中にあると想定して、Viewer で Quality Stamp データだけを見られるようにする必要がある。2 番目と 3 番目の違いは、Quality Stamp データが CAD ファイルの内部にあるか外部にあるかの違いによる。CAD ファイルの内部にある場合は、STEP と同様に Viewew が必要と考える。
→(平岡)今の Part 59 では、Quality Stamp データは STEP と同一ファイルになる。

→(大高)Part 59 の Quality Stamp の内容は SASIG PDQ Guidelines よりも詳細である。
(相馬)ENGDAT とはどういうもので、どのくらい使われいるのか。
→(小形)標準的なデータを送付する場合の仕様で、ENGDAT Package の中に一連の関係するデータを入れ、そのインデックスとして ENGDAT Delivery Note を付けて、どういうデータが含まれているのかが示される。2005 年から JAMA の 14 社が運用することを宣言したが、まだ 1 社も使っていない。
→(大高)ENGDAT は欧州の ODETTE が中心になって作成した規格である。
→(相馬)元々の SASIG PDQ Guidelines の Quality Stamp は ENGDAT Package の中に入ることになっていたのか。
→(小形)そういう議論はあまりされていないと思う。ENGDAT は中身をあまり規定していない。

7. 8000-311 の内容紹介（相馬委員、PDQR10-02-06）
- この資料を WG13 で説明したが、理解できる人がいないため反応がなかった。
- 次回の SC4 会議までにもう少し詳細化する。

(大高)前回の委員会の議事録にあるように、エンドユーザの利用シナリオに沿った記述をしたいので、材料を多賀さんから提供していただきたい。

8. A Validation Technology for 3D CAD Data（相馬委員、PDQR10-02-08）
- Bethlehem 会議の Open Technical Forum で説明したもので、CATIA による 3D 単独図（形状/アセンブリ/PMI のデータを含む）を JT に変換した際の、再現性検査に関する考察である。

9. ビジネス条件依存項目の実現方法（平岡委員、PDQR10-02-05）
(多賀)Table 1 の元になった資料の改訂版ができたので、あとで紹介する（PDQR10-02-13）。
(大高)リソースでなくてモジュールで実現するという説明は、どちらでも同じだと言われないか。
→(平岡)リソースを組み合わせて、AP で使い易いレベルの要素（モジュール）として実現する。
(大高)Bethelehem 会議では、予想どおり国際規格化になじむのかと指摘されたので、実現方法とメリットを説明して一応の了解は得たが、次回の会議でさらに説明することになっている。
(小形)ビジネス条件による仕様は、自分の資料（PDQR10-02-12）のスライド 2 にある PDQ 仕様書に含められるのか。
→(大高)現在のところ形状については含まれるが、ビジネス条件依存項目は外部の文書になる。
→(小形)ユーザの立場からは、PDQ 仕様書に一緒に含まれないと使えない。
→(大高)検討する。
(石川)Figure 1 にビジネス条件依存項目と外部参照の構造を加えて書いた方がよい。

10. GD&T の検討資料紹介（大高委員長、PDQR10-02-09, -10, -11）
- Bethlehem 会議後に、NIST の GD&T 検討プロジェクト（DoD の依頼）に参加している米国の Doug Cheney と交流して PDQR10-02-09 と-10 を入手し、それに対して PDQ 規格開発委員が検討した結果が PDQR10-02-11 である。
- 規格開発側の所感としては、入手資料の内容はあまりに末端のレベルで、上位構造が分からない。皆さんにも資料を見てもらって、意見を出したもらいたい。

(小形)どういう検討をすればよいのか。
→(大高)たとえば、こういう列挙でよいのか、もっと重要な項目があるのか、もっと上位の構造や整理に仕方が必要なのか、などである。PDQR10-02-10 は先方による分類の一例であるが、我々開発メンバとしては、もう少し品質問題の全体がとらえられるような分類が必要と考えている。
(大高)この資料によると、対象形状すべてが feature になっていないとチェックできないが、現在の CAD ではそれは成り立たない。
(資料訂正)PDQR10-02-11 の最初の部分の凡例にある「形態」は「形体」の誤りである。
(岩壁)PDQR10-02-09 の前提は、CAD の feature の自動寸法付けの不具合の問題なのか。あるいは、正しく作られた CAD データを他の形式に変換した結果がおかしくなるということなのか。設計者の側ではこんな間違いはしない。
→(大高)GD&T データの授受で困っている問題と思われるので、後者かもしれない。岩壁さんの経験から、GD&T の問題の分類の軸を提示してほしい。

→(岩壁)3D 単独図が流通するようになったら、こんなことがいろいろ出てくると予想される。
(石川)SASIG PDQ Guidelines にある GD&T の項目はどのレベルまで考えられているのか。
→(多賀)こういうレベルまでは検討していない。
→(小形)CAD からビューアに変換する場合の問題を JAMA/JAPIA で検討した資料がある。
→(大高)3D 単独図におけるデータ品質で気になっていることを提示してほしい。
(松永)作成時の誤りは CAD のチェック機能で排除できるので、データ変換で生じる問題を対象にすればよい。PDQR10-02-09 は ASME 形式を基準にしているが、本来は ISO 形式を基準として検討する必要がある。
(大高)この資料の中で、CAD ではあり得ない項目と、データ変換で化ける可能性がある項目に分類するのはすぐにできる。
→(松永)個々の項目を分類してチェックするのは大変なので、CAD データと変換後のデータを比較し、違いをはっきりさせてチューニングするツールが役立つ。
→(大高)Part 59 では形状の品質問題を分類して階層構造化しているので、それと同様に GD&T の品質問題を整理したい。どういう分類の項目が多いかによって作業量が違ってくる。
→(松永)数値系の機能だけなら分類は必要ないが、PMI の機能になると別の分類が必要になるかもしれない。
→(大高)彼らがいう PMI は、設計定義段階で考慮できる範囲のことだけである。
(大高)3D 単独図の普及にとってまずい GD&T のデータ品質を摘出したい。
→(松永)宿題としては設計データのあるべき要件まで含まれるのか。
→(大高)まず GD&T に限定してよい。Doug Cheney とは有効な最小セットを定義することになっている。
(岩壁)金型工業会では JEITA と共同で 3D 単独図の活用検討会を発足させるところなので、その結果がまとまったら提供できる。
→(大高)1 年後までくらいには最小セットを固めたいので、それ以前に判断材料として第一版ができたらいただきたい。
(多賀)PDQR10-02-14 は、JAMA/JAPIA の長期保存プロジェクトに対する PDQ チームからの申し送り事項を検討したものであるが、GD&T データの予想される問題点を挙げている。
→(大高)PDQR10-02-11 の先頭にある A, B, C と似ている。
(大高)まず開発チームのコメントを Doug Cheney に提示するが、本日の議論を踏まえて、この委員会のメンバとしてコメントを出していただきたい。
→(松永)JEITA としては二ヶ月くらいで最初の回答を出したい。
→(三富)航空機業界の機体メーカでは CAD は CATIA で統一されているので、PMI や GD&T の件は独自のコメントがあるか疑問であるが、次回までには何らかの回答をしたい。

11. 各 OEM の PDQ 展開項目一覧の改訂版（多賀委員、PDQR10-02-13）

- これとは別に、PDQ-S を採用した PDQ ガイドライン V5.1 の実装についてツールベンダ 3 社に打診した結果、2 社は来年前半までに対応するとの回答があったが、1 社は処理時間などの懸念から採用しない項目を列挙している。

12. 次回の予定

- 日時：9 月 16 日(木)　14 時－17 時
- 場所：機械振興会館 4 階　JIPDEC 第 3 会議室

以上

Figures – Errors and Corrections: PMI Errors and Violations from a Quality Perspective

Part of the

"Validating a Certified Technical Data Package for the Model-Based Enterprise Project" for BAE/NIST

July 12, 2010

Revision C.1

Client Confidential

Prepared for: ITI TranscenData

Prepared by: Bryan R. Fischer – Advanced Dimensional Management LLC – 2010

© Advanced Dimensional Management LLC – All Rights Reserved – Unrestricted rights granted to NIST, BAE, ITI TranscenData

Errors

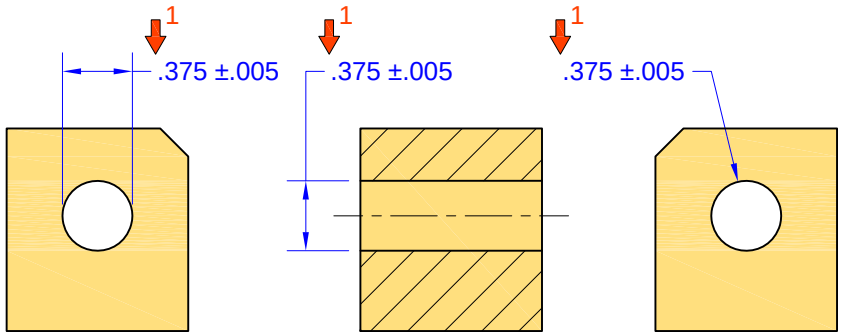

Orthographic Views

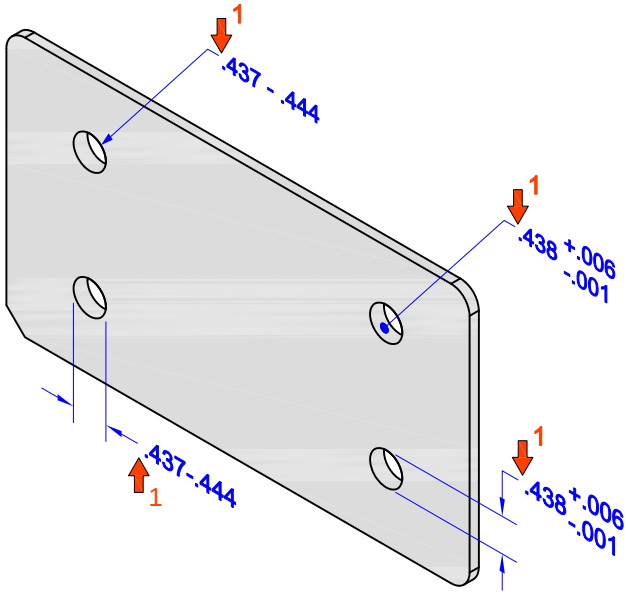

Axonometric View

Figure 1-1
PMI Errors: Missing Diameter Symbol in Size Dimension:
Various Examples in Orthographic and Axonometric Views

Correct Specifications

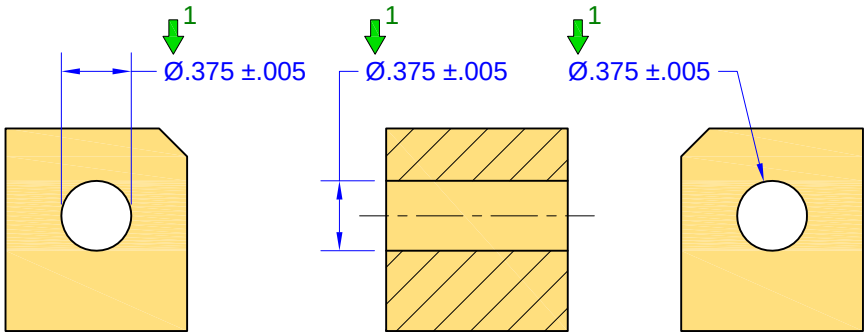

Orthographic Views

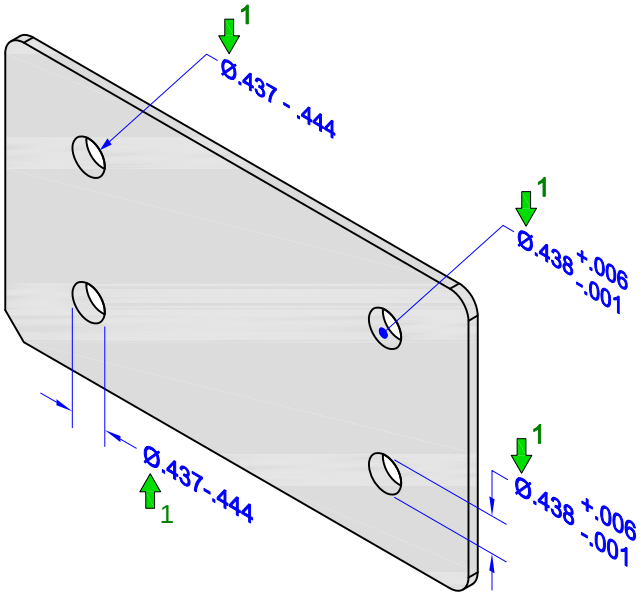

Axonometric View

Figure 1-1
Correct Specifications

1. Type Error - Dimension Missing Diameter Symbol in Size Dimension

PMI Errors 1a

© Copyright Advanced Dimensional Management LLC – 2010 – All Rights Reserved – Unrestricted rights granted to NIST, BAE Systems, and ITI Transcendata

Errors

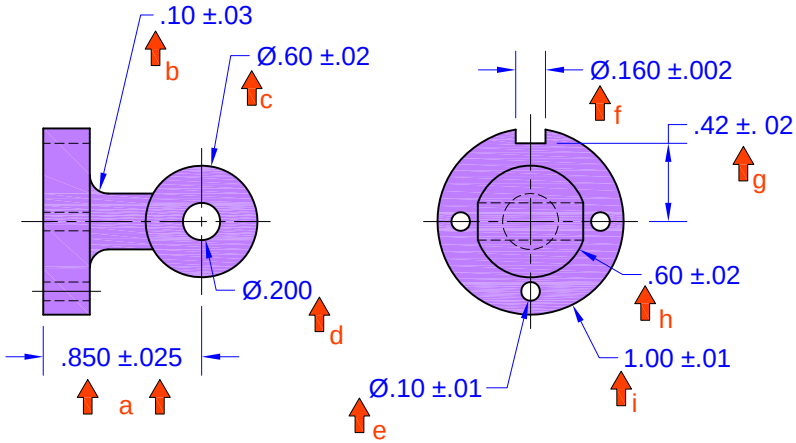

Figure 1-2
PMI Errors: Various Dimensioning Errors

Correct Specifications

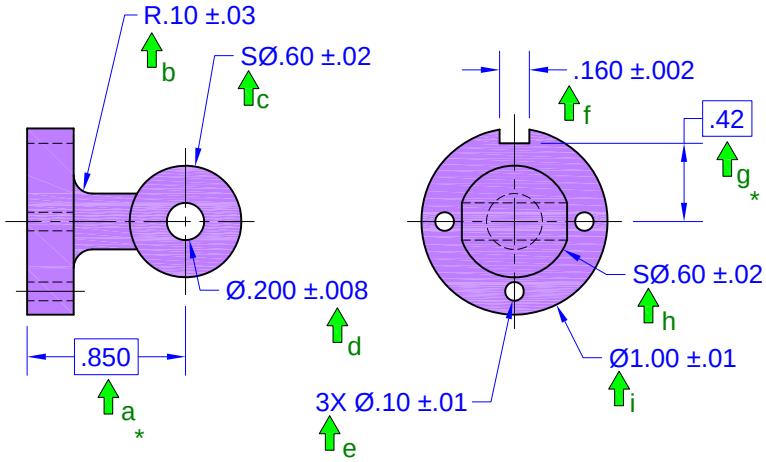

Figure 1-2
Correct Specifications

a. Directly Toleranced Dimension Use Error - Used to locate or orient features (ASME Y14.41)

b. Type Error - Dimension - Missing R or CR symbol for radius feature

c. Type Error - Dimension - Missing "S" in SØ symbol for spherical feature dimension

d. Missing Tolerance Error - Missing tolerance for directly toleranced dimension (non-basic)

e. Quantity Error - "nX" quantity specification missing

f. Type Error - Dimension - Inappropriate diameter symbol specified for width feature dimension

g. Type Error - Dimension - Directly-toleranced dimension used where a basic dimension should be used - to locate or orient features (ASME Y14.41)

h. Type Error - Dimension - Missing SØ symbol for spherical feature dimension

i. Type Error - Dimension - Missing Ø symbol for cylindrical feature dimension

* Note: GD&T for basically-dimensioned features not shown

© Copyright Advanced Dimensional Management LLC – 2010 – All Rights Reserved – Unrestricted rights granted to NIST, BAE Systems, and ITI Transcendata

Errors

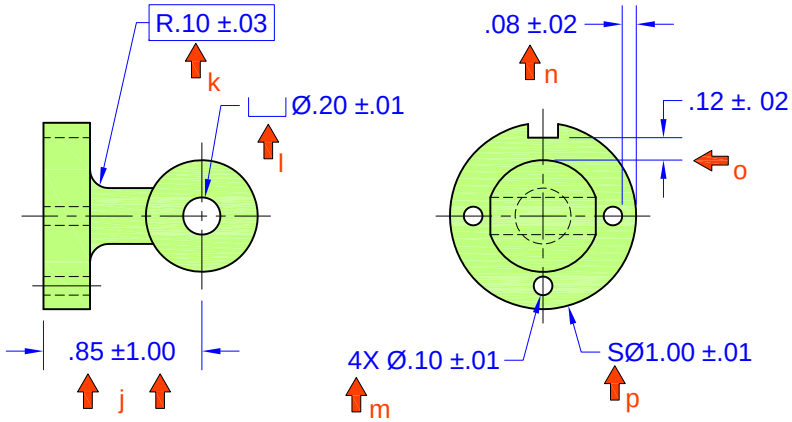

Figure 1-3
PMI Errors: Various Dimensioning Errors

Correct Specifications

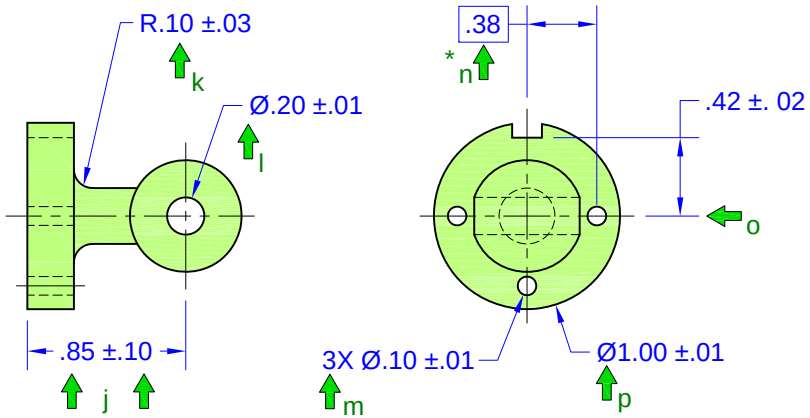

Figure 1-3
Correct Specifications

j. Tolerance Magnitude Error - Tolerance value is greater than the dimension value

k. Inappropriate Basic Dimension Frame - Frame shown around directly toleranced dimension

l. Inappropriate Shape Symbol - Counterbore symbol shown on feature that is not a counterbore

m. Quantity Error - "nX" specifies wrong quantity

n. Inappropriate origin or terminus of a dimension - Dimension to or from the edge of a cylindrical feature (hole or shaft)

o. Dimension Origin and Terminus Error - Directly-toleranced dimension to or from a typically inappropriate feature or element, such as the tangent edge of a sphere

p. Type Error - Dimension - Inappropriate SØ symbol for cylindrical feature dimension

* Note: Geometric tolerances for features defined by basic dimensions not shown

© Copyright Advanced Dimensional Management LLC – 2010 – All Rights Reserved – Unrestricted rights granted to NIST, BAE Systems, and ITI Transcendata

Errors

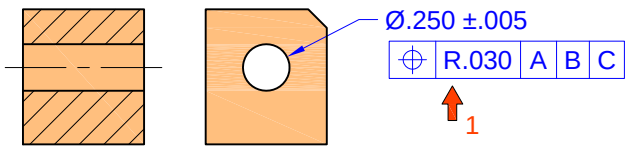

Figure 2-1
PMI Errors: Geometric Tolerance Zone Shape Error

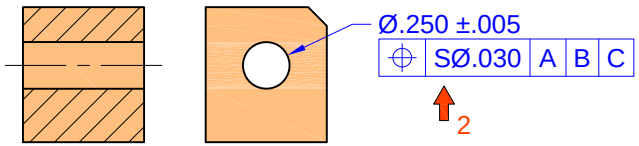

Figure 2-2
PMI Errors: Geometric Tolerance Zone Shape Error

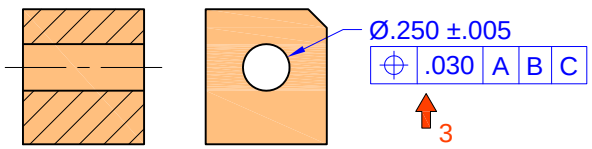

Figure 2-3
PMI Errors: Application Error

Correct Specifications

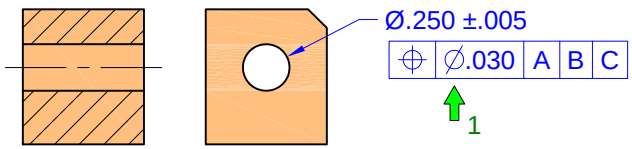

Figure 2-1
Correct Specifications

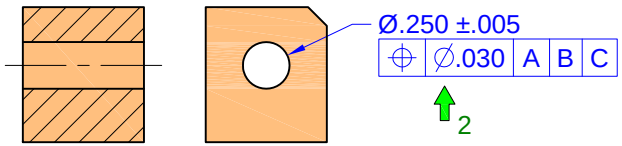

Figure 2-2
Correct Specifications

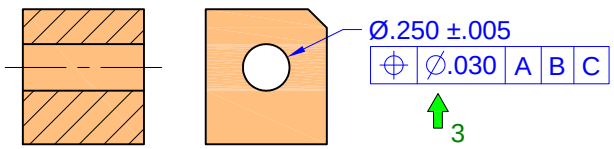

Figure 2-3
Correct Specifications

1. Geometric Tolerance Zone Shape Error - Geometric Tolerance Specified with a Radius Symbol R
2. Geometric Tolerance Zone Shape Error - Spherical Tolerance Zone Specified for a Cylindrical Feature of Size
3. Application Error - Leader-Directed Positional Tolerance Applied to a Round Feature Without a Diameter Symbol

© Copyright Advanced Dimensional Management LLC – 2010 – All Rights Reserved – Unrestricted rights granted to NIST, BAE Systems, and ITI Transcendata

Errors

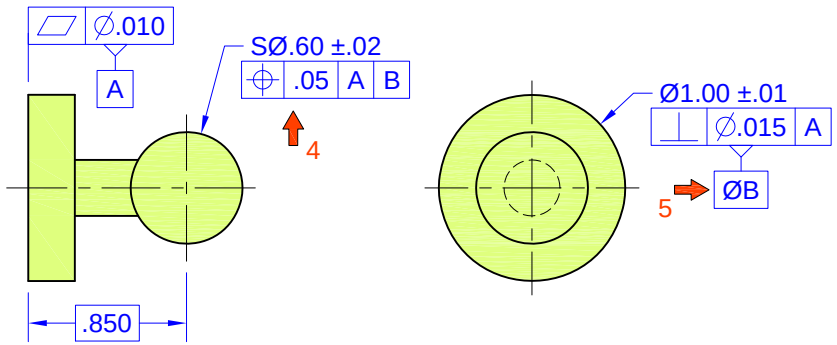

Figure 2-4
PMI Errors: Geometric Tolerance Zone Shape Error and Datum Feature Labeling Errors

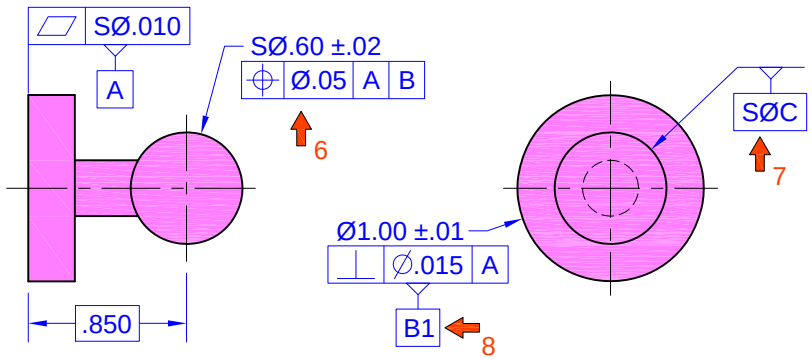

Figure 2-5
PMI Errors: Geometric Tolerance Zone Shape Error and Datum Feature Labeling Errors

Correct Specifications

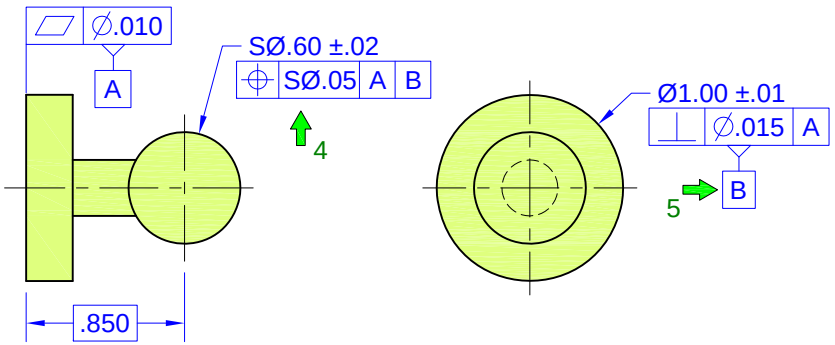

Figure 2-4
Correct Specifications

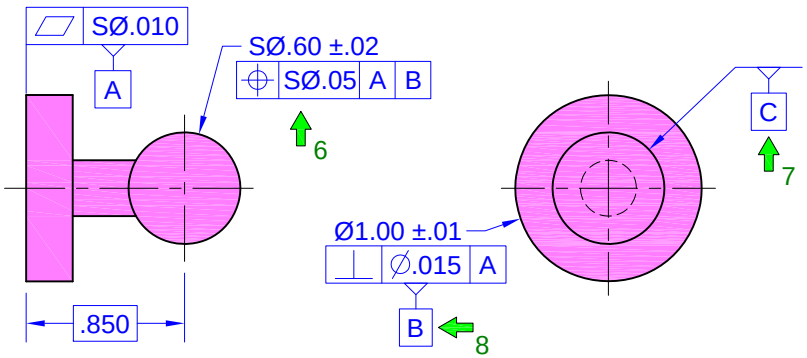

Figure 2-5
Correct Specifications

4. Geometric Tolerance Zone Shape Error - Missing Spherical Diameter Symbol in Positional Tolerance Feature Control Frame - Orientation of Parallel-Plane Tolerance Zone Unclear
5. Inappropriate Symbol Used in a Datum Feature Symbol - Diameter symbol not required inside Datum Feature Symbol - Only letters are allowed
6. Geometric Tolerance Zone Shape Error - Missing Spherical Diameter Symbol in Positional Tolerance Feature Control Frame - Orientation of Cylindrical Tolerance Zone Unclear
7. Inappropriate Symbol Used in a Datum Feature Symbol - Spherical Diameter symbol not required inside Datum Feature Symbol - Only letters are allowed
8. Inappropriate Symbol Used in a Datum Feature Symbol - Numbers are not required inside Datum Feature Symbol - Only letters are allowed (Numeric suffixes are used with Datum Targets, not Datum Features

© Copyright Advanced Dimensional Management LLC – 2010 – All Rights Reserved – Unrestricted rights granted to NIST, BAE Systems, and ITI Transcendata

Errors

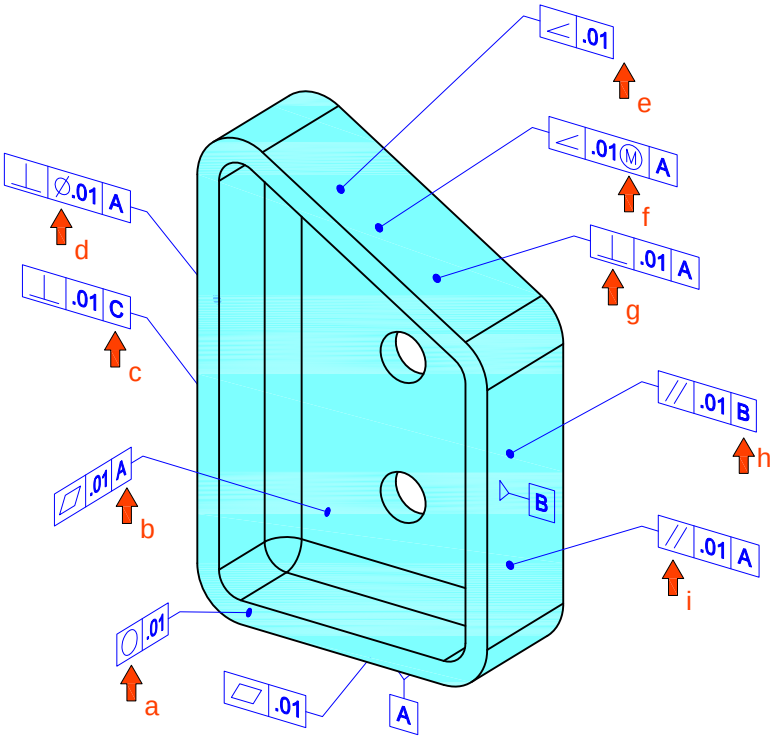

Figure 2-6
PMI Errors: Various Geometric Tolerancing Errors

Correct Specifications

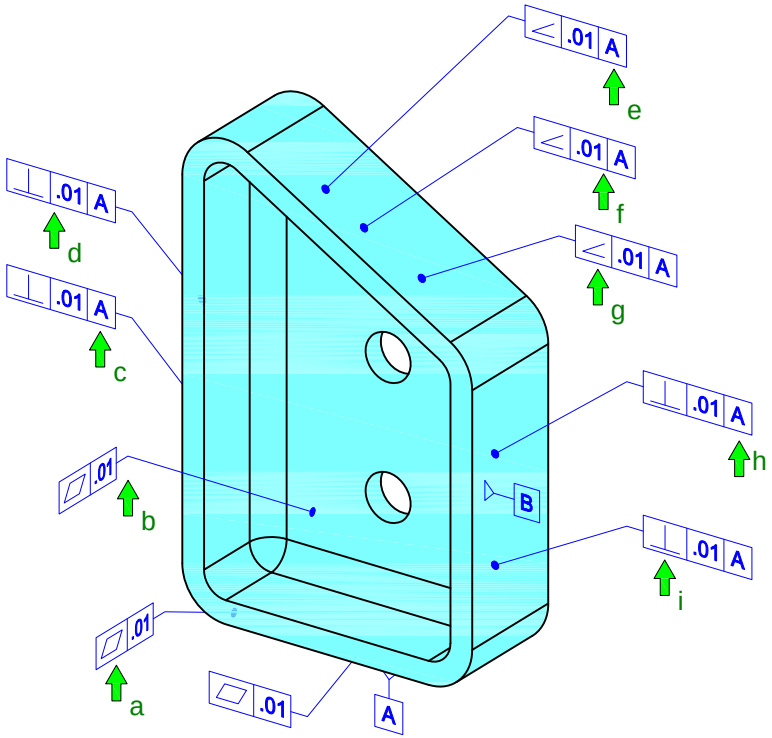

Figure 2-6
Correct Specifications

a. Tolerance Application Error - Form tolerance (Circularity) applied to inapplicable feature type
b. Unauthorized Datum Feature Reference Error - Form tolerance includes a datum feature reference
c. Unspecified Datum Feature Error - Geometric tolerance references undefined Datum Feature
d. Tolerance Zone Shape Error - Diametral tolerance zone specified inappropriately
e. Missing Datum Feature Reference Error - Orientation tolerance must Reference a Datum Feature
f. Material Condition Modifier Error - Modifier applied inappropriately to feature without size (Orientation tolerances may only be specified with MMC modifier if toleranced feature is a feature of size)
g. Tolerance Application Error - Inappropriate orientation tolerance (Perpendicularity) applied where a different tolerance should be specified (Angularity)
h. Self-Referential Datum Feature Reference Error - Datum Feature B toleranced to Datum B
i. Tolerance Application Error - Orientation tolerance (Parallelism) applied where a different tolerance should be specified (Perpendicularity)

© Copyright Advanced Dimensional Management LLC – 2010 – All Rights Reserved – Unrestricted rights granted to NIST, BAE Systems, and ITI Transcendata

Errors

1. DIMENSIONING AND TOLERANCING PER ASME Y14.5M-1994

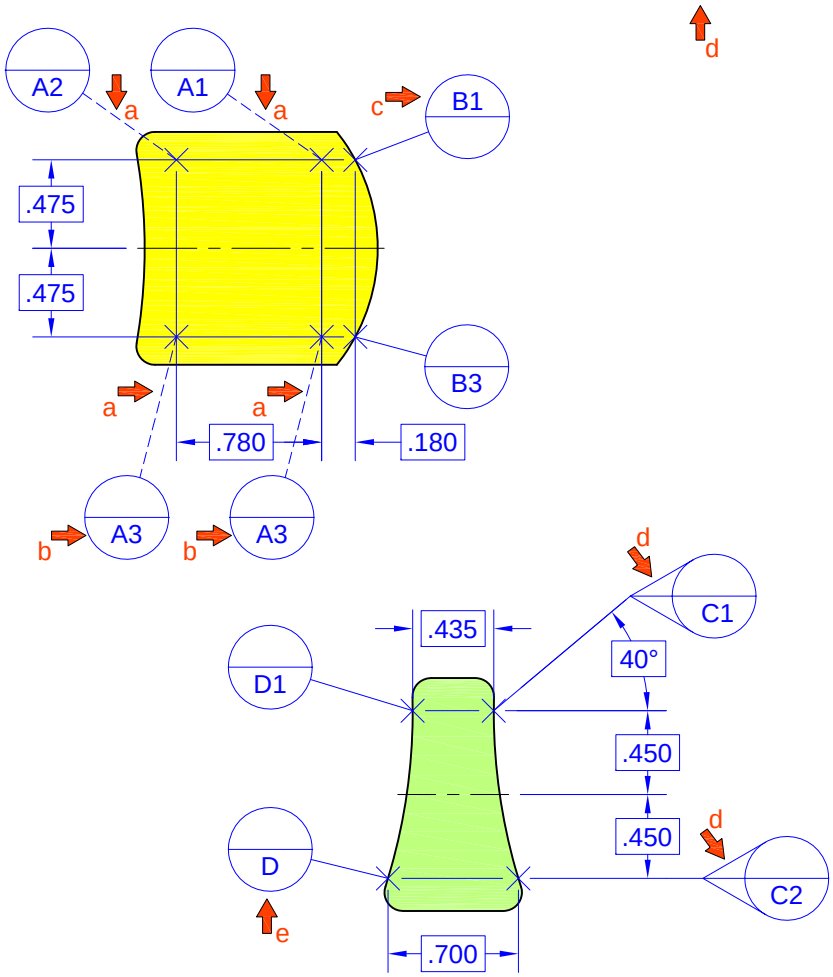

Figure 3-1
PMI Errors: Datum Target and Target Leader Errors

Correct Specifications

1. DIMENSIONING AND TOLERANCING PER ASME Y14.5-2009

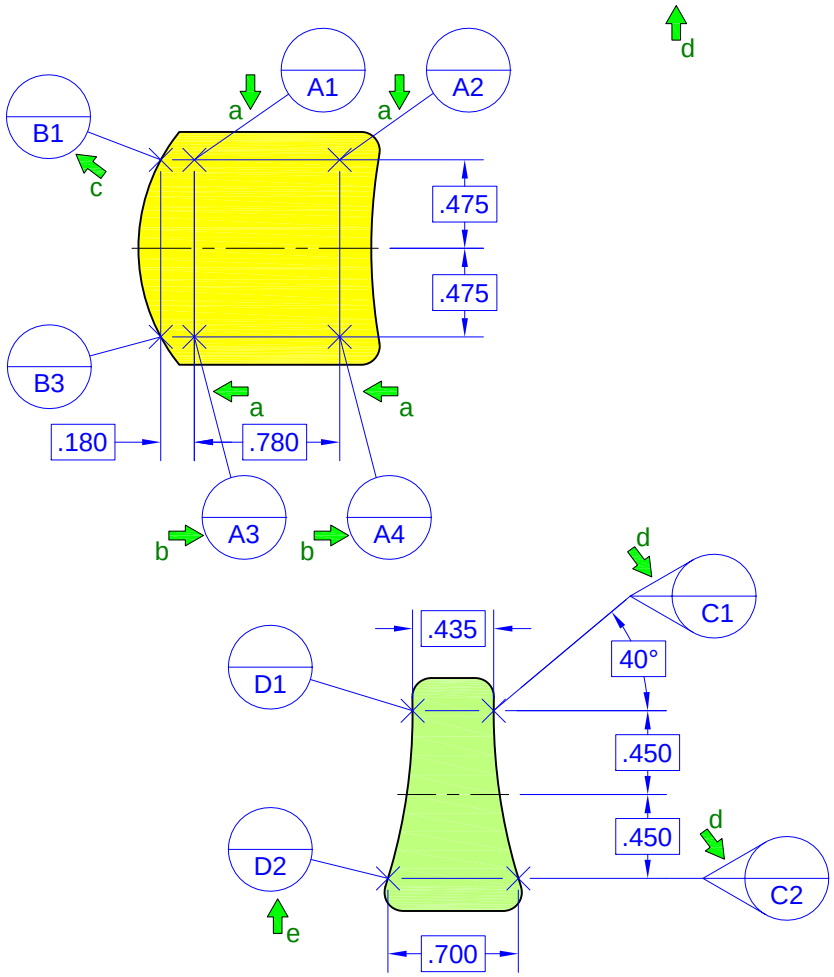

Figure 3-1
Correct Specifications

a. Disallowed Leader Line Error - Use of Hidden Line Leaders on Models (ASME Y14.41)

b. Datum Target Specification Error - Duplicate Target Specification

c. Datum Target Specification Error - Incorrect Datum Target Specification - Format error

d. Standard Reference Error - Movable Datum Target Symbol used with ASME Y14.5M-1994 without referencing ASME Y14.8-1996 or later (Alternate solution: Reference ASME Y14.5-2009)

e. Datum Target Specification Error - Invalid Specification - Missing Numeric Suffix

© Copyright Advanced Dimensional Management LLC – 2010 – All Rights Reserved – Unrestricted rights granted to NIST, BAE Systems, and ITI Transcendata

Errors

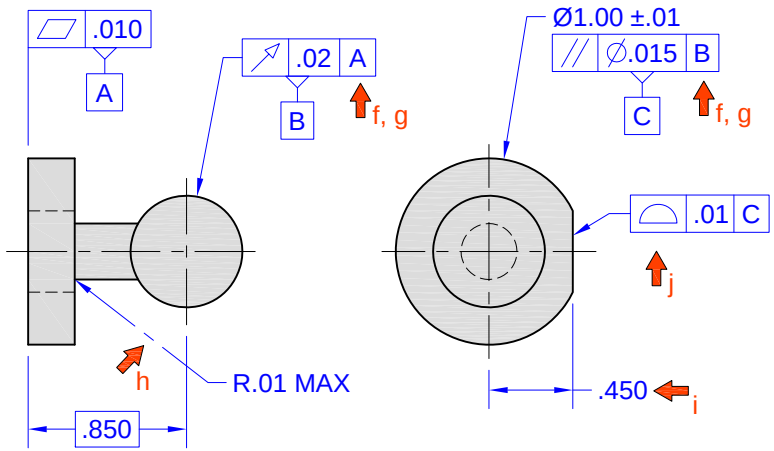

Figure 3-2
PMI Errors: Various Dimensioning and Tolerancing Errors

Correct Specifications

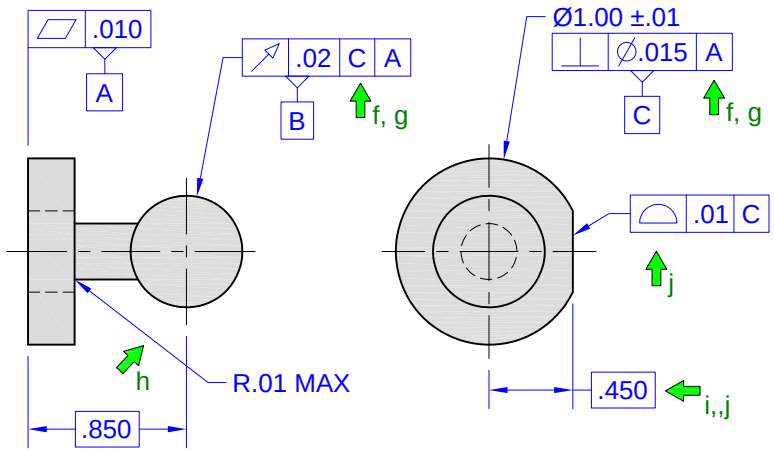

Figure 3-2
Correct Specifications

f. Datum Feature Reference Type Error - Wrong type of datum feature referenced (Runout requires a datum axis and cannot be parallel to a single datum center point)

g. Datum Feature Reference Type Error - Insufficient Degrees of Freedom constrained by referenced datum features

h. Inappropriate Leader Line Error - Center line, phantom line, etc. (Violation of best practice)

i. Type Error - Dimension - Basic dimension must be used where profile tolerance controls orientation and/or location of a surface

j. True Profile Definition Error – Form/orientation/location controlling profile applied to surface oriented/located using directly toleranced dimension

© Copyright Advanced Dimensional Management LLC – 2010 – All Rights Reserved – Unrestricted rights granted to NIST, BAE Systems, and ITI Transcendata

Errors

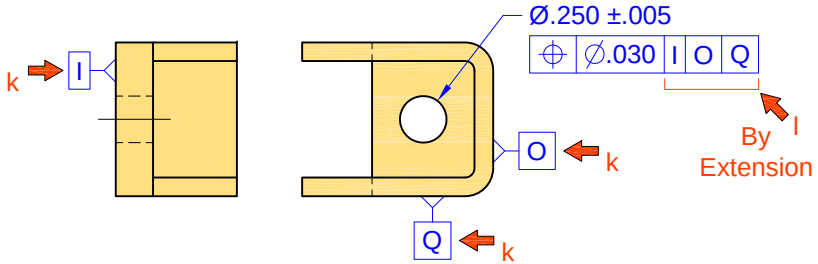

Figure 3-3
PMI Errors: Datum Feature Specification and Referencing Errors

DIMENSIONING AND TOLERANCING PER ASME Y14.5M-1994
OR ASME Y14.5-2009

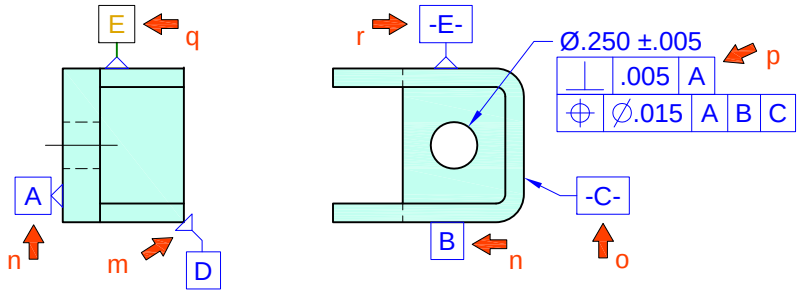

Figure 3-4
PMI Errors: Datum Feature Specification and Referencing Errors

Correct Specifications

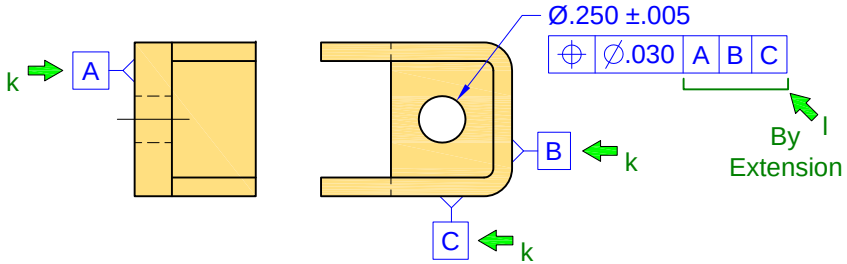

Figure 3-3
Correct Specifications

DIMENSIONING AND TOLERANCING PER ASME Y14.5M-1994
OR ASME Y14.5-2009

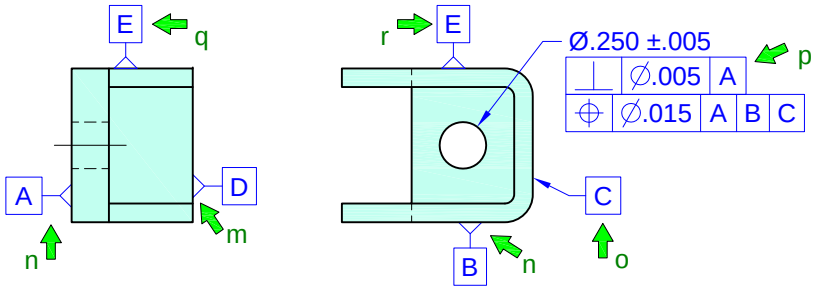

Figure 3-4
Correct Specifications

k. Datum Feature Specification Error - Inappropriate Datum Feature Letter Specified (I, O, or Q)

l. Datum Feature Reference Error - Inappropriate Datum Feature Letter Referenced

m. Datum Feature Symbol Error - Attachment Error - Ambiguous Specification

n. Datum Feature Symbol Error - Incomplete Datum Feature Symbol Used

o. Datum Feature Symbol Error - Wrong Datum Feature Symbol Used (Datum Feature Symbol from ANSI Y14.5M-1982 or before)

p. Geometric Tolerance Zone Shape Error - Leader-directed Orientation Tolerance Specified Without a Diameter Symbol

q. Datum Feature Symbol Geometry Error - Incorrect Geometry Used in Construction of Datum Feature Symbol

r. Combined Datum Feature Symbol Error - Datum Feature Symbol from ANSI Y14.5M-1982 or Before Combined with Current Symbol

© Copyright Advanced Dimensional Management LLC – 2010 – All Rights Reserved – Unrestricted rights granted to NIST, BAE Systems, and ITI Transcendata

Errors

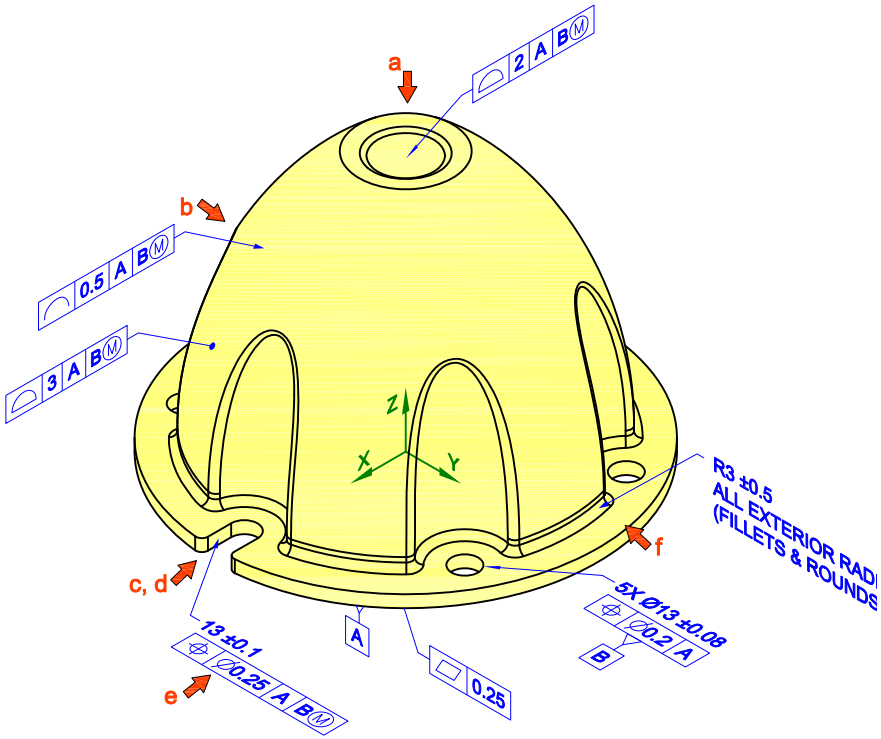

Figure 4-1
PMI Errors: Various Model-Based Dimensioning and Tolerancing Errors

Correct Specifications

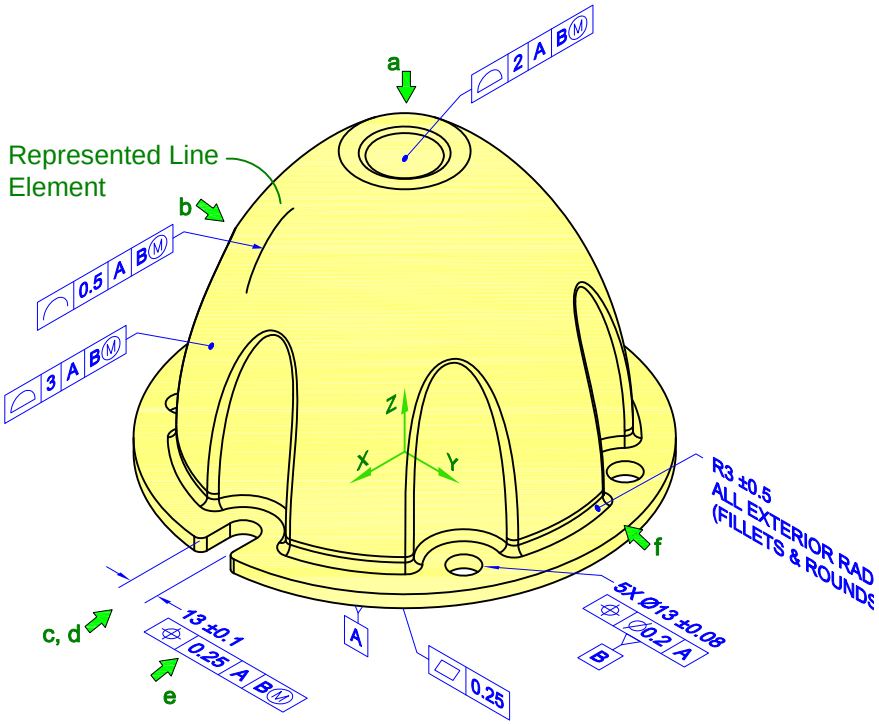

Figure 4-1
Correct Specifications

a. Arrowhead / Terminus Error - Leader Line - Leader directed to surface within feature outline should terminate in a dot (ASME Y14.41) [Also Attachment Error]

b. Direction Dependent Tolerance Error - Missing supplemental geometry indicating direction tolerance applies

c. Feature of Size Dimension Attachment Error - Directly Toleranced Dimension (Size dimension and tolerance) directed to/attached to only one surface of width feature of size

d. Application Error - Leader directed to surface within feature outline should terminate in a dot (ASME Y14.41)

e. Geometric Tolerance Zone Shape Error - Inapplicable Symbol - Inappropriate diameter symbol specified for width feature dimension

f. Arrowhead / Terminus Error - Leader Line - Leader directed to surface within feature outline should terminate in a dot (ASME Y14.41) [Also Attachment Error]

© Copyright Advanced Dimensional Management LLC – 2010 – All Rights Reserved – Unrestricted rights granted to NIST, BAE Systems, and ITI Transcendata

Errors

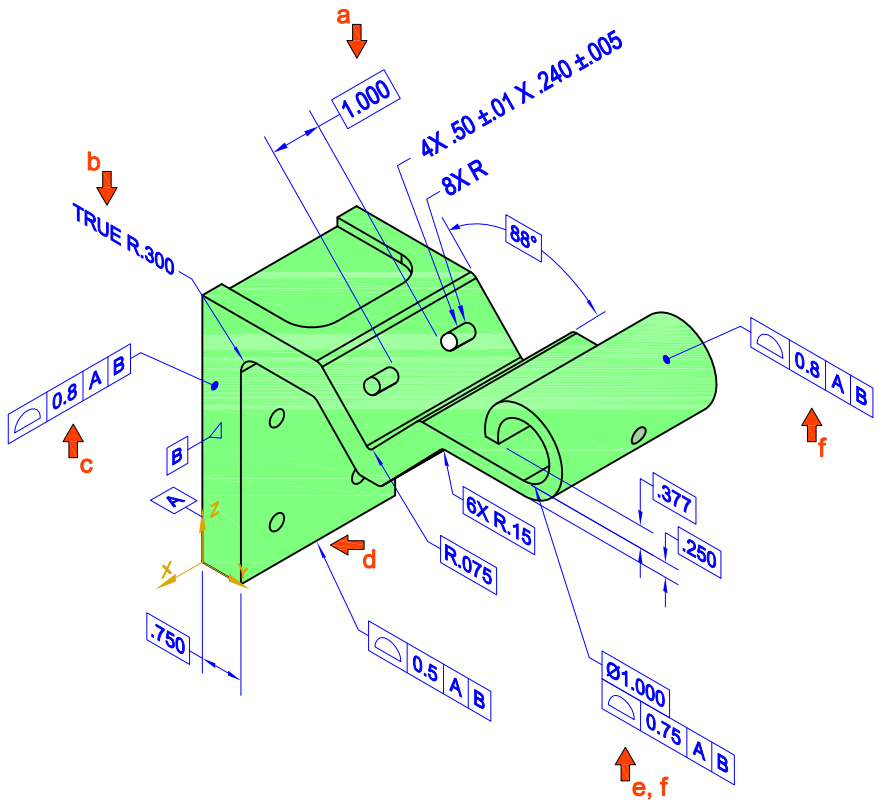

Figure 5-1
PMI Errors: Various Model-Based Dimensioning and Tolerancing Errors

Correct Specifications

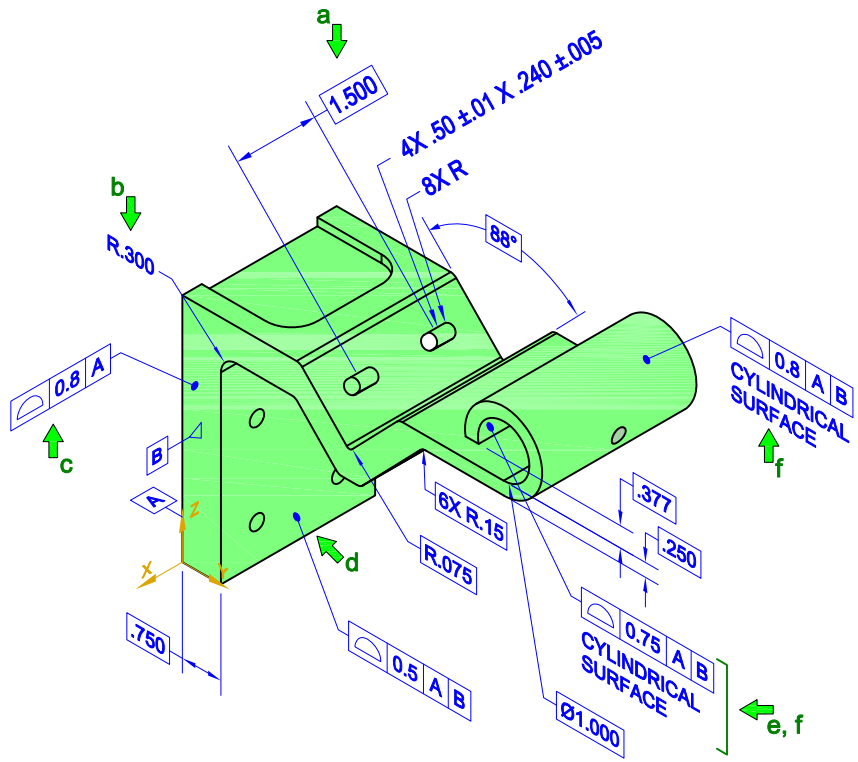

Figure 5-1
Correct Specifications

a. Dimension and Terminus Error - Dimension to/from edge of hole of tangent to radius (violation of best practice)

b. Disallowed KEYWORD Error - the keyword "TRUE" is prohibited on annotated models

c. Self-Referential Datum Feature Reference Error - Datum feature is toleranced relative to the datum derived from the datum feature

d. Attachment Error - Leader directed to edge rather than surface - unclear which surface is controlled

e. Attachment Error - Profile tolerance attached to basic dimension

f. Tolerance Extents Error - the extents the tolerance applies are unclear [may be clarified by query and cross-highlighting]

© Copyright Advanced Dimensional Management LLC – 2010 – All Rights Reserved – Unrestricted rights granted to NIST, BAE Systems, and ITI Transcendata

Errors

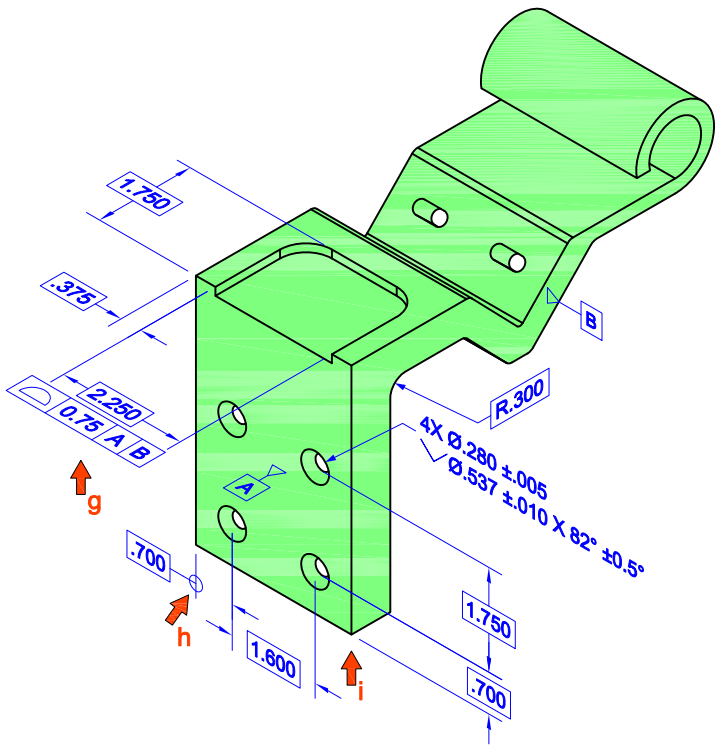

Figure 5-2
PMI Errors: Various Model-Based Dimensioning and Tolerancing Errors

Correct Specifications

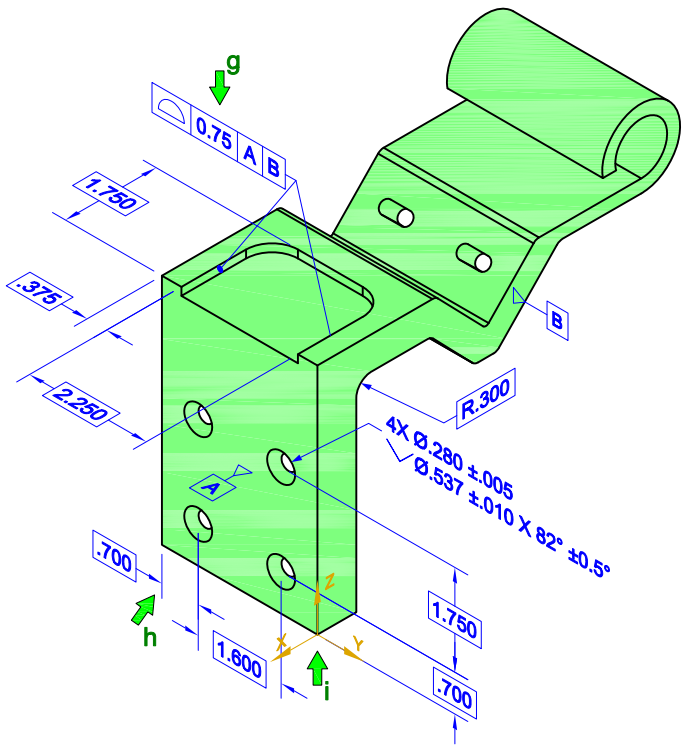

Figure 5-2
Correct Specifications

g. Attachment Error - Profile tolerance attached to basic dimension
h. Dimension Origin Error - Dimension origin symbol applied to basic dimension
i. Model Coordinate System Error - Model Coordinate System Missing from Saved View

© Copyright Advanced Dimensional Management LLC – 2010 – All Rights Reserved – Unrestricted rights granted to NIST, BAE Systems, and ITI Transcendata

Errors

1. DIMENSIONING AND TOLERANCING PER ASME Y14.5-2009
2. UNITS: INCHES

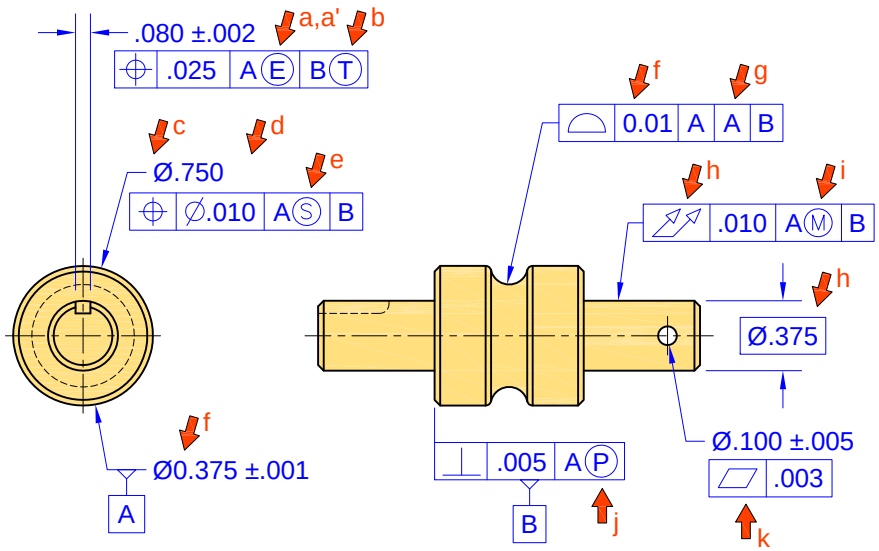

Figure 6-1
PMI Errors: Various Dimensioning and Tolerancing Errors

Correct Specifications

1. DIMENSIONING AND TOLERANCING PER ASME Y14.5-2009
2. UNITS: INCHES

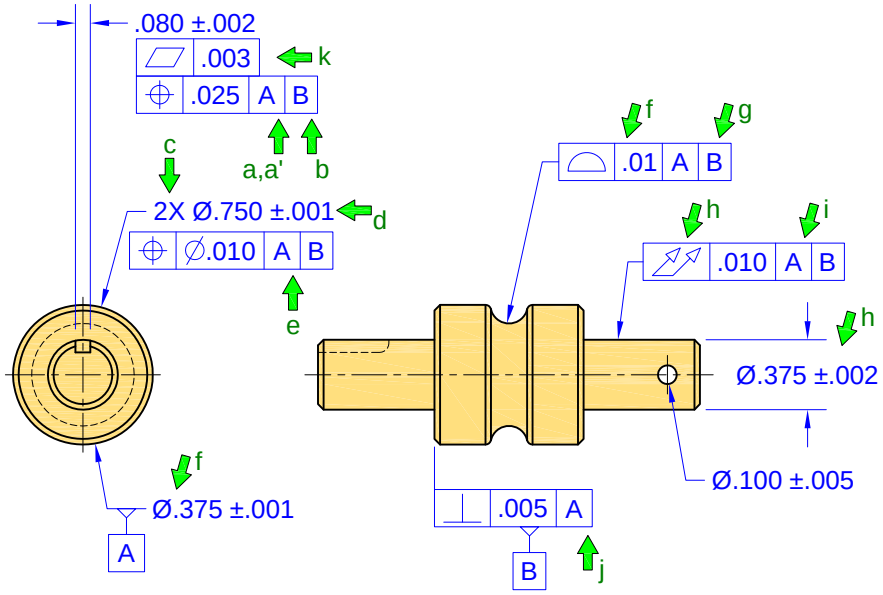

Figure 6-1
Correct Specifications

a. Inapplicable modifier for Datum Feature reference - unequally-disposed, independency, envelope (ISO)

a': Symbols unique to ISO standards used in ASME-based datasets

b. Unnecessary modifier for Datum Feature reference - tangent plane

c. Quantity Error - “X places” not specified where needed

d. Untoleranced feature / missing tolerances

e. Unnecessary modifier for Datum Feature reference - RFS

f. Incorrect format - leading and trailing zero usage - Incorrect number of decimal places (related to units)

g. Duplicate Datum Feature Reference – datum feature referenced twice in a feature control frame

h. Runout applied to control size - this application is not defined in ASME or ISO. Runout may be used to control a basically dimensioned feature if its size is controlled a profile of a surface tolerance; or, runout may be used to control a feature of size whose size is controlled by a directly toleranced dimension (±) as shown.

i. Disallowed modifier for Datum Feature reference - MMC (MMB) or LMC (LMB) for concentricity or symmetry (1994 & 2009), circular runout and total runout (2009)

j. Projection modifier for Datum Feature reference - not defined

k. Flatness attached to a dimension without a center plane
Note - corrected k Flatness tolerance moved and attached to .080 ±.002 keyway dimension and tolerance.

© Copyright Advanced Dimensional Management LLC – 2010 – All Rights Reserved – Unrestricted rights granted to NIST, BAE Systems, and ITI Transcendata

Errors

1. DIMENSIONING AND TOLERANCING PER ASME Y14.5-2009
2. UNITS: INCHES

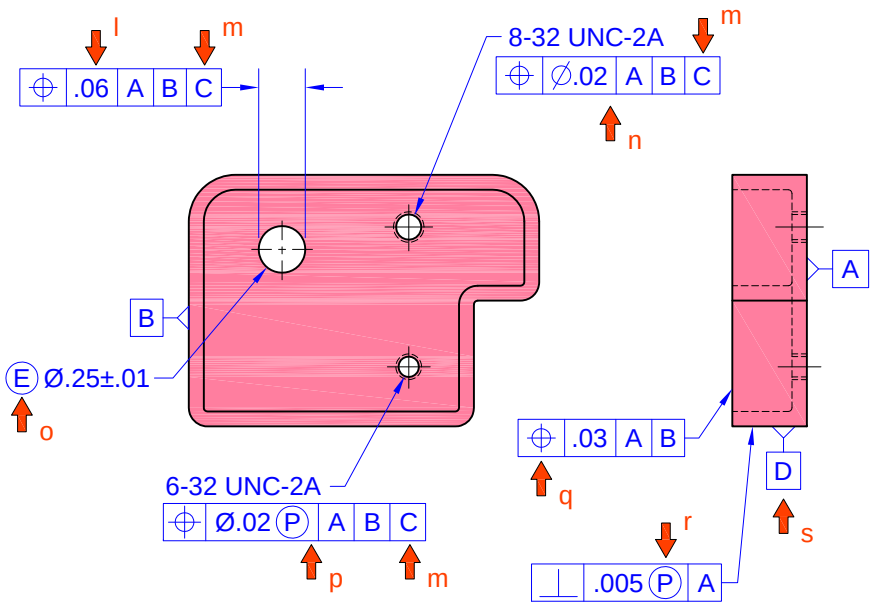

Figure 6-2
PMI Errors: Datum Target and Target Leader Errors

Correct Specifications

1. DIMENSIONING AND TOLERANCING PER ASME Y14.5-2009
2. UNITS: INCHES

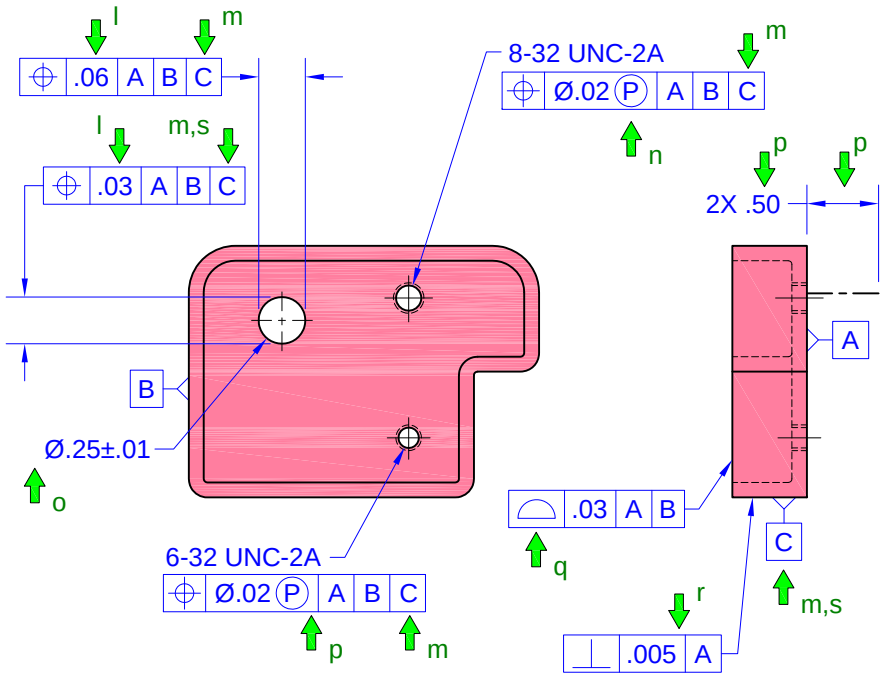

Figure 6-2
Correct Specifications

l. Single direction-dependent positional tolerance for cylindrical feature. Note: corrected version includes two mutually-perpendicular bi-directional positional tolerances.

m. Unspecified Datum Feature – datum feature referenced in feature control frame is undefined

n. Projected tolerance zone not specified for a threaded hole

o. Symbols unique to ISO standards used in ASME-based datasets

p. Projected tolerance zone length not specified

q. ISO Tolerance application carried over into ASME-based dataset

r. Projected tolerance zone on non-projectable feature

s. Unreferenced Datum Feature – datum feature identified and labeled but not referenced in a feature control frame

© Copyright Advanced Dimensional Management LLC – 2010 – All Rights Reserved – Unrestricted rights granted to NIST, BAE Systems, and ITI Transcendata

Errors

1. DIMENSIONING AND TOLERANCING PER ASME Y14.5-2009
2. UNITS: INCHES

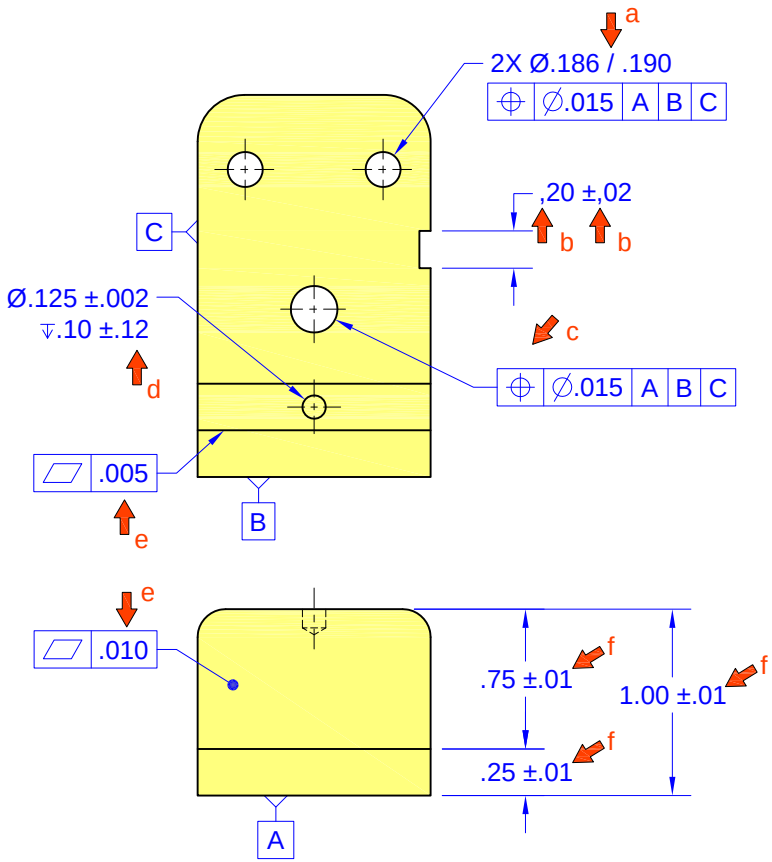

Figure 7-1
PMI Errors: Various Dimensioning and Tolerancing Errors

Correct Specifications

1. DIMENSIONING AND TOLERANCING PER ASME Y14.5-2009
2. UNITS: INCHES

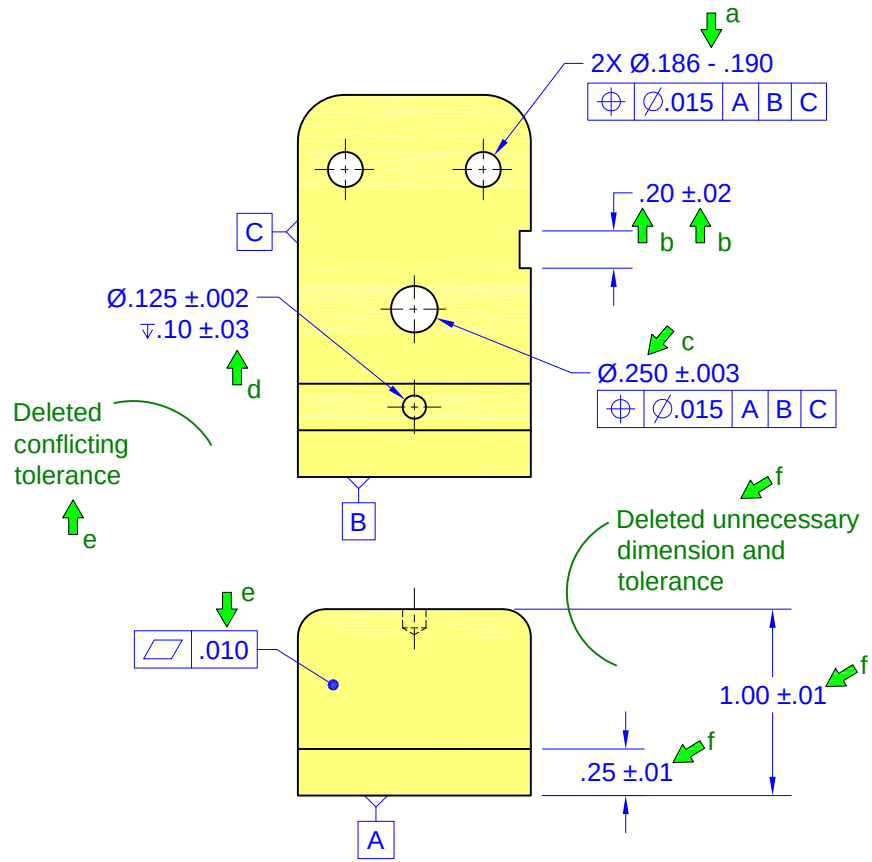

Figure 7-1
Correct Specifications

a. Incorrect format - Incorrect delimiter for limit dimensions (delimiter should be a dash)

b. Incorrect format - Incorrect delimiters (related to unit system, ISO vs. ASME. ASME uses a decimal point, ISO uses a comma.)

c. Missing size dimension and tolerance for feature of size

d. Tolerance Magnitude - Depth tolerance value larger than depth dimension

e. Double Tolerancing Errors – Conflicting redundant tolerances applied to a feature

f. Tolerance Stackup Error – accumulation of multiple tolerances conflicts with single tolerance value

© Copyright Advanced Dimensional Management LLC – 2010 – All Rights Reserved – Unrestricted rights granted to NIST, BAE Systems, and ITI Transcendata

Errors

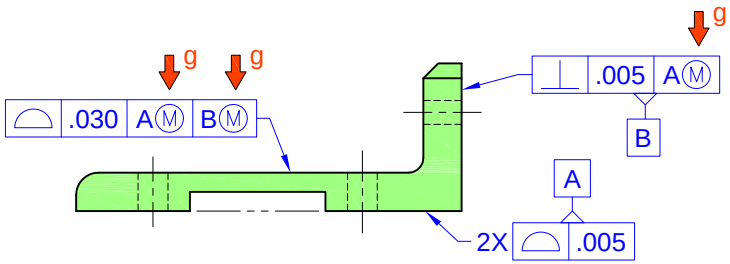

Figure 7-2
PMI Errors: Material Boundary Modifier Errors

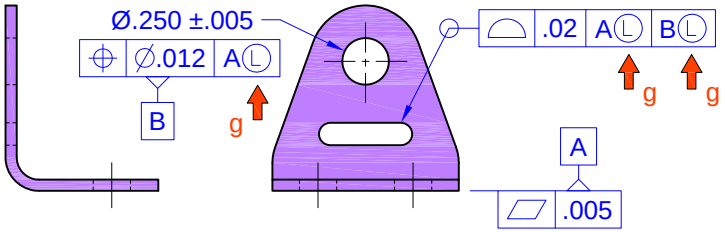

Figure 7-3
PMI Errors: Material Boundary Modifier Errors

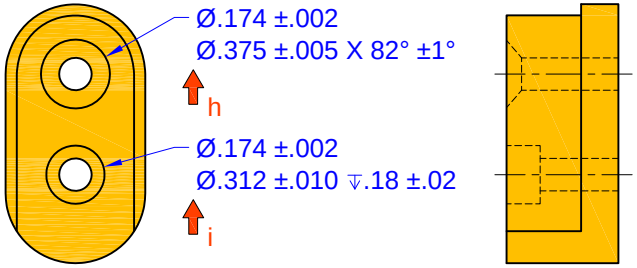

Figure 7-4
PMI Errors: Missing Counterbore and Countersink Symbol Errors

Correct Specifications

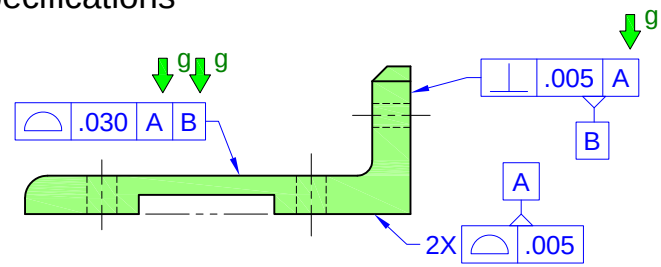

Figure 7-2
Correct Specifications

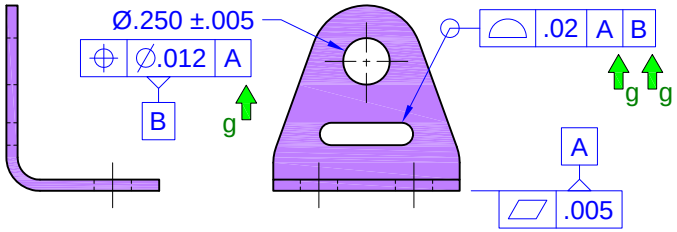

Figure 7-3
Correct Specifications

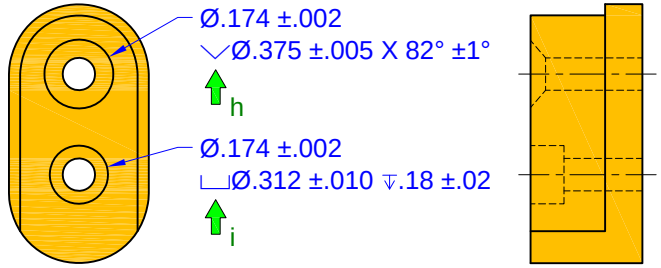

Figure 7-4
Correct Specifications

g. Material Boundary Modifier Error (ASME Y4.5-2009) - These datum features do not have Least Material and Maximum Material Boundaries

h. Missing Countersink Symbol Error - The symbol is required because the feature definition is specified as part of a directly toleranced dimension set

i. Missing Counterbore Symbol Error - The symbol is required because the feature definition is specified as part of a directly toleranced dimension set

© Copyright Advanced Dimensional Management LLC – 2010 – All Rights Reserved – Unrestricted rights granted to NIST, BAE Systems, and ITI Transcendata

Errors

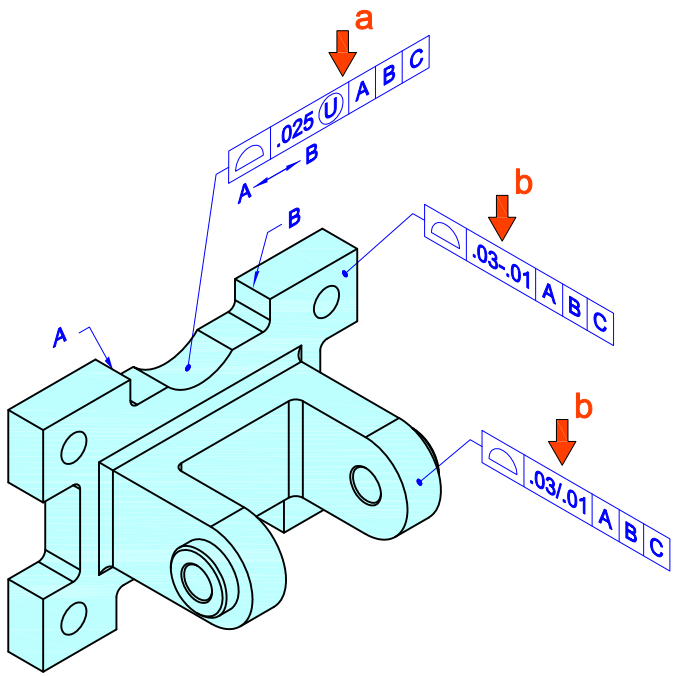

Figure 8-1
PMI Errors: Various Model-Based Dimensioning and Tolerancing Errors

Correct Specifications

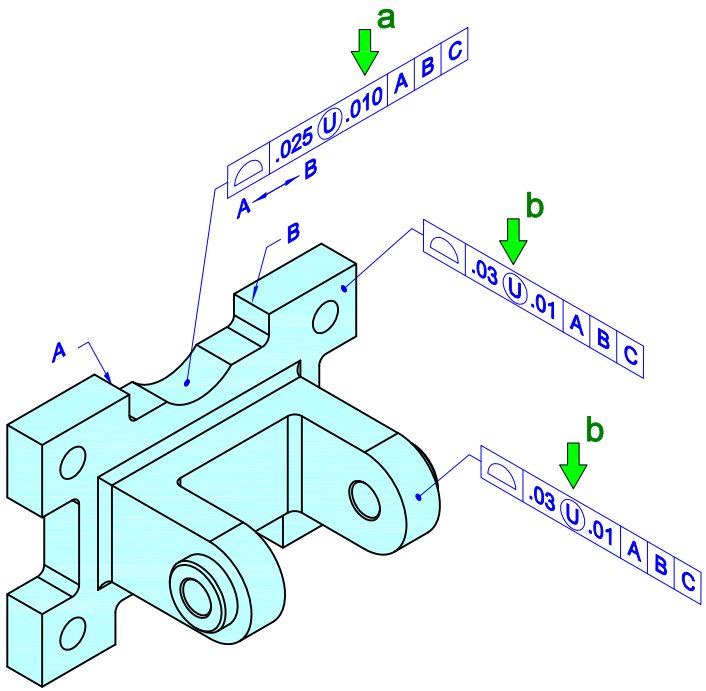

Figure 8-1
Correct Specifications

a. Missing Unequally-Disposed Profile MMB Value Error - Value offset toward MMB not specified after modifier

b. Improper Unequally-Disposed Modifier Error - Different symbol or delimiter used to indicate unequal-bilateral and unilateral profile tolerances

PMI Errors 8a

© Copyright Advanced Dimensional Management LLC – 2010 – All Rights Reserved – Unrestricted rights granted to NIST, BAE Systems, and ITI Transcendata

Errors

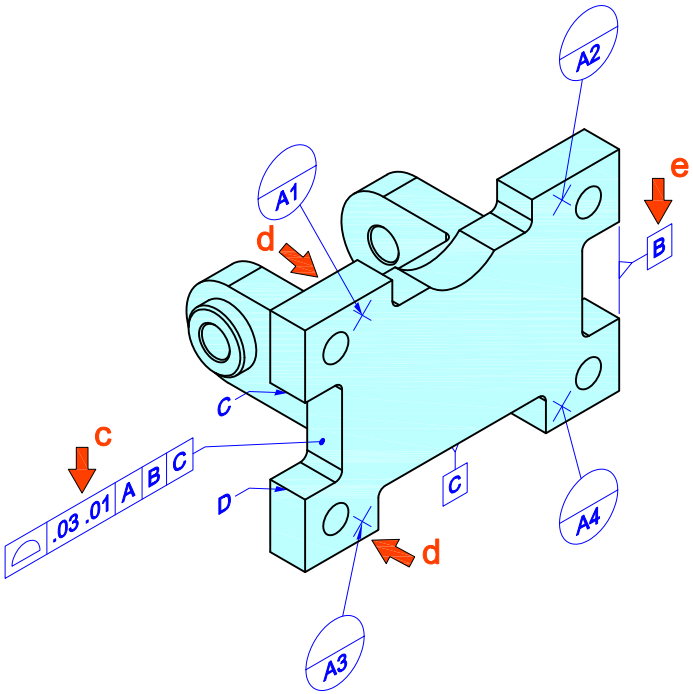

Figure 8-2
PMI Errors: Various Model-Based Dimensioning and Tolerancing Errors

Correct Specifications

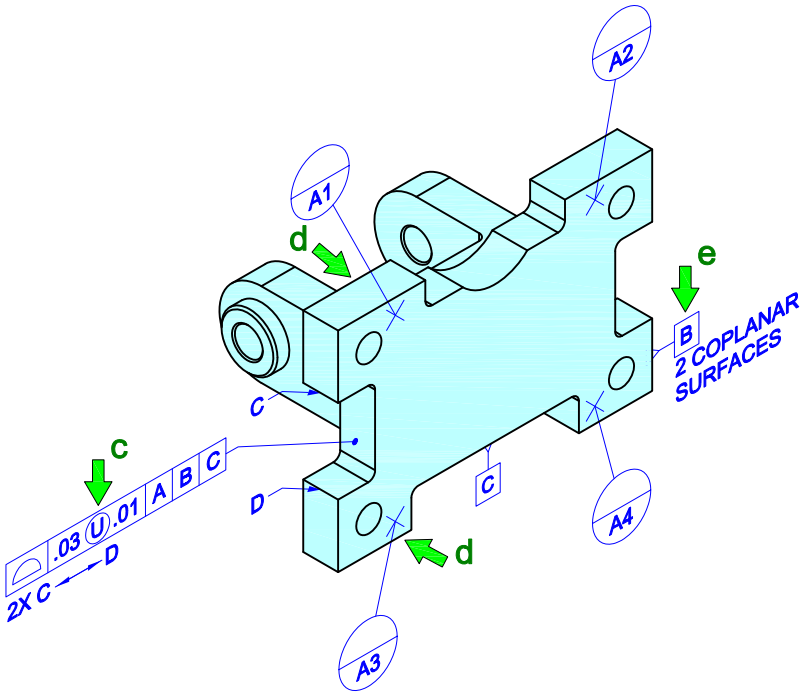

Figure 8-2
Correct Specifications

c. Missing Unequally-Disposed Modifier Error - Modifier not specified with unequal-bilateral and unilateral profile tolerances

d. Datum Target Leader Terminator Error - no terminator required for Datum Target leaders

e. Datum Feature Attachment Error - Datum feature attached to a single extension line from a feature outline

© Copyright Advanced Dimensional Management LLC – 2010 – All Rights Reserved – Unrestricted rights granted to NIST, BAE Systems, and ITI Transcendata

Errors

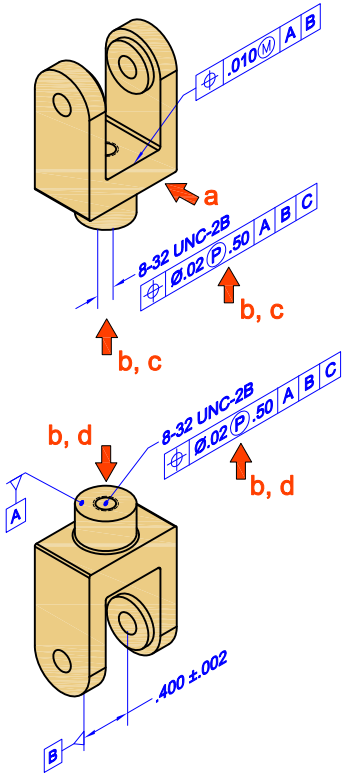

Figure 9-1
PMI Errors: Various Model-Based Dimensioning and Tolerancing Errors

Correct Specifications

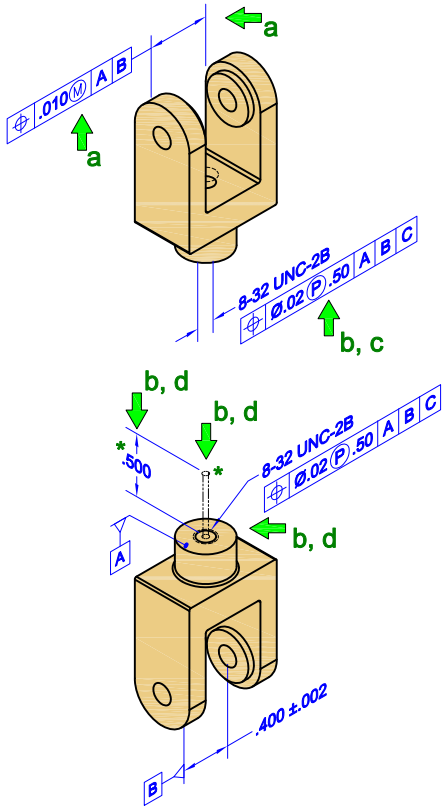

Figure 9-1
Correct Specifications

a. Leader directed to center plane (not modeled or shown) rather than to surface of width (stepped)

b. Projected tolerance zone on threaded through hole without projection direction indication

c. Projected Tolerance Zone Attachment Error - Projected tolerance directed to feature using a method besides leader directed tolerance

d. Projected Tolerance Zone Attachment Error - Projected tolerance specification not attached to end of feature

* The method shown using a modeled phantom cylinder with a dimension indicating the projection length is not in ASME Y14.41-2003. This method is defined in my material in the IHS Global "Drawing Requirements Manual - 11th Edition" - this method of indicating the projection direction is superior to the method in ASME Y14.41-2003.

© Copyright Advanced Dimensional Management LLC – 2010 – All Rights Reserved – Unrestricted rights granted to NIST, BAE Systems, and ITI Transcendata

Errors

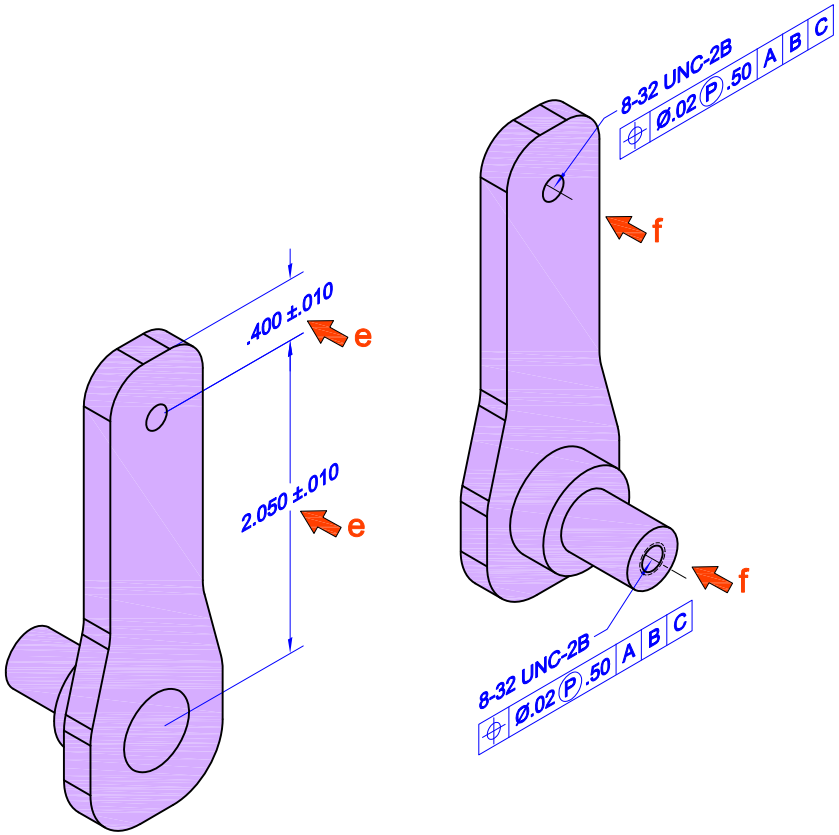

Figure 9-2
PMI Errors: Various Model-Based Dimensioning and Tolerancing Errors

Correct Specifications

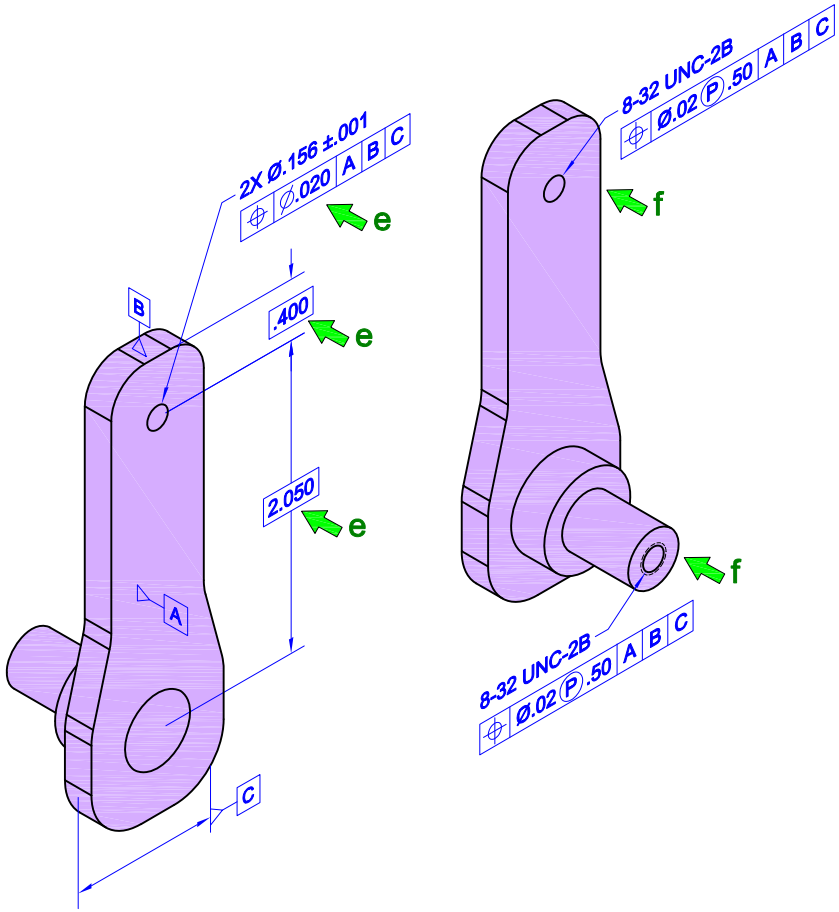

Figure 9-2
Correct Specifications

e. Dimension Application Error – Directly Toleranced Dimension used to define the orientation and/or location between features

f. Leader directed to center line (axis) rather than surface of hole or pin (stepped)

PMI Errors 9b

© Copyright Advanced Dimensional Management LLC – 2010 – All Rights Reserved – Unrestricted rights granted to NIST, BAE Systems, and ITI Transcendata

Error Matrix and Cross-Reference: PMI Errors and Violations from a Quality Perspective

Part of the
"Validating a Certified Technical Data Package for the Model-Based Enterprise Project" for BAE/NIST

July 12, 2010

Revision C.1

Client Confidential

Prepared for: ITI TranscenData

Prepared by: Bryan R. Fischer – Advanced Dimensional Management LLC – 2010

© Advanced Dimensional Management LLC – All Rights Reserved – Unrestricted rights granted to NIST, BAE, ITI TranscenData

PMI Quality Validation

Item	Description	Figure / Item(s)	Fig Needed?	Rep	Pres	2D / 3D / Both	Testable?	Ambiguity	Associativity	Attachment	Best Practice	Confusing	Definition	Display	Extraneous	Format	Incomplete	Magnitude	Misapplication	Quantity	Redundancy	Std Version	Type Error	Undefined in stds	Notes
1	Leader directed orientation tolerance without diameter symbol for cylindrical feature	Figure 3-4 / p	y				y	x		x			x				x		x				x	x	
2	Leader directed position without diameter symbol for cylindrical feature	Figure 2-3 / 3	y				y	x		x			x				x		x				x	x	
3	Leader directed position without spherical diameter symbol for spherical feature	Figure 2-4 / 4	y				y	x		x			x				x		x				x	x	
4	Disallowed leader line type (hidden)	Figure 3-1 / a	y				y	x				x	x			x			x					x	
5	Inappropriate leader line type (center, phantom, dotted, etc.)	Figure 3-2 / h	y				y	x				x	x			x			x					x	
6	Single direction-dependent positional tolerance for cylindrical feature	Figure 6-2 / l (ell)	y				y	x			x						x		x				x	x	
7	Tolerance Application Error - Inappropriate orientation tolerance (Perpendicularity) applied where a different tolerance should be specified (Angularity)	Figure 2-6 / g	y				m					x	x						x				x		
8	Projected tolerance zone not specified for a threaded hole	Figure 6-2 / n	y				y	x			x								x						
9	Projected tolerance zone on threaded through hole without projection direction indication	Figure 9-1 / b	y				y	x		x		x	x	x			x		x						
10	Projected tolerance zone length not specified	Figure 6-2 / p	y				y	x				x					x	x	x						
11	Lack of association to digital elements		n				y	x	x	x		x	x		x		x								Logical problem, only visible during query as cross-highlighting error
12	Edited text within a PMI string		n				m				x														Indicated differently within different CAD systems.
13	PMI associated to the wrong digital elements		n				m		x	x		x		x					x						Logical problem, only visible during query as cross-highlighting error
14	Violation of Associativity rules in ASME Y14.41-2003		n				y	x	x			x													Logical problem
15	Violation of Associativity best practices		n				y	x	x		x	x													Logical problem
16	Directly toleranced dimension not associated to toleranced feature(s)		n				y		x	x		x			x										Logical problem, only visible during query as cross-highlighting error

© Advanced Dimensional Management LLC – All Rights Reserved – Unrestricted rights granted to NIST, BAE, ITI TranscenData

PMI Quality Validation

Item	Description	Figure / Item(s)	Fig Needed?	Rep	Pres	2D / 3D / Both	Testable?	Ambiguity	Associativity	Attachment	Best Practice	Confusing	Definition	Display	Extraneous	Format	Incomplete	Magnitude	Misapplication	Quantity	Redundancy	Std Version	Type Error	Undefined in stds	Notes
17	Geometric tolerance not associated to toleranced feature(s)		n				y		x	x		x			x										Logical problem, only visible during query as cross-highlighting error
18	Set (pattern) of features controlled by an explicitly-specified geometric tolerance not associated (as a group)		n				y		x			x													Logical problem, only visible during query as cross-highlighting error
19	Violation of Attachment rules in ASME Y14.41-2003, ISO 16792:2006, and/or MIL-STD-31000	Figure 4-1 / a,f	y				y	x		x		x													
20	Violation of Attachment best practices	Figure 4-1 / a,c,f Figure 5-1 / d,e	y				y	x		x	x	x													
21	Flatness attached to a dimension without a center plane	Figure 6-1 / k	y				m			x		x							x				x	x	
22	Leader directed to edge rather than surface	Figure 5-1 / d	y				y	x		x	x	x													
23	Leader directed to center line (axis) rather than surface of hole or pin (stepped)	Figure 9-2 / f	y				y	x		x	x	x							x					x	
24	Leader directed to center plane rather than surface of width (stepped)	Figure 9-1 / a	y				y	x		x	x	x							x					x	
25	Feature of Size Dimension Attachment Error - Dimension attached to/directed to a Feature of Size incorrectly	Figure 4-1 / c	y				y	x		x	x	x							x					x	
26	Geometric tolerance associated with/attached to basic dimension	Figure 5-1 / e Figure 5-2 / g	y				y	x	x	x	x	x							x				x	x	
27	Projected Tolerance Zone Attachment Error - Projected tolerance specification not attached to end of feature	Figure 9-1 / d	y				y	x		x	x	x							x					x	
28	Projected Tolerance Zone Attachment Error - Projected tolerance directed to the feature using a method besides leader directed tolerance	Figure 9-1 / c	y				y	x		x	x	x	x						x				x	x	
29	Inappropriate Letters Used to Specify Datum Features	Figure 3-3 / k	y				y						x						x					x	
30	Inappropriate Symbol Used in Datum Feature Symbol	Figure 2-4 / 5 Figure 2-5 / 7,8	y				y				x		x		x				x				x	x	
31	Inappropriate Letters Used to Reference Datum Features	Figure 3-3 / l (ell)	y				y						x						x					x	

© Advanced Dimensional Management LLC – All Rights Reserved – Unrestricted rights granted to NIST, BAE, ITI TranscenData

PMI Quality Validation

Item	Description	Figure / Item(s)	Fig Needed?	Rep	Pres	2D / 3D / Both	Testable?	Ambiguity	Associativity	Attachment	Best Practice	Confusing	Definition	Display	Extraneous	Format	Incomplete	Magnitude	Misapplication	Quantity	Redundancy	Std Version	Type Error	Undefined in stds	Notes
32	Inappropriately Labeled Datum Targets	Figure 3-1 / c,e	y				y	x			x	x	x	x		x	x								
33	Wrong Datum Feature symbol used (1982 symbol used in a 1994, 2009 dataset)	Figure 3-4 / o	y				y					x	x						x			x			
34	Datum Feature Symbol Geometry Error - Non-Standard or User-Built Datum Feature Symbol	Figure 3-4 / q	y				y					x	x						x					x	Not the correct symbol in the CAD system. User-defined symbol, built from scratch, or company-specific symbol.
35	Combined Datum Feature Symbol Error - Datum Feature Symbol from ANSI Y14.5M-1982 or Before Combined with Current Symbol	Figure 3-4 / r	y				y					x	x						x					x	
36	Incomplete Datum Feature symbol used: 1994, 2009 symbol - missing line, triangle, box, or letter	Figure 3-4 / n	y				y					x	x	x		x								x	
37	Incomplete Datum Target symbol content - missing target number	Figure 3-1 / e	y				y					x	x	x		x								x	
38	Incorrect Datum Target symbol content format - Datum target letter and number in wrong compartment	Figure 3-1/ c	y				y					x	x	x		x								x	
39	Unspecified Datum Feature – datum feature referenced in feature control frame is undefined	Figure 2-6 / c Figure 6-2 / m	y				y	x				x					x								
40	Unreferenced Datum Feature – datum feature identified and labeled but not referenced in a feature control frame	Figure 6-2 / s	y				y	x	x			x			x										
41	Duplicate Datum Feature Reference – datum feature referenced twice in a feature control frame	Figure 6-1 / g	y				y					x			x				x					x	
42	Unauthorized Datum Feature Reference – datum feature(s) referenced in a form tolerance feature control frame (not allowed)	Figure 2-6 / b	y				y					x	x						x				x	x	
43	Missing Datum Feature Reference – required datum feature(s) are not referenced in a feature control frame	Figure 2-6 / e	y				y					x					x								
44	Datum Feature Reference Type Error - Insufficient datum features referenced – inadequate degrees of freedom constrained	Figure 3-2 / g	y				m					x					x								

© Advanced Dimensional Management LLC – All Rights Reserved – Unrestricted rights granted to NIST, BAE, ITI TranscenData

PMI Quality Validation

Item	Description	Figure / Item(s)	Fig Needed?	Rep	Pres	2D / 3D / Both	Testable?	Ambiguity	Associativity	Attachment	Best Practice	Confusing	Definition	Display	Extraneous	Format	Incomplete	Magnitude	Misapplication	Quantity	Redundancy	Std Version	Type Error	Undefined in stds	Notes
45	Datum Feature Reference Type Error - Wrong type of datum feature referenced	Figure 3-2 / f	y				m					x							x				x		
46	Self-Referential Datum Feature Reference – tolerance applied to a datum feature that references that feature's datum	Figure 2-6 / h Figure 5-1 / c	y				y				x	x	x						x					x	
47	Projection modifier for Datum Feature reference - not defined	Figure 6-1 / j	y				y					x	x						x				x	x	
48	Unnecessary modifier for Datum Feature reference - RFS	Figure 6-1 / e	y				y					x			x				x			x			
49	Unnecessary modifier for Datum Feature reference - tangent plane	Figure 6-1 / b	y				y					x							x				x		
50	Inapplicable modifier for Datum Feature reference - unequally-disposed, independency, envelope (ISO)	Figure 6-1 / a	y				y	x				x							x				x	x	
51	Disallowed modifier for Datum Feature reference - MMC (MMB) or LMC (LMB) for concentricity or symmetry (1994 & 2009), circular runout and total runout (2009)	Figure 6-1 / i	y				y	x				x	x						x				x		
52	Inappropriate modifier for Datum Feature reference - violation of best practice MMC or LMC for circular runout and total runout (1994)		n				y	x				x	x						x				x		Similar to disallowed MMC/MMB, LMC/LMB modifier reference for concentricity or symmetry, etc.
53	Datum reference frame not associated to a Model Coordinate System		n				y	x	x			x													Logical problem, only visible during query as cross-highlighting error
54	Datum reference frame not associated to a unique model coordinate system		n				y	x	x		x	x													Logical problem, only visible during query as cross-highlighting error
55	Movable datum target symbol used on model that references ASME Y14.5M-1994 but not ASME Y14.8	Figure 3-1 / d	y				y					x	x									x		x	
56	Inappropriate origin or terminus of a dimension - Dimension to or from the edge of a cylindrical feature (hole or shaft)	Figure 1-3 / n	y				y	x		x	x	x	x						x					x	
57	Inappropriate origin or terminus of a dimension - Dimension to or from the edge of a spherical feature of size	Figure 1-3 / o	y				y	x		x	x	x	x						x					x	

© Advanced Dimensional Management LLC – All Rights Reserved – Unrestricted rights granted to NIST, BAE, ITI TranscenData

PMI Quality Validation

Item	Description	Figure / Item(s)	Fig Needed?	Rep	Pres	2D / 3D / Both	Testable?	Ambiguity	Associativity	Attachment	Best Practice	Confusing	Definition	Display	Extraneous	Format	Incomplete	Magnitude	Misapplication	Quantity	Redundancy	Std Version	Type Error	Undefined in stds	Notes
58	Inappropriate origin or terminus of a dimension - Dimension to or from the edge of a countersink or conical surface		n				y	x		x	x	x	x						x					x	Similar to other dimension origin and terminus errors
59	Inappropriate origin or terminus of a dimension - Dimension to or from the edge of the tangent point of a radius	Figure 5-1 / a	y				y	x		x	x	x	x						x					x	
60	Dimension origin symbol used with a basic dimension	Figure 5-2 / h	y				y									x			x					x	
61	Security marking display violation per ASME Y14.41		n				y							x											Security Marking is not on correct annotation plane and/or does not display properly
62	Security marking display violation per MIL-STD-31000		n				y							x											Security Marking is not on correct annotation plane and/or does not display properly
63	Annotation scrambled		n	x	x		y	m				x		x											Obvious - no figure needed
64	Reading direction violation - Upside Down		n				y	x				x		x											Obvious - no figure needed
65	Reading direction violation - Backward		n				y	x				x		x											Obvious - no figure needed
66	Annotation obscured by model in saved view		n				m	x				x		x											Obvious - no figure needed
67	Annotation obscured by other annotation in saved view		n				m	x				x		x											Obvious - no figure needed
68	Annotation missing in saved view		n				m	x				x					x								Annotation that should be in saved view does not display in view
69	Annotation associated with wrong saved view		n				m	x	x			x		x			x								Annotation that should be in saved view displays in another view
70	Annotation on static annotation plane that should rotate with the model		n				m	x		x		x		x											Local annotation should be associated to and rotate with local geometry
71	Incorrect format - leading and trailing zero usage - Incorrect number of decimal places (related to units)	Figure 6-1 / f	y				y					x				x									
72	Incorrect format - Incorrect delimiters (related to unit system, ISO vs. ASME)	Figure 7-1 / b	y				y					x				x									Commas vs. periods
73	Tolerance Magnitude - Size tolerance value larger than size dimension	Figure 1-3 / j	y				y				x	x						x	x						

© Advanced Dimensional Management LLC – All Rights Reserved – Unrestricted rights granted to NIST, BAE, ITI TranscenData

PMI Quality Validation

Item	Description	Figure / Item(s)	Fig Needed?	Rep	Pres	2D / 3D / Both	Testable?	Ambiguity	Associativity	Attachment	Best Practice	Confusing	Definition	Display	Extraneous	Format	Incomplete	Magnitude	Misapplication	Quantity	Redundancy	Std Version	Type Error	Undefined in stds	Notes
74	Incorrect format - Incorrect delimiter for limit dimensions	Figure 7-1 / a	y				y					x				x									slash versus dash…
75	Tolerance Magnitude - Depth tolerance value larger than depth dimension	Figure 7-1 / d	y				y				x	x						x	x						Similar to other tolerance magnitude error
76	Virtual Condition calculation errors		n				m				x	x						x	x						These are design and dimensioning and tolerancing errors that could be calculated; probably too complex to do reliably because fastener and/or mating part information is needed
77	Untoleranced feature / missing tolerances	Figure 1-2 / d Figure 6-1 / d					m	x				x					x								
78	Feature without any specified tolerances		n				y	x				x					x								Obvious - no figure needed
79	Incompletely toleranced feature		n				m					x					x								Form, size, orientation, or location not toleranced as applicable
80	Missing size dimension and tolerance for feature of size	Figure 7-1 / c					y					x					x								
81	Dimension value significantly different than model value		n				y					x	x					x							Likely from edited text - non-associative dimension value
82	Quantity Error - “X places” not specified where needed	Figure 6-1 / c	y				m	y				x	x				x			x					
83	Quantity Error - “X places” does not correspond to applicable number of features	Figure 1-2 / e Figure 1-3 / m	y				m					x								x					
84	Projected tolerance zone on non-projectable feature	Figure 6-2 / r	y				y	x				x							x				x		
85	Redundancy - Multiple instances of same PMI associated to a feature	Figure 3-1 / b	y				y				x	x									x				
86	Symbols used from the wrong version of ASME Y14.5 in dataset	Figure 3-4 / o	y				y					x										x			
87	Symbols unique to ISO standards used in ASME-based datasets	Figure 6-1 / a' Figure 6-2 / o	y				y					x	x						x			x			
88	ISO Tolerance application carried over into ASME-based dataset	Figure 6-2 / q	y				y					x	x			x			x			x			
89	Industry-specific symbols used without proper standard reference in TDP		n				m					x	x			x						x			Too varied to show in a figure
90	Company-specific symbols used without proper standard reference in TDP		n				m					x	x			x						x			Too varied to show in a figure

© Advanced Dimensional Management LLC – All Rights Reserved – Unrestricted rights granted to NIST, BAE, ITI TranscenData

PMI Quality Validation

Item	Description	Figure / Item(s)	Fig Needed?	Rep	Pres	2D / 3D / Both	Testable?	Ambiguity	Associativity	Attachment	Best Practice	Confusing	Definition	Display	Extraneous	Format	Incomplete	Magnitude	Misapplication	Quantity	Redundancy	Std Version	Type Error	Undefined in stds	Notes
91	Double Tolerancing Errors (conflicting redundant tolerances)	Figure 7-1 / e	y				m				x	x			x			x	x		x				
92	Tolerance Stackup error – accumulation of multiple tolerances conflicts with single tolerance value	Figure 7-1 / f	y				m				x	x			x			x	x		x				
93	Missing R, CR, CSR symbol on radial feature dimension	Figure 1-2 / b	y				y	x				x	x				x						x		
94	R, CR, SR, CSR, Ø, or SØ applied to inappropriate feature dimension	Figure 1-2 / f Figure 1-3 p	y				y	x				x	x				x						x		
95	Missing Ø symbol on round feature dimension	Figure 1-1 / 1 Figure 1-2 / i	y				y	x				x	x				x						x		
96	Missing SØ symbol on spherical feature dimension	Figure 1-2 / c, h	y				y	x				x	x				x						x		
97	Inappropriate shape symbol – Countersink, counterbore, depth, etc. symbols used where they shouldn't be used or applied to wrong feature types	Figure 1-3 / l (ell)	y				y	x				x	x						x				x		
98	Missing Countersink, counterbore, depth etc. symbols where they are needed	Figure 7-4 / h,i	y				y	x				x					x								
99	Dimension Type Application Error – Directly-toleranced dimension used where a basic dimension should be used – to locate or orient features (ASME Y14.41 and best practice)	Figure 1-2 / a,g Figure 3-2 / i	y				m	x			x	x	x						x				x		
100	Basic dimension frame drawn around directly toleranced dimension	Figure 1-3 / k	y				y	x				x	x			x			x				x		
101	Tolerance Application Error – geometric tolerance applied to wrong feature type	Figure 2-6 / a	y				m	x				x	x						x				x		
102	Runout applied to also control size	Figure 6-1 / h	y				m	x				x	x				x						x		Size tolerance for sphere unspecified
103	True Profile Definition Error 1 – Form/(size) controlling profile applied to surface defined using directly toleranced dimension		n				y	x			x	x	x						x				x		Similar to Form/(size)/ orientation/location error example
104	True Profile Definition Error 2 – Form/(size)/orientation controlling profile applied to surface defined using +/- and oriented using directly toleranced dimension		n				y	x			x	x	x						x				x		Similar to Form/(size)/ orientation/location error example

© Advanced Dimensional Management LLC – All Rights Reserved – Unrestricted rights granted to NIST, BAE, ITI TranscenData

PMI Quality Validation

Item	Description	Figure / Item(s)	Fig Needed?	Rep	Pres	2D / 3D / Both	Testable?	Ambiguity	Associativity	Attachment	Best Practice	Confusing	Definition	Display	Extraneous	Format	Incomplete	Magnitude	Misapplication	Quantity	Redundancy	Std Version	Type Error	Undefined in stds	Notes
105	True Profile Definition Error 3 – Form/(size)/orientation/location controlling profile applied to surface defined using +/- and oriented/located using directly toleranced dimension	Figure 3-2 / j	y				y	x			x	x	x						x				x		
106	Concentricity used inappropriately		n				n	x			x	x							x				x		Generally concentricity and symmetry should not be used in datasets per ASME Y14.5 (tolerance controls the wrong geometry)
107	Symmetry used inappropriately		n				n	x			x	x							x				x		Generally concentricity and symmetry should not be used in datasets per ASME Y14.5 (tolerance controls the wrong geometry)
108	Geometric Tolerance Zone Shape Errors - Inapplicable Symbol	Figure 2-2 / 2 Figure 2-5 / 6 Figure 2-6 / d Figure 4-1 / e	y				y	x				x							x				x	x	
109	Geometric Tolerance Zone Shape Errors - Disallowed Symbol	Figure 2-1 / 1	y				y	x				x							x				x	x	
110	Geometric Tolerance Zone Shape Errors - Missing Symbol	Figure 2-3 / 3 Figure 2-4 / 4	y				m	x				x							x				x	x	
111	Material Condition Modifier Error: Material Condition Modifier applied to a feature without size.	Figure 2-6 / f	y				y	x				x	x						x				x	x	
112	Material Boundary Modifier Error (ASME Y4.5-2009)	Figure 7-2 / g Figure 7-3 / g	y				y	x				x	x						x				x	x	All features have an MMB and LMB except flat primary and certain flat secondary Datum Features that are not toleranced to other datum reference frames
113	Tolerance shown in saved view for geometry not shown in view		n				m	x				x		x											Logical problem
114	Tolerance shown in section view for geometry not shown in view		n				m	x				x		x											Logical problem
115	Arrowhead / Terminus Error - Leader Line	Figure 4-1 / a,d,f	y																						
116	Direction Dependent Tolerance Errors - missing supplemental geometry indicating direction	Figure 4-1 / b	y				y	x	x	x		x					x								

© Advanced Dimensional Management LLC – All Rights Reserved – Unrestricted rights granted to NIST, BAE, ITI TranscenData

PMI Quality Validation

Item	Description	Figure / Item(s)	Fig Needed?	Rep	Pres	2D / 3D / Both	Testable?	Ambiguity	Associativity	Attachment	Best Practice	Confusing	Definition	Display	Extraneous	Format	Incomplete	Magnitude	Misapplication	Quantity	Redundancy	Std Version	Type Error	Undefined in stds	Notes
117	Direction Dependent Tolerance Errors - not associated to a model coordinate system vector indicating direction	Figure 4-1 / b	y				y	x	x			x					x								Logical Error - It is not possible to show missing association in the figure
118	Disallowed KEYWORD Error - TRUE	Figure 5-1 / b	y																						
119	Tolerance Extents Error - the extents the tolerance applies are unclear	Figure 5-1 / f	y																						
120	Model Coordinate System Error - Model Coordinate System Missing from Saved View	Figure 5-2 / i	y																						
121	Datum Target Leader Terminator Error - no terminator required for Datum Target leaders	Figure 8-2 / d	y				y				x					x							x		
122	Dimension Application Error – Directly Toleranced Dimension used to define the orientation and/or location between features	Figure 1-2 / a,g Figure 1-3 / ,j,o Figure 9-2 / e	y				m	x			x	x							x				x		
123	Datum Feature Symbol Attachment Error - Symbol attached to a single extension line from a feature outline	Figure 8-2 / e	y				y	x		x	x	x							x						
124	Datum Feature Symbol Attachment Error - Symbol attached to a corner or edge	Figure 3-4 / m	y				y	x		x	x	x							x						
125	Missing Unequally-Disposed Modifier Error: Modifier not specified with Unequal-bilateral and unilateral profile tolerances	Figure 8-2 / c	y				m	x				x					x		x						
126	Improper Unequally-Disposed Modifier Error: Different symbol or delimiter used to indicate unequal-bilateral and unilateral profile tolerances	Figure 8-1 / b	y				m	x				x					x		x						
127	Missing Unequally-Disposed Profile MMB Value Error - Value offset toward MMB not specified after modifier	Figure 8-1 / a	y				y	x				x					x		x						

© Advanced Dimensional Management LLC – All Rights Reserved – Unrestricted rights granted to NIST, BAE, ITI TranscenData

PMI Errors and Violations from a Quality Perspective – PMI Errors 1 A. Ohtaka, 2010-09-13

		a. 形状（形体)そのものが満たすべき要件(ex. Featuringされていなければならない、	b. GD&T情報表現に関する要件	c.形体とGD&T情報の関係に関する要件	d.表記に対する要件	メモ
1	Type Errors: Missing Diameter Symbol in Size Dimension	円筒とFeaturingされていること	寸法要素がまとまっていること。	引き出し線や寸法補助線が円筒Featureと関係付けられていること。	適切な寸法記号が付与されていること（この場合直径記号）。(**)	
a	Directly toleranced dimension use error	Featuring	寸法要素がまとまっていること。	引き出し線や寸法補助線が円筒Featureと関係付けられていること。	理論的に正確な寸法（枠つき／基準寸法）でなければならない。(**)	枠つきでないと円頭部分の位置が決まらないことは事実だが、基準寸法にすべき根
b	Missing R or CR	Featuring	寸法要素がまとまっていること。	引き出し線や寸法補助線が円筒Featureと関係付けられていること。	Teature Typeに合ったR or CRを寸法の先頭につける。(**)	
c	Missing S in Spherical dimension	Featuring	寸法要素がまとまっていること。	引き出し線や寸法補助線が円筒Featureと関係付けられていること。	球面寸法には先頭にSの付与が必要。(**)	
d	Missing tolerance for directly toleranced dimension	Featuring	寸法要素がまとまっていること。	引き出し線や寸法補助線が円筒Featureと関係付けられていること。	枠つきの基準寸法でないので公差の付与必要。(**)	
e	Erroneous nX quanlity specification	Featuring	寸法要素がまとまっていること。	引き出し線や寸法補助線が円筒Featureと関係付けられていること。	同一featureを数え上げその個数を先頭に付与要。(**)	
f	Inappropriate diameter symbol used for width feature dimension	Featuring	寸法要素がまとまっていること。	引き出し線や寸法補助線が円筒Featureと関係付けられていること。	幅featureの寸法なのに直径寸法標記されている。(**)	
g	Directly toleranced dimension used where a basic dimension should be used.	Featuring	寸法要素がまとまっていること。	引き出し線や寸法補助線が円筒Featureと関係付けられていること。	aと同じ。	See a
h	Missing Sϕ symbol for spherical feature dimension	Featuring	寸法要素がまとまっていること。	引き出し線や寸法補助線が円筒Featureと関係付けられていること。	先頭にSϕを付与すべき。(**)	
i	Missing ϕ symbol for cylindrical feature dimension	Featuring	寸法要素がまとまっていること。	引き出し線や寸法補助線が円筒Featureと関係付けられていること。	先頭にϕを付与すべき。(**)	
j	Tolerance value is greater than the dimension value	Featuring	寸法要素がまとまっていること。	引き出し線や寸法補助線が円筒Featureと関係付けられていること。	公差値が寸法値を超えている誤りの訂正。(**)	
k	Frame shown around directly toleranced dimension	Featuring	寸法要素がまとまっていること。	引き出し線や寸法補助線が円筒Featureと関係付けられていること。	Frameの使い方の間違い。(**)	
l	on feature that is not a counterbore	Featuring	寸法要素がまとまっていること。	引き出し線や寸法補助線が円筒Featureと関係付けられていること。	Counterbore記号がcylindrical featurについていること。(**)	
m	Dimension to or from the edge of a cylindrical feature	Featuring	寸法要素がまとまっていること。	引き出し線や寸法補助線が円筒Featureと関係付けられていること。	"nX"の個数の誤り。(**)	
n	Dimension to or from the edge of a cylindrical feature	Featuring	寸法要素がまとまっていること。	引き出し線や寸法補助線が円筒Featureと関係付けられていること。	円筒の縁から公差付きで計測している寸法訂正。(**)	訂正案に書かれている基準寸法である必然性？
o	Directly toleranced dimension to or from a typcally inap fea	Featuring	寸法要素がまとまっていること。	引き出し線や寸法補助線が円筒Featureと関係付けられていること。	計測に不適な球面の縁からの計測の訂正。(**)	
p	Inappropriate Sϕ symbol for cylindrical feature dimension	Featuring	寸法要素がまとまっていること。	引き出し線や寸法補助線が円筒Featureと関係付けられ	記号の誤りの訂正。(**)	

		a. 形状(形体)そのものが満たすべき要件(ex. Featuring されていなければならない、	b. GD&T情報表現に関する要件	c.形体とGD&T情報の関係に関する要件	d.表記に対する要件	メモ
1	Geometric Tolerance Zone Shape Error – Geometric Tolerance Specified with a Radius Symbol R		●位置公差の公差域に半径寸法R(正解はØ)			
2	Geometric Tolerance Zone Shape Error – Spherical Tolerance Zone Specified for a Cylindrical Feature of			●円柱形となる公差域をSØで指定		
3	Application Error – Leader-Directed Positional Tolerance Applied to a Round Feature Without a Diameter			●位置公差の公差域が、丸い形状に対して(S)Øなしで指定されている		
4	Geometric Tolerance Zone Shape Error – Missing Spherical Diameter Symbol in Positional Tolerance Feature Control Frame – Orientation of Parallel-Plane Tolerance Zone Unclear			●公差域を定める2平面の向きが決まらない		
5, 7, 8	Inappropriate Symbol Used in a Datum Feature Symbol – Diameter symbol not required inside Datum Feature Symbol – Only		●データムフィーチャの表記にアルファベット以外の文字が含まれている			
6	Geometric Tolerance Zone Shape Error – Missing Spherical Diameter Symbol in Positional Tolerance Feature Control Frame – Orientation of Cylindrical Tolerance Zone Unclear			●公差域を定める円柱の軸方向が決まらない		
a	Tolerance Application Error – Form tolerance (Circularity) applied to inapplicable feature type			●円筒度が、適用不可能な形状(平面)に対して指定されている		
b	Unauthorized Datum Feature Reference Error – Form tolerance includes a datum feature reference		●形状公差にデータムが指示されている			
c	Unspecified Datum Feature Error – Geometric tolerance references undefined Datum Feature		●定義されていないデータムを参照している			
d	Tolerance Zone Shape Error – Diametral tolerance zone specified inappropriately			●公差域に半径寸法が指定されているが、実際はそれが不可能な形状		
e	Missing Datum Feature Reference Error – Orientation tolerance must Reference a		●姿勢公差(傾斜度)にデータムが指示されていない			
f	Material Condition Modifier Error – Modifier applied inappropriately to feature without size		●傾斜度に最大実体公差方式が指示されている			
g	Tolerance Application Error – An orientation tolerance (Perpendicularity) applied to where a different tolerance should be specified		●傾斜度が指示されるべき線/面間に直角度が指示されている			線/面間の角度を計測、直角とみなさないための閾値に対して比較
h	Self-Referential Datum Feature Reference Error – Datum Feature B toleranced to Datum B		●平行度のデータムが自分自身			
i	Tolerance Application Error – Orientation tolerance (Parallelism) applied where a different tolerance should be specified (Perpendicularity)			●平行度が、垂直に近い線/面をデータムとして対して指定されている		線/面間の角度を計測、平行とみなさないための閾値に対して比較
		B-rep フィーチャが必要だが、平面、円柱等の曲面タイプが明確に区別可能であれば用が足りるはず(plane, cylindrical_surfaceなど個別の要素を使用する、若しくは b_spline_surface_formで示	PMIは折れ線、unicode textではなく、full semanticな表現	形状要素とPMIの関連が正しく表現されている		

PMI Errors and Violations from a Quality Perspective – PMI Errors 3 H. Hiraoka, 2010-09-11

		a. 形状（形体)そのものが満たすべき要件(ex. Featuring されていなければならない、	b. GD&T情報表現に関する要件	c.形体とGD&T情報の関係に関する要件	d.表記に対する要件	メモ
a	Disallowed Leader Line Error – Use of Hidden Line Leaders on Models (ASME Y14.41)		Datum target	Designation of datum target	Leader ●Hidden line is used for leader.	
b	Datum Target Specification Error – Duplicate Target Specification		Datum target	●Multiple points are designated for a datum target.	datum target	
c	Datum Target Specification Error – Incorrect Datum Target Specification – Format error		Datum target		Datum target symbol ●Incorrect presentation of datum target symbol (Datum target name is shown in upper part of the	
d	Standard Reference Error – Movable Datum Target Symbol used with ASME Y14.5M-1994 without referencing ASME Y14.8-1996 or later (Alternate solution: Reference ASME Y14.5-		Datum target		Datum target symbol ●Incorrect presentation of datum target symbol (Using mixed versions of ASME standard.)	I think multiple standards are not allowed for ISO.
e	Datum Target Specification Error – Invalid Specification – Missing Numeric Suffix		Datum target		Datum target symbol ●Incorrect presentation of datum target symbol (Missing numeric suffix)	
f	Datum Feature Reference Type Error – Wrong type of datum feature referenced (Runout requires a datum axis and cannot be parallel to a single datum center point)	Circular shape	Circular run-out Parallerism	Circular runout requires a datum axis. ●Datum feature for runout is a region. Datum feature for parallerism is a line or a plane. ●Datum feature for parallerism is a single center		
g	Datum Feature Reference Type Error – Insufficient Degrees of Freedom constrained by referenced datum features	Circular shape	Circular run-out Parallerism	●Only a datum plane is referenced and datum axis is not referenced for runout of sphere. Both references are required to define a center point. ●A datum point is referenced for parallerism of cylinder. A datum axis is		
h	Inappropriate Leader Line Error – Center line, phantom line, etc. (Violation of best practice)				Leader line ●Center line or phantom line is used for a leader line.	
i	Type Error – Dimension – Basic dimension must be used where profile tolerance controls orientation and/or location		Profile of a surface		Dimension ● Basic dimension is not used where profile tolerance controls orientation and/or location of a surface.	
j	True Profile Definition Error – Form/orientation/location controlling profile applied to surface oriented/located using directly toleranced		Dimension applied to datum feature for profile of a surface		Dimension ● Directly toleranced dimension is used where profile tolerance controls orientation and/or location	
k	Datum Feature Specification Error – Inappropriate Datum Feature Letter Specified (I, O, or Q)		Datum feature		Datum feature symbol ●Inappropriate letter (I, O or Q) is used as datum feature specification.	
l	Datum Feature Reference Error – Inappropriate Datum Feature Letter Referenced		Reference of datum feature		Referenced datum feature ●Inappropriate letter (I, O or Q) is used as datum feature reference.	
m	Datum Feature Symbol Error – Attachment Error – Ambiguous Specification	Surface for datum feature.	Datum feature	Datum feature shall be assigned to a surface, or an axis defined by a cylindrical surface. ●Datum feature symbol is not directed to a surface.	Presentation of datum feature ●Datum feature symbol is directed to an edge.	
n	Datum Feature Symbol Error – Incomplete Datum Feature Symbol Used		Datum feature		Datum feature symbol ●Incomplete datum feature symbol is used	
o	Datum Feature Symbol Error – Wrong Datum Feature Symbol Used (Datum Feature Symbol from ANSI Y14.5M-1982 or		Datum feature		Datum feature symbol ●Invalid datum feature symbol is used	
p	Geometric Tolerance Zone Shape Error – Leader-directed Orientation Tolerance Specified Without a Diameter Symbol	Cylindrical surface	Perpendicularity	For perpendicularity of axis, shape of tolerance zone is between two planes defined by two datum features, or inside a cylinder defined by a single datum feature.	Presentation of perpendicularity ●Diameter symbol is missing for non-directional perpendicularity defined by a single datum feature.	
q	Datum Feature Symbol Geometry Error – Incorrect Geometry Used in Construction of Datum Feature Symbol		Datum feature		Datum feature symbol ●Invalid color is used for datum feature symbol (?)	
r	Combined Datum Feature Symbol Error – Datum Feature Symbol from ANSI Y14.5M-1982 or Before Combined with		Datum feature		Datum feature symbol ●Invalid datum feature symbol is used	I do not see why case n and case r are different error.

		a. 形状(形体)そのものが満たすべき要件 (ex. Featuring されていなければならない、	b. GD&T情報表現に関する要件	c.形体とGD&T情報の関係に関する要件	d.表記に対する要件	メモ
a	Arrowhead / Terminus Error – Leader Line – Leader directed to surface within feature outline should terminate in a dot (ASME Y14.41) [Also Attachment				注記からフィーチャ表面を指す線は，終端が黒丸(dot)でなければならないが，矢印になっている．	
b	Direction Dependent Tolerance Error – Missing supplemental geometry indicating direction tolerance applies			測る方向に依存して定義される公差を示すのに，その方向を明示する補助線が記されていない．		
c	Feature of Size Dimension Attachment Error – Size dimension and tolerance directed to/attached to only one surface of width feature of size			幅を表わすフィーチャーは，二つの面の間の寸法・公差を示すはずなのに，一つの面しか指していない．		
d	Application Error – Leader directed to surface within feature outline should terminate in a dot (ASME Y14.41)				注記からフィーチャ表面を指す線は，終端が黒丸(dot)でなければならないが，矢印になっている．	
e	Geometric Tolerance Zone Shape Errors – Inapplicable Symbol – Inappropriate diameter symbol specified for width feature dimension		幅を表わすフィーチャーの寸法を示すのに，直径を表わす記号φを用いている．			
f	Arrowhead / Terminus Error – Leader Line – Leader directed to surface within feature outline should terminate in a dot (ASME Y14.41) [Also Attachment				注記からフィーチャ表面を指す線は，終端が黒丸(dot)でなければならないが，矢印になっている．	

Errors

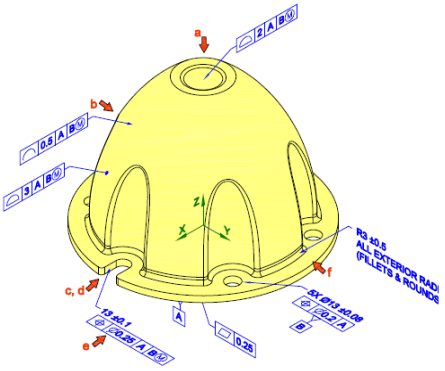

Figure 4-1
PMI Errors: Various Model-Based Dimensioning and Tolerancing Errors

Correct Specifications

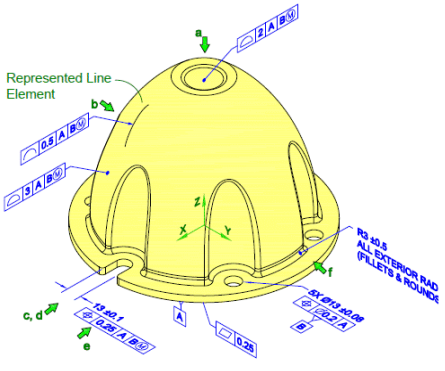

Figure 4-1
Correct Specifications

PMI Errors and Violations from a Quality Perspective – PMI Errors 5 F. Tanaka, 2010-09-14

		a. 形状（形体)そのものが満たすべき要件(ex. Featuring されていなければならない、	b. GD&T情報表現に関する要件	c.形体とGD&T情報の関係に関する要件	d.表記に対する要件	メモ
a	Dimension and Terminus Error – Dimension to/fromedge of hole of tangent to radius (violation	cylinder(hole) or circle	寸法	円筒形体に寸法線を指定する場合 ●穴の端や径の接線に対する寸法を与えている.		violation of best practice
b	Disallowed KEYWORD Error – the keyword "TRUE"is prohibited on annotated				●不正なキーワード	表示の問題？
c	Self-Referential Datum Feature Reference Error – Datum feature is toleranced relative to the datum derived from the datum feature		データムを用いる幾何公差	●対象とする形体自身をデータムとしている		
d	Attachment Error – Leader directed to edge rather than surface – unclear which surface is controlled	線要素	面に対して指定すべき幾何公差		●リーダーの指示先	
e	Attachment Error – Profile tolerance attached to basic dimension		輪郭度公差	枠付き寸法	●枠つき寸法に公差が付いている	表示の問題？
f	Tolerance Extents Error – the extents the tolerance applies are unclear [may be clarified by query and cross-	面	面に対して指定すべき幾何公差	●面範囲の指定がない		
g	Attachment Error – Profile tolerance attached to basic dimension		輪郭度公差	枠付き寸法	●枠つき寸法に公差が付いている	表示の問題？
h	Dimension Origin Error – Dimension origin symbol applied to basic dimension		枠つき寸法		起点記号 （寸法の表示方法）	起点記号付き寸法で枠付き寸法を与えているのが問題のよう？
i	Model Coordinate System Error – Model Coordinate System Missing from Saved View				●座標系が表示されていない	表示の問題？

ASME Y14.5では理論的に正確な寸法のことを"Basic dimension"と呼ぶ

JISでは，枠つき寸法という

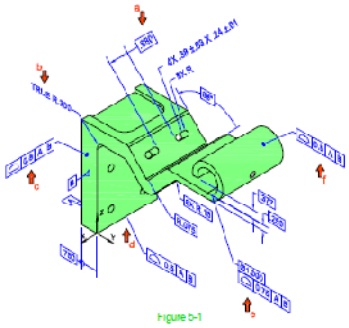

Figure 5-1

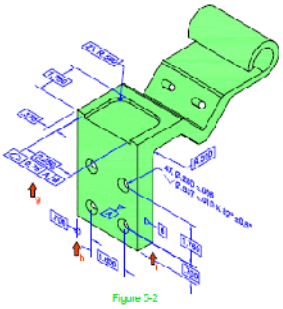

Figure 5-2

PMI Errors and Violations from a Quality Perspective – PMI Errors 6 Y. Kikuchi, 2010-09-10

		a. 形状(形体)そのものが満たすべき要件(ex. Featuring されていなければならない	b. GD&T情報表現に関する要件	c.形体とGD&T情報の関係に関する要件	d.表記に対する要件	メモ
PMI Errors-6-a	Inapplicable modifier for Datum Feature reference – unequally – disposed, independency, envelope (ISO)			Applicable modifier for Daum Feature should be used. ●Inapplicable modifier for Datum Feature reference – unequally – disposed, independency, envelope		
PMI Errors-6-a'	Symbols unique to ISO standards used in ASME-base datasets				Symbols in preorderd standard set should be used. ●Symbols unique to ISO standards used in ASME-base datasets	
PMI Errors-6-b	Unnecessary modifier for Datum Feature reference – tangent plane				Applicable modifier should be used for Datum Feature. ●Unnecessary modifier for Datum Feature reference – tangent plane	
PMI Errors-6-c	Quantity Error – "X places" not specified where needed			"X places" should be specified as needed. ●Quantity Error – "X places" not specified where		
PMI Errors-6-d	Untoleranced feature / missing tolerances		Torelance should be specified as needed. ●Untoleranced feature / missing tolerances			
PMI Errors-6-e	Unnecessary modifier for Datum Feature reference – RFS				Modifier should be used for Datum Feature as needed. ●Unnecessary modifier for Datum Feature reference – RFS	
PMI Errors-6-f	Incorrect format – leading and trailing zero usage – incorrect number of decimal places (related to units)				Leading and trailing zero should be used in correctly. ●Incorrect format – leading and trailing zero usage – incorrect number of decimal places (related to units)	
PMI Errors-6-g	Duplicate Datum Feature Reference – datum feature referenced twice in a feature control frame			Datum feature should not be referenced in duplicatie. ●Duplicate Datum Feature Reference – datum feature referenced twice in a feature control frame		
PMI Errors-6-h	Runout applied to also control size – this application is not defined in ASME or ISO. runout may be used to control a basically dimensioned feature if its size is controlled a profile of a surface telerance; or, runout may be used to control a feature of size whose size is controlled by a directly toleranced dimension(+–) as shown.			Runout should beused to control a feature of sieze. ●Runout applied to also control size – this application is not defined in ASME or ISO. runout may be used to control a basically dimensioned feature if its size is controlled a profile of a surface telerance; or, runout may be used to control a feature of size whose size is controlled by a	Run out is not defined in ASME or ISO.	
PMI Errors-6-i	Disallowed modifier for Datum Feature reference – MMC (MMB) or LMC (LMB) for concentricity or symmetry (1994 & 2009), circular runout and total runout (2009)			●Disallowed modifier for Datum Feature reference – MMC (MMB) or LMC (LMB) for concentricity or symmetry (1994 & 2009), circular runout and total		
PMI Errors-6-j	Projection modifier for Datum Feature reference – not defined				●Projection modifier for Datum Feature reference	
PMI Errors-6-k	Flatness attached to a dimension without a center plane Note –corrected k Flatness tolerance moved and attached to .080+–.002 keyway dimension and tolerance.			●Flatness attached to a dimension without a center plane Note –corrected k Flatness tolerance moved and attached to .080;–.002 keyway dimension and		
PMI Errors-6-l	Single direction-dependent positional tolerance for cylindrical feature Note: corrected version include two mutually-perpendicular bi-directional positional tolerances.			Positional tolerance should be defined more than two direction. ●Single direction-dependent positional tolerance for cylindrical feature Note: corrected version include two mutually-		
PMI Errors-6-m	Unspecified Datum Feature – datum feature referenced in feature control frame is undefined			At least one Datum Feature should be referenced from one specification. ●Unspecified Datum Feature – datum feature referenced in feature control frame is undefined		
PMI Errors-6-n	Projected tolerance zone not specified for threaded hole			●Projected tolerance zone not specified for threaded hole		
PMI Errors-6-o	Symbols unique to ISO standards used in ASME-base datasets				●Symbols unique to ISO standards used in ASME-base datasets	
PMI Errors-6-p	Projected tolerance zone length not specified			●Projected tolerance zone length not specified		
PMI Errors-6-q	ISO Tolerance application carried over into ASME-based dataset				●ISO Tolerance application carried over into ASME-based dataset	
PMI Errors-6-r	Projected tolerance zone on non-projectable feature			●Projected tolerance zone on non-projectable feature		
PMI Errors-6-s	Unreferenced Datum Feature – datum feature identified and labeled but not referenced in a feature control frame				Datum Feature that is not referenced from any other declaration is errornous. ●Unreferenced Datum Feature – datum feature identified and labeled but not referenced in a feature control frame	

		a. 形状（形体)そのものが満たすべき要件(ex. Featuring されていなければならない、	b. GD&T情報表現に関する要件	c.形体とGD&T情報の関係に関する要件	d.表記に対する要件	メモ
a	Incorect delimiter for limit dimensions	Featuring	寸法要素がまとまっていること。	引き出し線や寸法補助線が円筒Featureと関係付けられていること。	Delimiter不正。'/'でなく'-'。(**)	
b	Incorrect delimiters ISO uses , and ASME uses .	Featuring	寸法要素がまとまっていること。	引き出し線や寸法補助線が円筒Featureと関係付けられていること。	単位系に関し、ASMEは'.', ISOは','を使用。(**)	我々はISO規格を開発。これ以外のASME vs. ISOの違いを抽出要。
c	Missing size dimension and tolerance for feature of size	Featuring	寸法要素がまとまっていること。	引き出し線や寸法補助線が円筒Featureと関係付けられていること。	Size featureなのに寸法値、公差値表記が抜けている。(**)	
d	Depth tolerance value larger than depth dimension	Featuring	寸法要素がまとまっていること。	引き出し線や寸法補助線が円筒Featureと関係付けられていること。	深さtelerance値が深さ値より大きい。(**)	
e	Conflicting redundant tolerances applied to a feature	Featuring	寸法要素がまとまっていること。	引き出し線や寸法補助線が円筒Featureと関係付けられていること。	矛盾する平面度公差が与えられている。(**)	
f	Accumulation of multiple tolerances conflicts with single tolerance value	Featuring	寸法要素がまとまっていること。	引き出し線や寸法補助線が円筒Featureと関係付けられていること。	重さねると矛盾する公差が与えられている。(**)	
g	These datum features do not have Least Material and Maximum Material	Featuring	寸法要素がまとまっていること。	引き出し線や寸法補助線が円筒Featureと関係付けられていること。	M, Lが指定されているdatumは中心平面を持たMMVC,LMVCがないので不	
h	Missing Countersink Symbol Error.	Featuring	寸法要素がまとまっていること。	引き出し線や寸法補助線が円筒Featureと関係付けられていること。	寸法表記の中でfeature定義を行っているのでfeature記号が必要。(**)	Countersink
i	Missing counterbore symbol error	Featuring	寸法要素がまとまっていること。	引き出し線や寸法補助線が円筒Featureと関係付けられていること。	寸法表記の中でfeature定義を行っているのでfeature記号が必要。(**)	Couterbore

		a. 形状（形体)そのものが満たすべき要件(ex. Featuring されていなければならない、	b. GD&T情報表現に関する要件	c.形体とGD&T情報の関係に関する要件	d.表記に対する要件	メモ
a	Missing Unequally-Disposed Profile MMB Value Error	Featuring	寸法要素がまとまっていること。(**)?	引き出し線や寸法補助線が円筒Featureと関係付けられていること。	Modifier記号の後にOffset値が書かれていない。	GD&T情報そのものの不備or表示の不備。
b	Improper Unequally-Disposed Modifier Error	Featuring	寸法要素がまとまっていること。	引き出し線や寸法補助線が円筒Featureと関係付けられていること。	unilateral-bilateral, unilateral profile toleranceの表示に異なるsymbol, delimiter使用。	Take care ASME vs. ISO difference
c	Missing Unequally-Disposed Modifier Error	Featuring	寸法要素がまとまっていること。	引き出し線や寸法補助線が円筒Featureと関係付けられていること。	Modifierが抜けている。(**)	
d	Datum target Leader Terminator Error	Featuring	寸法要素がまとまっていること。	引き出し線や寸法補助線が円筒Featureと関係付けられていること。	Datum Target leaderにはterminator不要。(**)	
e	Datum Feature Attachment Error	Featuring	寸法要素がまとまっていること。	引き出し線や寸法補助線が円筒Featureと関係付けられていること。	Datum featureのattachmentがfeatureからの単一延長線になっている。(**)	

PMI Errors and Violations from a Quality Perspective – PMI Errors 9 A. Soma, 2010-09-15

		a. 形状（形体)そのものが満たすべき要件(ex. Featuring されていなければならない、	b. GD&T情報表現に関する要件	c.形体とGD&T情報の関係に関する要件	d.表記に対する要件	メモ
a	Leader directed to center plane (not modeled or shown) rather than to surface of width (stepped)				●位置交差の示す先が幅を表す面間ではなく中央の平面のエッジ	
b	Projected tolerance zone on threaded through hole without projection direction indication				●ネジ穴に対する突出公差域が投影方向の指定無しに指示されている	
c	Projected Tolerance Zone Attachment Error – Projected tolerance directed to feature using a method besides leader directed				●突出公差がフィーチャに対してleader directed tolerance以外の方法で指定されている	
d	Projected Tolerance Zone Attachment Error – Projected tolerance specification not attached to				●突出公差がフィーチャの端以外に付いている	
e	Dimension Application Error – Directly Toleranced Dimension used to define the orientation and/or location between features			●フィーチャ間の向き、位置が公差つきの寸法で指示されている		
f	Leader directed to center line (axis) rather than surface of hole or pin			●引き出し線が穴やピンの面ではなく中心線を指している		
		B-rep フィーチャが必要だが、平面、円柱等の曲面タイプが明確に区別可能であれば用が足りるはず(plane, cylindrical_surfaceなど個別の要素を使用する、若しくは b_spline_surface_formで示	PMIは折れ線、unicode textではなく、full semanticな表現	PMIから関連する形状要素が取得でいる		

SASIG
strategic automotive product data standards industry group

A Joint Publication

JAMA
JAPAN AUTOMOBILE MANUFACTURERS ASSOCIATION, INC.

JAPIA

JAMAEIC042

SASIG 3D Annotated Model Standard

SASIG
strategic automotive product
data standards industry group

A Joint Publication

SASIG 3D Annotated Model Standard

AIAG PUBLICATIONS

An AIAG publication reflects a consensus of those substantially concerned with its scope and provisions. An AIAG publication is intended as a guide to aid the manufacturer, the consumer, and the general public. The existence of an AIAG publication does not in any respect preclude anyone from manufacturing, marketing, purchasing, or using products, processes, or procedures not conforming to the publication.

CAUTIONARY NOTICE

AIAG publications are subject to periodic review and users are cautioned to obtain the latest editions.

MAINTENANCE PROCEDURE

Recognizing that this AIAG publication may not cover all circumstances, AIAG has established a maintenance procedure. Please refer to the Maintenance Request Form at the back of this document to submit a request.

Published by:
Automotive Industry Action Group
26200 Lahser Road, Suite 200
Southfield, Michigan 48033
Phone: (248) 358-3570 • Fax: (248) 358-3253

APPROVAL STATUS

The AIAG Collaborative Engineering and Product Development Steering Committee and designated stakeholders approved this document for publication on June 11, 2008.

INTERNATIONAL COPYRIGHT INFORMATION
This manual is subject to International Copyright as shown herein and unauthorized reproduction is not permitted. Contact one of the associations below to discuss reproduction permission. If translated, this manual has been translated and published for guidance only and is intended to help the understanding of the official English version.

SASIG PUBLICATIONS

A SASIG publication reflects a consensus of those substantially concerned with its scope and provisions. A SASIG publication is intended as a guide to aid the manufacturer, the consumer and the general public. The existence of a SASIG publication does not in any respect preclude anyone from manufacturing, marketing, purchasing, or using products, processes, or procedures not conforming to the publication.

SASIG Contact information available at **http://www.sasig.com**

AIAG Copyright and Trademark Notice:

The contents of all published materials are copyrighted by the Automotive Industry Action Group unless otherwise indicated. Copyright is not claimed as to any part of an original work prepared by a U.S. or state government officer or employee as part of the person's official duties. All rights are preserved by AIAG, and content may not be altered or disseminated, published, or transferred in part of such content. The information is not to be sold in part or whole to anyone within your organization or to another company. Copyright infringement is a violation of federal law subject to criminal and civil penalties. AIAG and the Automotive Industry Action Group are registered service marks of the Automotive Industry Action Group.
© 2008 Automotive Industry Action Group

Odette Copyright Notice:

© 2008 Odette International Limited - All rights reserved.

Any other International association contributing to this book.

© 2005 AIAG, GALIA, JAMA, Odette Sweden, VDA

Japan Automobile Manufacturers Association (JAMA) Copyright Notice:
© 2008Japan Automobile Manufacturers Association, Inc.

Japan Auto Parts Industries Association (JAPIA) Copyright Notice:
© 2008 Japan Auto Parts Industries Association

FOREWORD

Technical drawings are information displayed in the form of models or diagrams, which are drawn based on rules and information media. They are often drawn to a set scale and are commonly used to convey the information needed to manufacture a product from product development.

Today's technical drawings usually include a combination of a 3D model and a 2D drawing. This is a more effective process than the traditional 2D only drawing because digital manufacturing processes today need the 3D model in order to develop tooling and fixtures, perform analysis, build prototypes, etc.

Tomorrow's technical drawings will incorporate only a complete annotated 3D model containing all of the information necessary to manufacture a part. This will enable more digital manufacturing uses/re-uses of product data, i.e., feeding dimensional information into a CMM machine along with a 3D model. This annotated 3D model, which is used as a single master, is more efficient for product development than two or more technical drawings used today. When the 3D annotated models are converted to a viewing format in a single location, they are much more accessible to the extended enterprise. These viewing tools also enable improved communication and collaboration at a lower cost than with CAD tools.

Existing standards for 2D drawings can only be partially applied to 3D annotated models. This standard, in conjunction with ISO 16792 "Digital Product Definition Data Practices," defines how to document all the information necessary for all areas (i.e., design, manufacturing, service) in the product creation process.

The method for showing the product characteristics in the 3D model is described in ISO 16792 "Digital Product Definition Data Practices." However, the method is incomplete as a 3D annotated model standard because it does not address all of the types of information required in a technical drawing. This SASIG 3D Annotated Model Standard will address the information not covered in ISO 16792 for a completely 3D annotated model.

This standard is intended to be tool independent. This standard will be used for further development of CAD tools.

This standard was developed by the Digital Engineering Visualization Work Group (DEV) of the Strategic Automotive product data Standards Industry Group (SASIG), which began its activities in October 2003.

This SASIG 3D Annotated Model Standard represents the consensus reached by all companies of the global automotive standards organizations (AIAG, JAMA/JAPIA, GALIA, VDA, Odette-Sweden). This standard can also serve as a reference to non-automotive industries as the issues are very similar.

Special Implementation Considerations and Disclaimers

- The SASIG DEV Work Group is making every possible effort to harmonize this SASIG 3D Annotated Model Standard with existing related Global standards.
- This SASIG 3D Annotated Model Standard closely follows the ISO 16792 standard.
- Ongoing efforts are in place to harmonize ISO 16792 and the SASIG 3D Annotated Model Standard with other ISO publications.
- The SASIG DEV Work Group has identified 'discrepancies' within different ISO standards.

ACKNOWLEDGEMENTS

The following individuals and their companies contributed to this project. SASIG thanks both the workers and their companies for the time and support for this project.

Phillip Marlow (Chair)..... Visteon Corporation
Gary Pilarski (Co-chair)..... Delphi Corporation

Yukio Shitama ..... Bosch Corporation
Roberto Sorito..... Robert Bosch GmbH
Tetsuya Ueda ..... DAIHATSU MOTOR CO., LTD.
Reinhold Klass..... Daimler AG
Donald L. Galway..... Dana Corporation
Tomonari Fukaya..... DENSO CORPORATION
Hideki Hashimoto ..... DENSO CORPORATION
Masaki Suzuki..... DENSO INFORMATION TECHNOLOGY CORPORATION
Sandra Ashford ..... Ford Motor Company
Dave Roberts..... Ford Motor Company
Shigekazu Hatori..... Fuji Heavy Industries Ltd.
Mari Omura..... FUJITSU KYUSHU SYSTEM ENGINEERING LIMITED
Jun Otsuka..... Hino Motors, Ltd.
Isao Komata ..... Hitachi Engineering & Services Co., Ltd.
Nobuyuki Harada..... Hitachi-Omron Terminal Solutions, Corp.
Akiyoshi Nagai ..... Honda R&D Co., Ltd.
Hiromi Shimada..... Honda R&D Co., Ltd.
Hiroki Saito..... ICHIKOH INDUSTRIES,LTD.
Yukihiro Tsurumi ..... ISEKI & CO.,LTD.
Maki Hamaya..... ISUZU MOTORS LIMITED
Keiichi Takeda..... ISUZU MOTORS LIMITED
Hidekazu Yasui..... KAWASAKI HEAVY INDUSTRIES, LTD.
Katsuji Tsujisawa..... Mazda Motor Corporation
Masashi Kawamoto ……..Mitsubishi Agricultural Machinery Co.,Ltd.
Takayuki Inoue ..... Mitsubishi Electric Corporation
Kunihiko Yoshino..... Mitsubishi Fuso Truck and Bus Corporation
Yoshiyuki Miyoshi ..... Mitsubishi Heavy Industries, Ltd.
Akira Tohyama ..... MITSUBISHI MOTORS CORPORATION
Hiroshi Kaneko..... NISSAN DIESEL MOTOR CO., LTD.
Shigeto Takagawa..... Nissan Motor Co., Ltd.
Isamu Kita..... OMRON Corporation
Didier Buysse..... Renault SAS
Phillipe Legrue..... Renault SAM
Takeyuki Fukuya ..... SUZUKI MOTOR CORPORATION
Haruo Iga ..... SUZUKI MOTOR CORPORATION
Junzo Fukuda ..... TOYOTA MOTOR CORPORATION
Yoko Irie..... TOYOTA MOTOR CORPORATION
Joji Mukai ..... TOYOTA MOTOR CORPORATION
Tsuneaki Sakakibara ..... TOYOTA MOTOR CORPORATION
Wendy Rossman ..... Trico Products Corporation
Shigeru Tsushima ..... TSUSHIMA, INC.

Hidenori Ito ..... Yamaha Motor Co., Ltd.

Organizational Support:

Akram Yunas ..... Automotive Industry Action Group
Alexander Loire ..... GALIA
Masamichi Hagai ..... Japan Automobile Manufacturers Association, Inc.
Akemi Murayama ..... Japan Automobile Manufacturers Association, Inc.

Contributing Vendors:

Adobe Systems Co., Ltd.
Autodesk Ltd.
Dassault Systemes
DIGITAL PROCESS LTD.
ELYSIUM CO., LTD
IBM
KUBOTA SYSTEMS INC.
Lattice Technology Co.,Ltd.
Parametric Technologies Corporation
Siemens Product Lifecycle Management Software Inc.

TABLE OF CONTENTS

FOREWORD **2**

ACKNOWLEDGEMENTS **3**

TABLE OF CONTENTS **5**

FIGURES 7
TABLES 8

INTRODUCTION **9**

SCOPE 9
REFERENCES 10
TERMS AND DEFINITIONS 12

1 PRODUCT DEFINITION DATA (3D ANNOTATED MODELS) **15**

1.1 PURPOSE 15
1.2 REQUIREMENTS 15
1.3 MANAGEMENT DATA CONTAINED OUTSIDE OF THE 3D ANNOTATED MODEL 17

2 MANAGEMENT DATA **18**

2.1 PURPOSE 18
2.2 GENERAL REQUIREMENTS 18
2.3 PARTS LIST 19
2.3.1 Requirements *19*

3 SPECIFICATION IDENTIFICATION AND DISPLAY METHODS **21**

3.1 PURPOSE 21
3.2 GENERAL REQUIREMENTS 21
3.3 REQUIREMENT FOR ATTRIBUTES 22
3.3.1 Requirement *22*

4 ANNOTATION CREATION AND DISPLAY WITHIN A 3D MODEL **23**

4.1 PURPOSE 23
4.2 GENERAL ANNOTATION CREATION AND DISPLAY 23
4.2.1 Requirement *23*
4.3 MANAGEMENT OF VIEWS AND SECTIONS 25
4.3.1 Requirements *25*

5 APPLYING ANNOTATIONS TO MULTIPLE GEOMETRIC FEATURES **28**

5.1 PURPOSE 28
5.2 REQUIREMENTS 28

6 3D ANNOTATED PARTS AND ASSEMBLY MODELS **30**

6.1 PURPOSE 30
6.2 REQUIREMENTS 30

7 GEOMETRIC TOLERANCING OF 3D MODELS **32**

7.1 PURPOSE 32
7.2 REQUIREMENTS 32

8 IDENTIFYING AREAS ON A 3D MODEL **33**

8.1 PURPOSE 33
8.2 GENERAL REQUIREMENTS 33
8.3 IDENTIFYING AREAS USING SURFACES 34
8.4 IDENTIFYING AREAS USING LINES AND CURVES 34

9 REPRESENTATIONS OF DESIGN CHANGES 36

9.1 PURPOSE 36
9.2 REQUIREMENTS 36

10 SURFACE TEXTURE CREATION AND DISPLAY 38

10.1 PURPOSE 38
10.2 REQUIREMENTS 38

11 INDICATING MATERIAL THICKNESS AND DIRECTION FOR NON SOLID MODEL PARTS 39

11.1 PURPOSE 39
11.2 REQUIREMENTS 39

12 SIMPLIFIED REPRESENTATION OF STANDARD PARTS 41

12.1 PURPOSE 41
12.2 GENERAL REQUIREMENTS 41

13 WELDING CREATION AND DISPLAY 44

13.1 PURPOSE 44
13.2 REQUIREMENTS 44

14 SEALER CREATION AND DISPLAY 49

14.1 PURPOSE 49
14.2 REQUIREMENTS 49

15 COLOR CHARACTERISTICS OF A MODEL 51

15.1 PURPOSE 51
15.2 REQUIREMENTS 51

MAINTENANCE REQUEST 53

Figures

1.2-1 Information configuration of a 3D annotated model
1.2-2 3D annotated model
1.3-1 Management data are outside the 3D annotated model
1.3-2 Management data created using non-CAD software
2.2-1 Management data by other electronic format
2.2-2 Management data in an itemized note
2.3-1 Parts list in an item block table
2.3-2 Parts list displayed in the CAD system
3.2-1 Specification in a table
3.2-2 Specification in an itemized note
3.3-1 Example of displaying attributes
4.2-1 3D model with annotations
4.2-2 Overlapping annotations
4.2-3 Display of view direction or sections with 3D models
4.2-4 Surface/Edge annotations
4.3-1 Selecting views and sections
4.3-2 Example of annotation that is set as appropriate sectional view
4.3-3 Combined sectional view
4.3-4 Various views and sections
5.2-1 Example of a single annotation linked to multiple feature edges
5.2-2 Example of a single annotation linked to multiple feature surfaces
6.2-1 Assembly 3D annotated model
7.2-1 Example of annotation with geometry outside of tolerance
8.2-1 Annotations with leader lines
8.2-2 Location of an area
8.4-1 Datum targets
8.4-2 Curves identifying an area
9.2-1 Examples of design changes using symbols and annotations
9.2-2 Examples of design changes using different layers
9.2-3 Examples of design changes using any combination of annotation, highlighting, and color
10.2-1 Example of the surface texture indication by 3D model

Figures (continued)

10.2-2 Example of symbols on dimension lines – not recommended
11.2-1 Sectional example for showing material thickness and direction
11.2-2 Examples of the notation of thickness and the direction of thickness
12.2-1 Screw thread
12.2-2 Root circle diameter of the screw indicated by a line
12.2-3 Thread indicated by coloring
12.2-4 Example of representation of internal thread
12.2-5 Example of representation of knurl
12.2-6 Root circle diameter on shaft side of the spline indicated by a line
12.2-7 Spline
12.2-8 Actual shape of the spline
12.2-9 Root circle diameter on hub side of the spline indicated by a line
12.2-10 Bearing
13.2-1 Case where arrow cannot touch on weld area
13.2-2 Example of resistance and spot welding
13.2-3 Example of welding shape notation in a 3D model
13.2-4 Example of unclear notation of welding material shape
13.2-5 Notation of material shape and welding shape
13.2-6 Recommended method for a single side weld
13.2-7 Examples of welding area notation
14.2-1 Sealer instruction
14.2-2 Applied shape and area described on 3D models
14.2-3 Sealer instructions using a section

Tables

1.2.1 Examples of information needed to define a product

INTRODUCTION

Scope

This *SASIG 3D Annotated Model Standard* is the global automotive industry standard for creating 3D annotated models. Though developed by the automotive industry, this standard is applicable to all industries. The primary emphasis of this standard is to ensure that all of the information required to completely define a product is captured within the product definition data set, e.g., model geometry, 3D annotations, management data, etc… as defined in ISO 16792.

This document can be used for vehicle and manufacturing design documentation.

This document is an enabler for the complete replacement of 2D drawings by 3D annotated models. For additional details and use cases, see the *SASIG DEV Guideline Document* (D-21).

Legal or regulatory issues pertaining to 3D annotated models are not within the scope of this document.

References

The following documents were used in developing this standard. They may or may not be referenced throughout the document.

ISO 31-0:1992	Quantities and units -- Part 0: General principles, Annex B (Informative) (Guide to the rounding of numbers)
ISO 128-30:2001	Technical drawings -- General principles of presentation -- Part 30: Basic conventions for views
ISO 128-34:2001	Technical drawings -- General principles of presentation -- Part 34: Views on mechanical engineering drawings
ISO 128-44:2001	Technical drawings -- General principles of presentation -- Part 44: Sections on mechanical engineering drawings
ISO 129:1985	Technical drawings -- Dimensioning -- General principles, definitions, methods of execution and special indications
ISO 225:1983	Fasteners -- Bolts, screws, studs and nuts -- Symbols and designations of dimensions
ISO 406:1987	Technical drawings -- Tolerancing of linear and angular dimensions
ISO/DIS 1101:2004	Geometrical Product Specifications (GPS) -- Geometrical tolerancing -- Tolerances of form, orientation, location and run-out
ISO/FDIS 1101/DAMD1	Geometrical Product Specifications (GPS) -- Geometrical tolerancing -- Tolerances of form, orientation, location and run-out -- AMENDMENT 1: Representation of specifications in the form of a 3D model
ISO 1302:2002	Method of indicating surface texture on drawing
ISO 1503:1977	Geometrical orientation and directions of movements
ISO 1660:1987	Technical drawings -- Dimensioning and tolerancing of profiles
ISO 2553:1992	Welded, brazed and soldered joints -- Symbolic representation on drawings
ISO 2692:1988	Technical drawings -- Geometrical tolerancing -- Maximum material principle
ISO 2768-1:1989	General tolerances -- Part 1: Tolerances for linear and angular dimensions without individual tolerance indications
ISO 2768-2:1989	General tolerances -- Part 2: Geometrical tolerances for features without individual tolerance indications
ISO 3040:1990	Technical drawings -- Dimensioning and tolerancing -- Cones
ISO 4130:1999	Road vehicles -- Three-dimensional reference system and fiducial marks -- Definitions
ISO 4753:1999	Fasteners -- Ends of parts with external ISO metric thread
ISO 5457:1999	Technical product documentation -- Sizes and layout of drawing sheets
ISO/DIS 5458:1998	Geometrical Product Specifications (GPS) -- Geometrical tolerancing -- Positional tolerancing

References (continued)

ISO 5459:1981	Technical drawings -- Geometrical tolerancing -- Datums and datum-systems for geometrical tolerances
ISO 6410-1:1993	Technical drawings -- Screw threads and threaded parts -- Part 1: General conventions
ISO 6410-3:1993	Technical drawings -- Screw threads and threaded parts -- Part 3: Simplified representation
ISO 6413:1988	Technical drawings -- Representation of splines and serrations
ISO 8015:1985	Technical drawings -- Fundamental tolerancing principle
ISO 8826-2:1989	Technical drawings -- Rolling bearings -- Part 2: Detailed simplified representation
ISO 10209-1:1992	Technical product documentation -- Vocabulary -- Part 1: Terms relating to technical drawings: general and types of drawings
ISO 10209-2:1993	Technical product documentation – Vocabulary – Part 2: Terms relating to projection methods
ISO 10578:1992	Technical drawings – Tolerancing of orientation and location – Projected tolerance zone
ISO 10579:1993	Technical drawings – Dimensioning and tolerancing – Non-rigid parts
ISO 13567-1:1998	Technical product documentation -- Organization and naming of layers for CAD -- Part 1: Overview and principles
ISO 16792:2006	Technical product documentation -- Digital product definition data practices
JIS Z 8114:1999	Technical product documentation -- Terms relating to technical drawings
JIS B 3401:1993	Glossary of terms used in CAD
JAMAEIC020:2004	JAMA/JAPIA Guidelines for combining 3D models and 2D CAD documentation V1.0
SASIG	SASIG Guideline for combining 3D models and 2D CAD Documentation
SASIG	SASIG Guideline for Digital Engineering Visualization
SASIG	SASIG CAD functionality requirements lists www.sasig.com
SASIG	SASIG Viewer functionality requirements lists www.sasig.com

Terms and Definitions

For the purpose of this standard, the following terms and definitions apply. Only terms not defined in ISO 16792 are listed below. Please reference ISO 16792 for additional terms and definitions.

Note: When the term 'feature' is used in this standard in reference to a model or drawing, it is referring to the digital representation of the feature.

area

Expressing the size of a region of space by the surfaces.

CAD System

An authoring tool for creating and modifying 3D annotated models. Note: If the viewer is used to create the 3D annotations and / or markups, then the viewer would become an authoring tool as well.

coordinate, global

Large-area coordinate system that is defined for the target space, or the coordinate values represented by this coordinate system.

coordinate, local

Localized coordinate system that is defined relatively for global coordinates, or the coordinate values represented by this coordinate system.

create history

The history (records) of CAD modeling.

design change

Change of product shape, a product characteristic, management data.

design change content

Detail of design changes.

The "design change" means the change of product shape, a product characteristic, management data.

design change history

The history (records) of design changes.

design change number

Number(s) displayed on the model to identify the design change.

dimensional parameter

Input variables to change a product shape.

dimensional parameters, relational expression for

A numerical equation relating a dimensional parameter with a value to set a dimensional parameter.

dimensional parameters, table for

Reference chart of type and value constituting the dimensional parameter.

electronic format

Information represented in an electronic data saving file format used in the computer; for example, Excel-file and CAD-file, etc.

fillet surface

Curved surface that is inserted to smooth the connections between multiple surfaces or curved surfaces.

item block

Column provided on the drawing to enter the details (part name, material, quantity, etc.) of the object shown in the drawing or its component parts (members).

limited line

Expressing the size of a region of space by the linear (curve and line, etc.) elements.

models, 3D annotated

3D models that display product shape and product characteristics (notes and attributes), and models that contain information such as product characteristics and management data independently of 3D models.

model, 3D model, three-dimensional model

Model geometry displaying a three dimensional shape. They can be classified into solid models, surface models, and wire frame models. When an annotation to display product characteristics is added to a 3D model, this is also called a "3D model."

model, CAM

Models for processing.

model, solid

Model geometry displaying a 3Dimensional shape so that the space occupied by this shape is clearly specified.

model, surface

Model geometry displaying a 3Dimensional shape using surfaces.

model, wire frame

Model geometry displaying a 3Dimensional shape using edge lines.

parts list

A list of parts that defines an assembly or a sub-assembly. Also may be referred to as an *item list*.

product characteristics

Information regarding specification information such as product dimensions, tolerance and geometrical characteristic indications, surface texture, and surface treatment, and precautions for manufacturing and inspection.

product shape

Shape of the product that was actually manufactured. However, for 3D models that are handled for reference, the draft angle and fillet surface may not be included.

tabular

Annotation supplementing the content of the model in the form of a table. For example, a table containing multiple pieces of information necessary for processing, measuring, or testing.

texture mapping

Used in order to express the feel of a material of a 3D model.

title block, title panel

A table provided as part of a model for the entry of items required for model management and product management information related to the contents of the model such as part number, part name, company name, etc. in a single group.

viewers

Tools that enable reference to the data created by CAD systems even if a CAD system is not available. These tools can display and print the data but cannot edit it. Some types of viewers can display annotations and attributes attached to 3D models; make interference checks; perform measurements; or write data in red (additional notes). Essentially, the original data cannot be changed.

1 PRODUCT DEFINITION DATA (3D ANNOTATED MODELS)

1.1 Purpose

This chapter defines a 3D annotated model.

1.2 Requirements

The 3D annotated model contains the model, product characteristics, and management data (see Table 1.2-1 and Figure 1.2-1.) Figure 1.2-1 shows the information configuration of 3D annotated models. Figure 1.2-2 shows an example of a 3D annotated model.

The 3D annotated model may be contained in multiple files that are collectively called a product definition data set per ISO 16792.

Table 1.2-1 Examples of information needed to define a product

Group	Information necessary for definition of a product.
Model	3D shape, model coordinate system.
Product Characteristics	Dimensions with tolerances, notes, user-defined coordinate systems, and supplemental geometry.
Management Data	Follow ISO 16792 sec. 3.18 for management data (i.e., part name, part number, quantity used, approval signature/date, design change history, destination, and configuration).

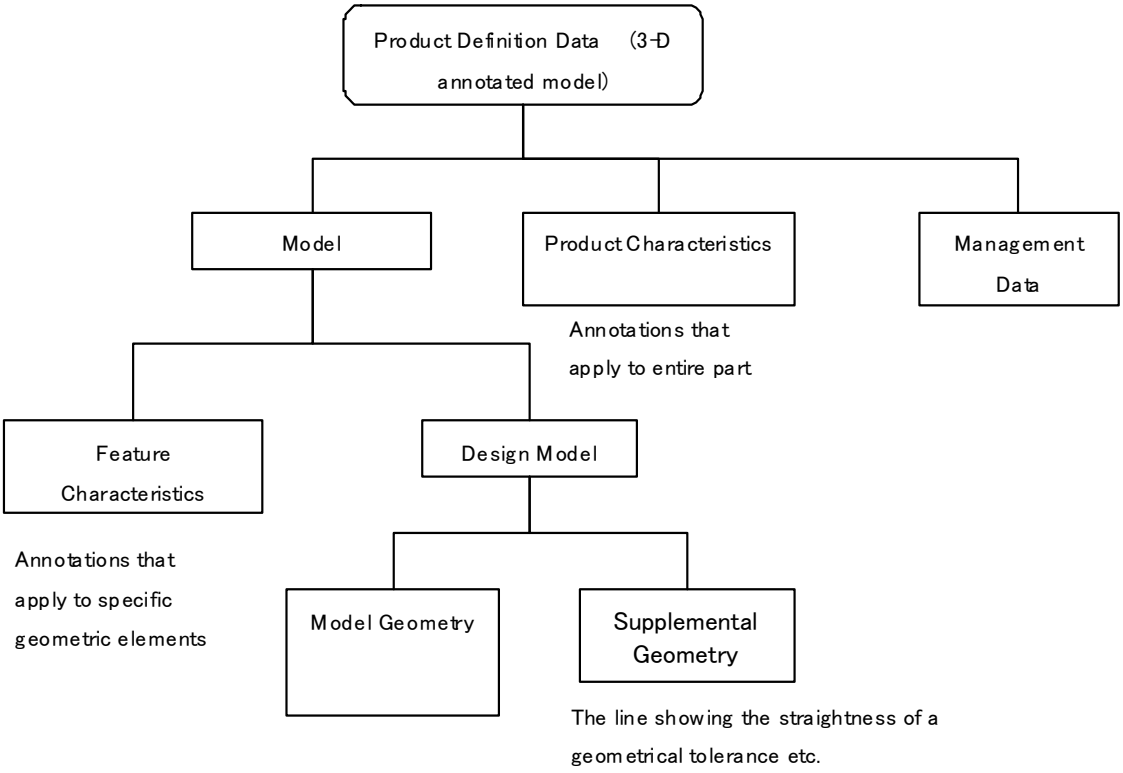

Figure 1.2-1 Information configuration of a 3D annotated model

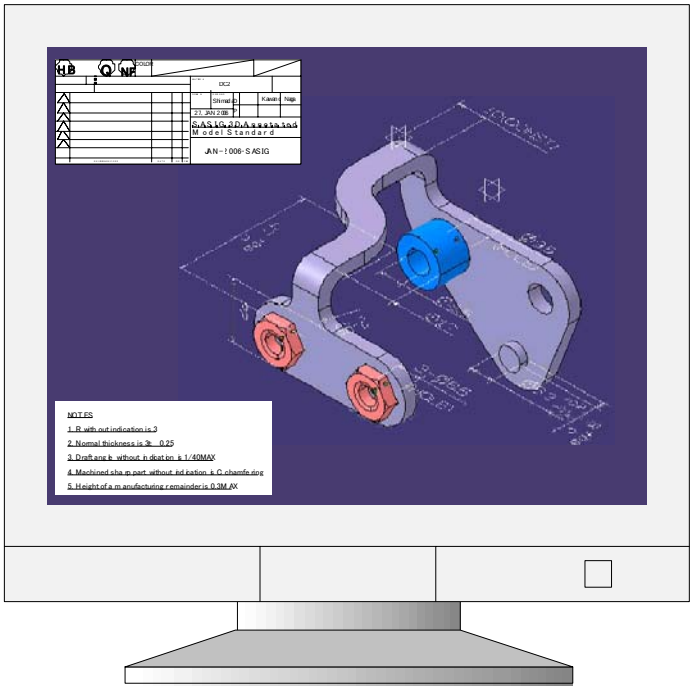

Figure 1.2-2 3D annotated model

1.3 Management Data Contained Outside of the 3D Annotated Model

Management data may be placed in other electronic information formats outside of the CAD model. When this occurs, the data structure will be as shown below.

Figure 1.3-1 shows the information configuration of 3D annotated models and management data. Figure 1.3-2 shows an example of a 3D annotated model including management data that are in another software package.

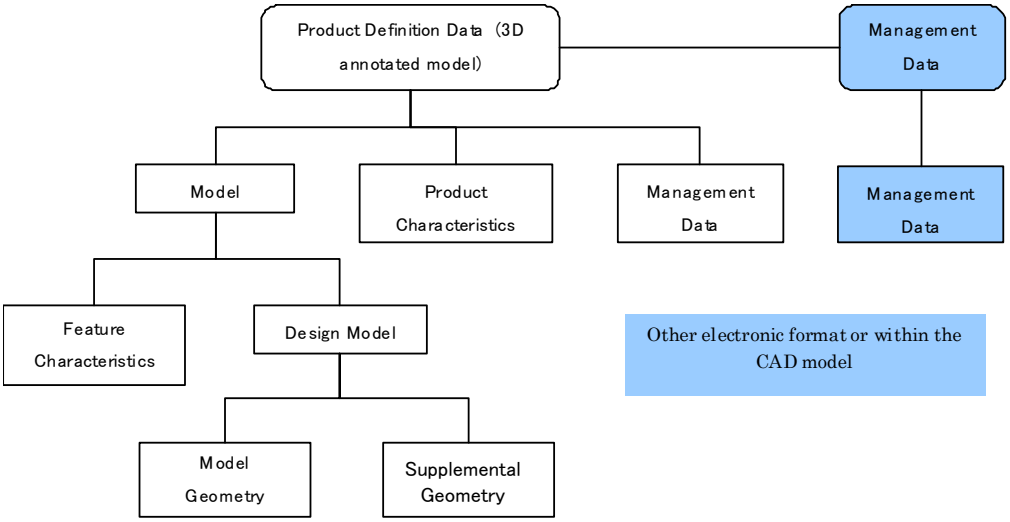

Figure 1.3-1 Management data are outside the 3D annotated model

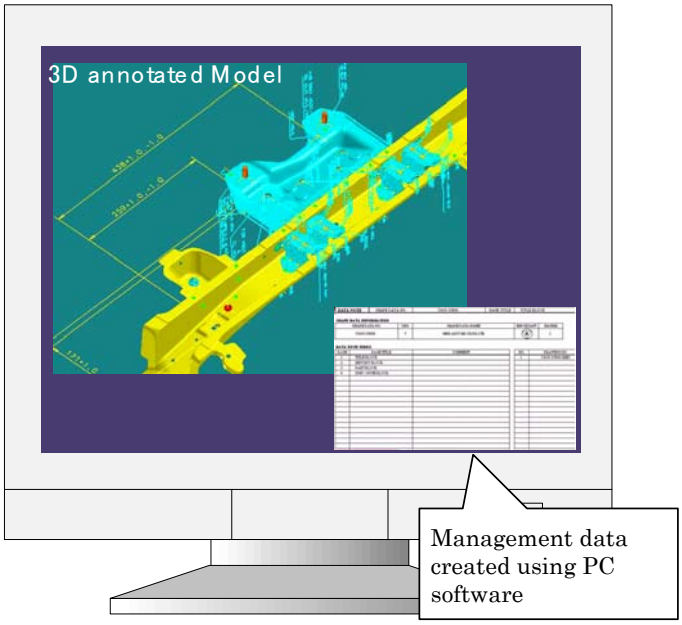

Figure 1.3-2 Management data created using non-CAD software

2 MANAGEMENT DATA

2.1 Purpose

This chapter outlines the methods for annotating management data.

2.2 General Requirements

a) Refer to ISO 16792, sec. 5.4 “Management data” for a general requirement for annotating management data.

b) For requirements regarding notes and special notations, see ISO 16792 sec. 8.2.

c) Management data can be created in the CAD system and/or other electronic formats. Whenever possible, the data should not be duplicated (see Figure 2.2-1 and Figure 2.2-2.)

d) The location of all data required to completely define a part needs to be identified from within all data files.

e) Management data location and structure are determined by company policy.

f) Title block, notes, item block, and other management data should be arranged to avoid overlapping.

g) In general, management data will apply to the entire product. Exceptions would include multiple material specifications, finishes, etc. When these exceptions exist, the features that they apply to must also be identified within the 3D model.

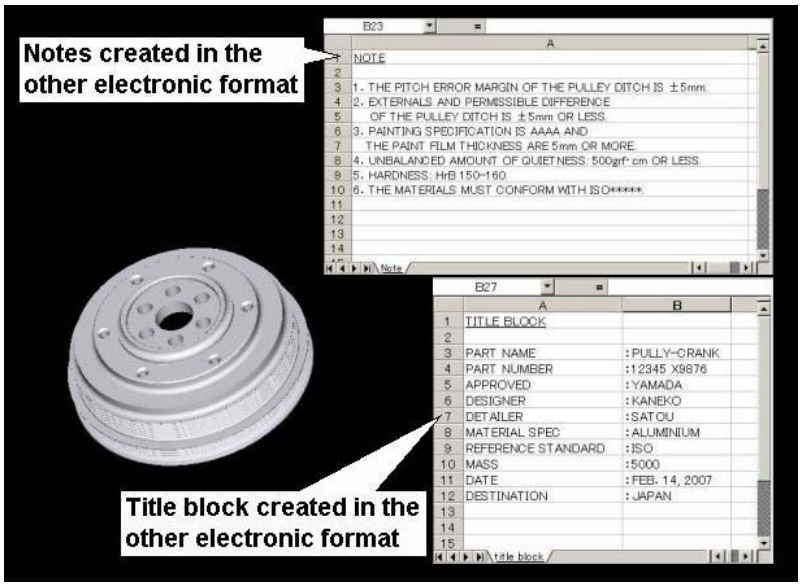

Figure 2.2-1 Management data by other electronic format

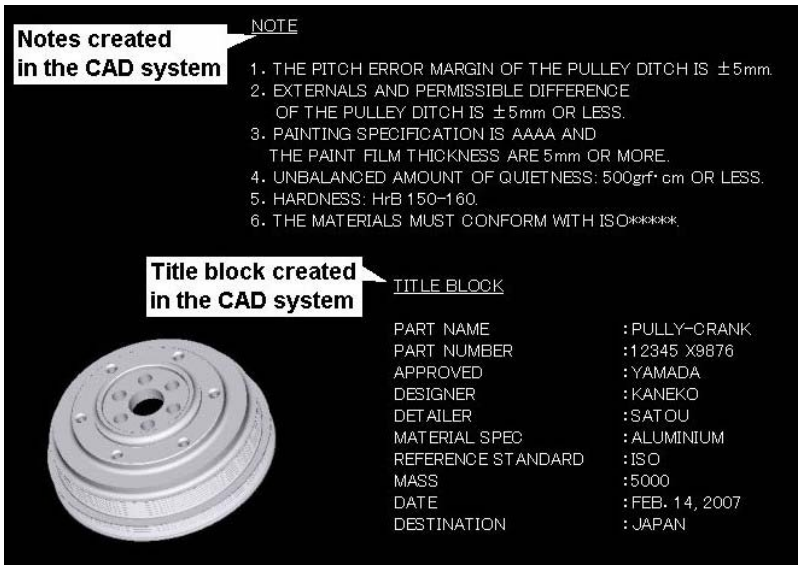

Figure 2.2-2 Management data in an itemized note

2.3 Parts List

2.3.1 Requirements

a) In 3D annotated assembly models, the parts list should be completely defined. Two different examples for displaying parts lists are shown in Figure 2.3-1 and Figure 2.3-2.

b) Parts list(s) are not required for individual part models.

c) Items should be able to be selected in either the parts list or the 3D model, and the related items should be highlighted accordingly.

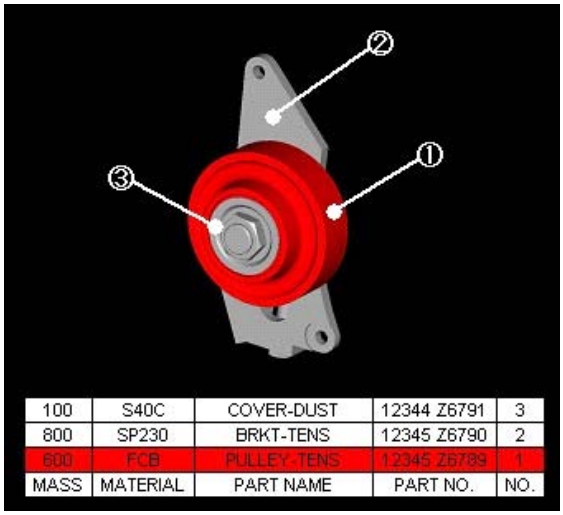

Figure 2.3-1 Parts list in an item block table

Figure 2.3-2 Parts list displayed in the CAD system

3 SPECIFICATION IDENTIFICATION AND DISPLAY METHODS

3.1 Purpose

This chapter outlines the methods for annotating specifications in 3D annotated models.

3.2 General Requirements

a) Display specifications in a table or an itemized note (see Figure 3.2-1 and Figure 3.2-2.)

b) Specifications in general notes apply to the entire 3D model unless otherwise specified. See Chapter 2.2 for requirements.

c) The 3D Annotated Model should contain all necessary information for checking the consistency between specifications and geometry (e.g., number of tooth).

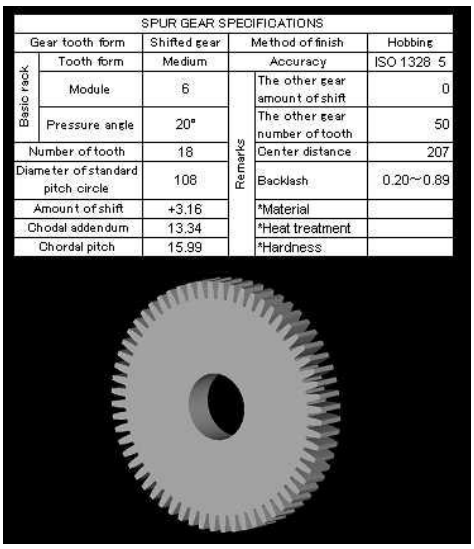

SPUR GEAR SPECIFICATIONS					
Gear tooth form		Shifted gear	Method of finish		Hobbing
Basic rack	Tooth form	Medium	Accuracy		ISO 1328 5
	Module	6	Remarks	The other gear amount of shift	0
	Pressure angle	20°		The other gear number of tooth	50
Number of tooth		18		Center distance	207
Diameter of standard pitch circle		108		Backlash	0.20~0.89
Amount of shift		+3.16		*Material	
Chodal addendum		13.34		*Heat treatment	
Chordal pitch		15.99		*Hardness	

Figure 3.2-1 Specification in a table

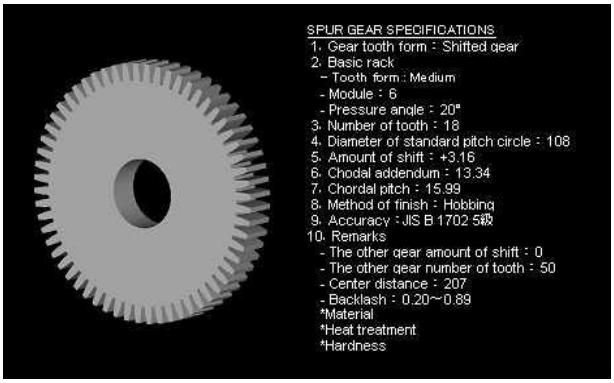

Figure 3.2-2 Specification in an itemized note

3.3 Requirement for Attributes

This chapter outlines the method for annotating specifications as attributes of a 3D model.

3.3.1 Requirement

a) When using attributes, essential information of the specification can be supplied by using annotations in the 3D model (see Figure 3.3-1.) For attributes not contained in the 3D model, follow company policies. For examples of attributes, see ISO 16792, 7.3.3.

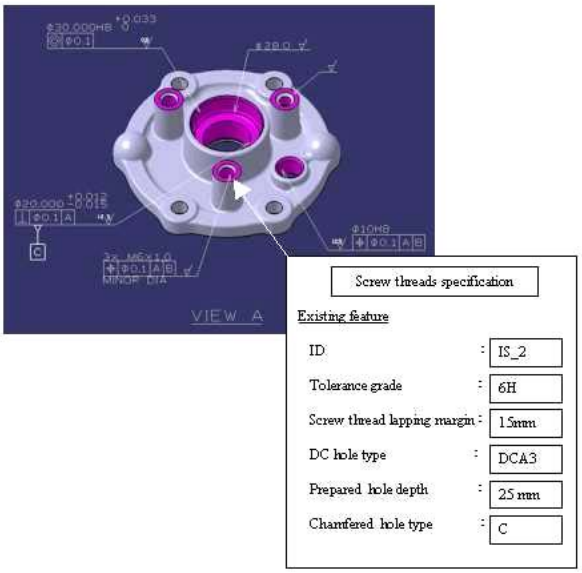

Figure 3.3-1 Example of displaying attributes

4 ANNOTATION CREATION AND DISPLAY WITHIN A 3D MODEL

4.1 Purpose

Annotation creation in a 3D model can follow a similar method as with 2D drawing standards. This chapter describes 3D annotation creation and display (see Figure 4.2-1.)

4.2 General Annotation Creation and Display

This section discusses general information as well as creation and display of annotation within a 3D model. Reference ISO 16792, section 5.

4.2.1 Requirement

a) To increase readability, annotations can be organized using groups and views (see Figure 4.2-3.)

b) When annotations are added to a 3D model and viewed in the appropriate direction, arrange each annotation, leader line, and dimension line, etc. (see Figure 4.2-2) so that they do not overlap.

c) The color of all annotation should be set so that it contrasts with the 3D model and the background.

d) Leader lines and projection lines, etc. used with annotations do not have to point at the boundary line when they are used to express shape (see Figure 4.2-4.)

e) Annotations must be linked to all associated geometry and may be represented in one or more views and/or sections. (When annotating multiple geometric features, see chapter 5.)

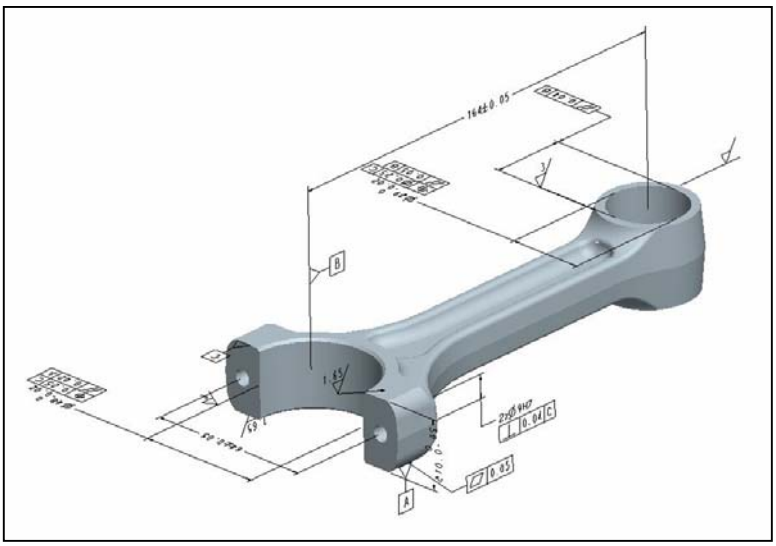

Figure 4.2-1 3D model with annotations

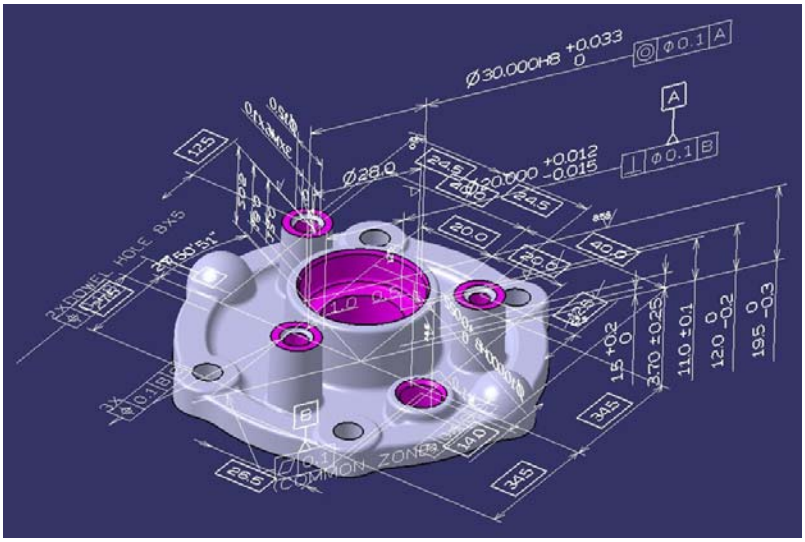

Figure 4.2-2 Overlapping annotations

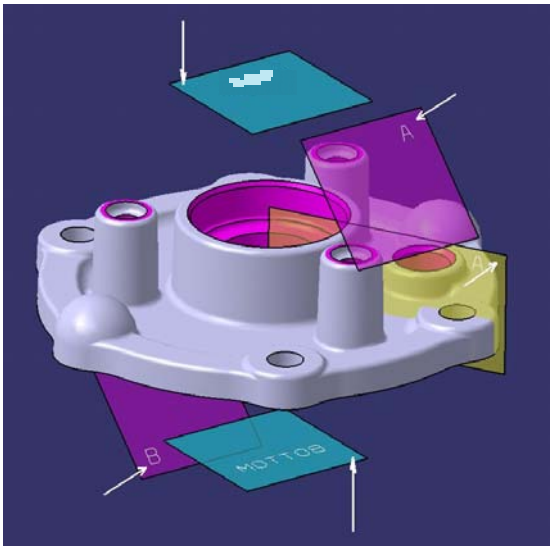

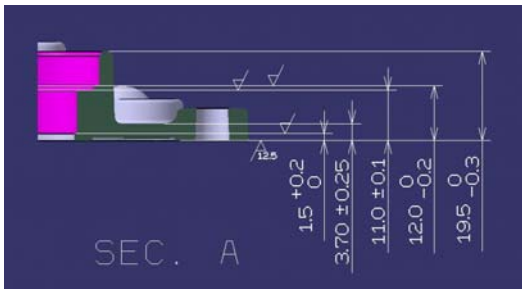

Figure 4.2-3 Display of view direction or sections with 3D models

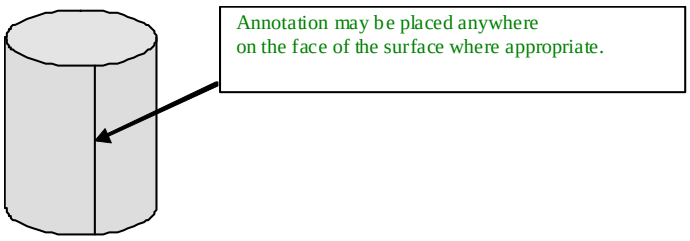

Figure 4.2-4 Surface/Edge annotations

4.3 Management of Views and Sections

This chapter describes how to manage views and sections within 3D models.

4.3.1 Requirements

a) Views and sections should be easily identified and selectable from a list or by selecting the view plane from the 3D model (see Figure 4.3-1 and Figure 4.3-3.)

b) All annotations must be managed by grouping, layering, or linking to a view or a section to make the model readable (see Figure 4.3-2 and Figure 4.3-4.) (Caution: Turning on all annotations in a complex model may make viewing the annotations and/or model very difficult.)

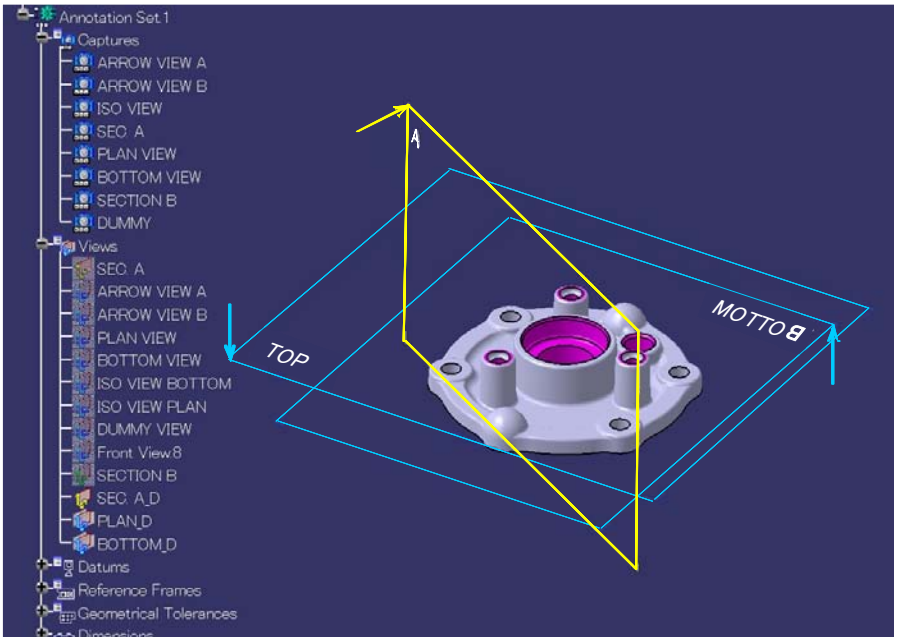

Figure 4.3-1 Selecting views and sections

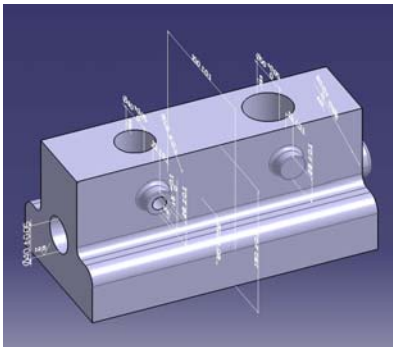

All annotation displays

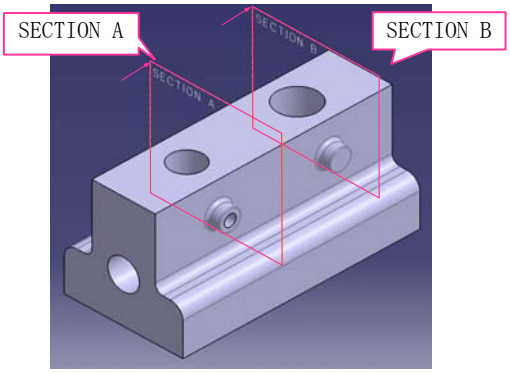

Setup of sectional-view plane

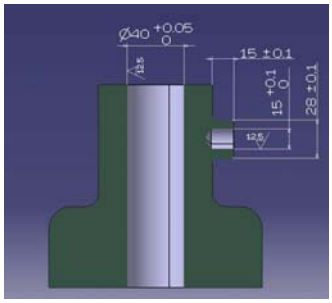

SECTION A

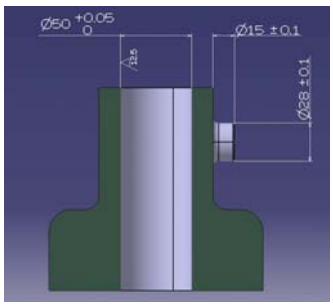

SECTION B

Annotation is displayed on the plane behind SECTION B.

Figure 4.3-2 Examples of annotating sectional views

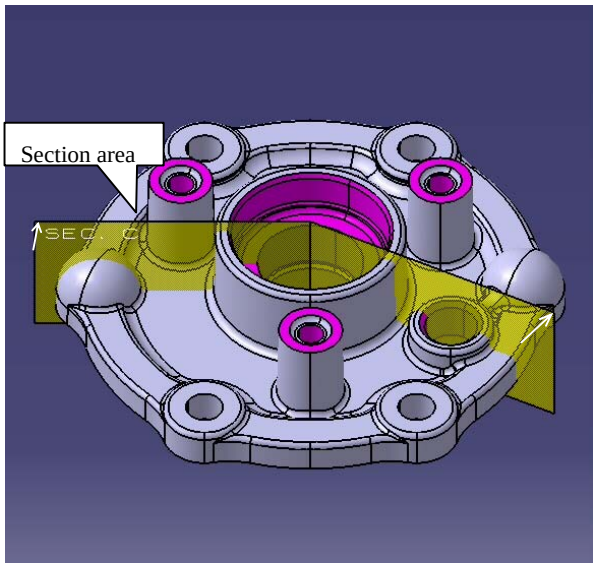

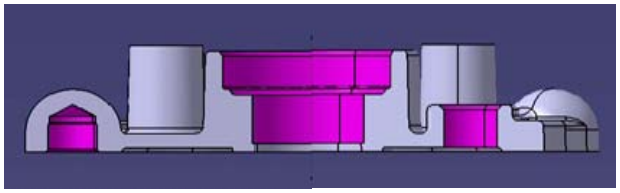

Combined sectional view

Figure 4.3-3 Combined sectional view

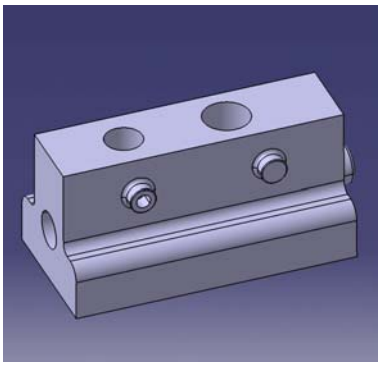

Initial display

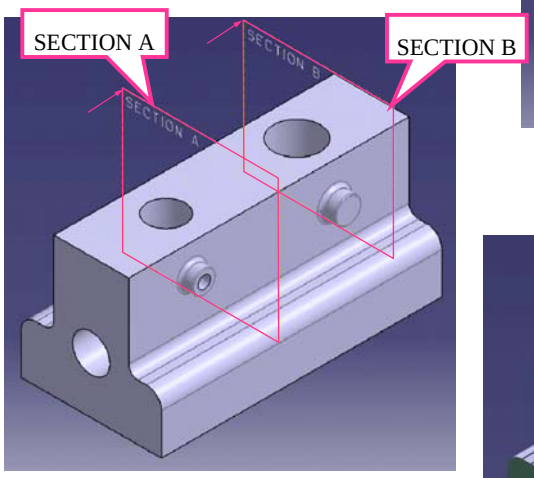

Isometric axonometric view

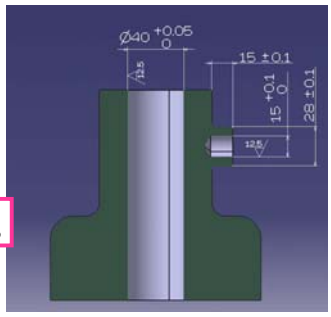

Section view A

Partially enlarged

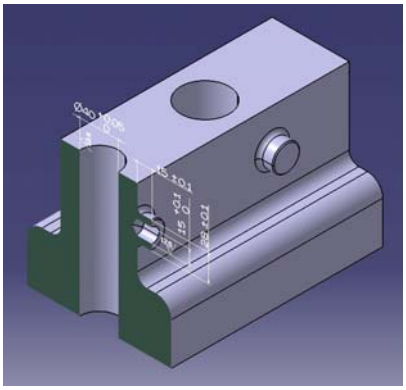

Rotated sectional view

Figure 4.3-4 Various views and sections

5 APPLYING ANNOTATIONS TO MULTIPLE GEOMETRIC FEATURES

5.1 Purpose

This chapter defines how to link annotations to multiple features.

5.2 Requirements

When annotating multiple disconnected features, the annotation must be linked to all of the relevant geometric features by the following recommended method.

a) When an annotation is linked to multiple features, the annotation must contain the number of linked features (see Figure 5.2-1 and Figure 5.2-2.)

b) When an annotation is selected, all of the related features are highlighted (see Figure 5.2-1 and Figure 5.2-2.)

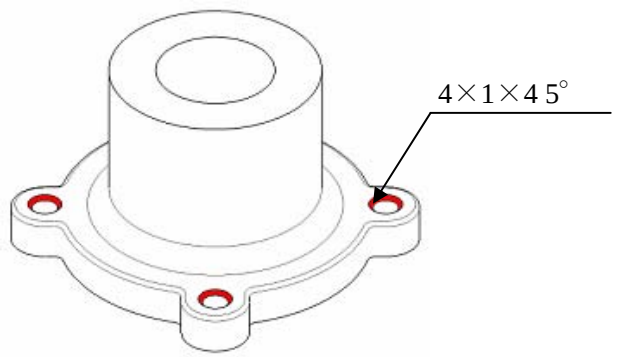

Figure 5.2-1 Example of a single annotation linked to multiple feature edges

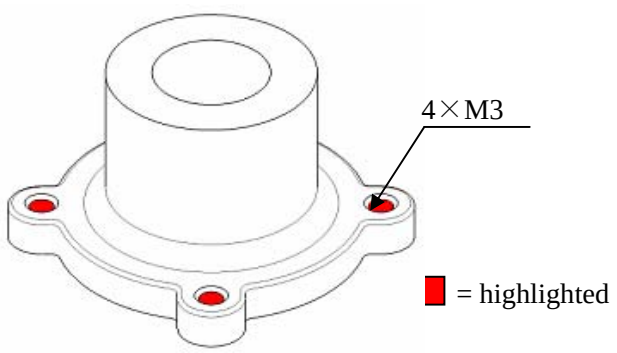

Figure 5.2-2 Example of a single annotation linked to multiple feature surfaces

The following method may be used if it is not possible to use the above method.

- The same annotation text is duplicated and applied to each of the multiple features.
- Multiple features are linked to a single annotation by multiple leader lines.

6 3D ANNOTATED PARTS AND ASSEMBLY MODELS

6.1 Purpose

The purpose of this chapter is to outline a method for applying 3D annotation to parts and assemblies.

6.2 Requirements

a) All parts must be 3D models (see Figure 6.2-1.)

b) All parts and assemblies should be designed in vehicle position using a common global coordinate system.

c) Multiple usage parts (e.g., engine, axles, starters, bolts…) may be designed in a local coordinate system instead of the global coordinate system.

d) 3D models must be created using surface or solid modeling. Solid modeling is the preferred method.

e) Necessary geometry representing product shape, like fillet surface and draft angles, must be represented in a 3D model. Specific details not specified in the 3D model (i.e., threads…) should be represented with annotations.

f) All parts or sub-assemblies in an assembly should be appropriately constrained.

g) All parts and assemblies must have part number and part name as attributes (see Figure 6.2-1.)

h) When annotations are created, they must be labeled so that they can be selected from a list in the history tree of the CAD system. The labels should identify the reason for the annotation.

i) If the assembly is shown, then only the assembly annotations should be displayed.

j) Defining geometry or position modifications made during the assembly process is allowed.

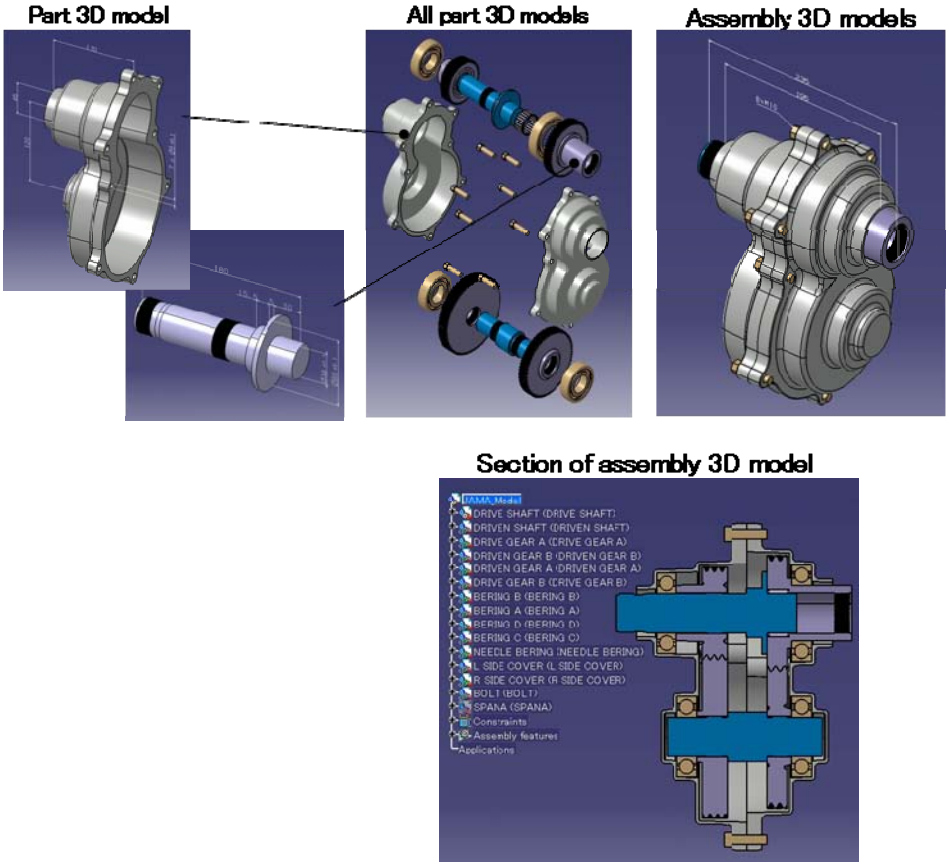

Figure 6.2-1 Assembly 3D annotated model

7 GEOMETRIC TOLERANCING OF 3D MODELS

7.1 Purpose

The purpose of this chapter is to describe requirements not covered in ISO 16792 sections 6.1 and 9.3, for attaching and displaying size values and plus/minus tolerances on a model.

7.2 Requirements

a) It is recommended that all parts be designed to the median when possible. (Reference ISO 16792 section 6.1.) This enables manufacturing to more easily use the original model for tooling development.

b) Even if the fit system is directed to the part, it is recommended that the part be designed to the median of the tolerance whenever possible. It is necessary to place the basic dimension and the tolerance class within parentheses ( ) behind nominal dimension when the geometry does not lie within the nominal tolerance zone (see Figure 7.2-1.)

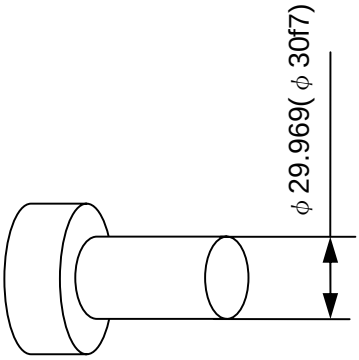

Figure 7.2-1 Example of annotation with geometry outside of tolerance

8 IDENTIFYING AREAS ON A 3D MODEL

8.1 Purpose

This chapter defines the method for indicating an area on 3D model surfaces. Areas can be identified by using surfaces, or lines and curves.

8.2 General Requirements

a) An area should be defined using surfaces or curves and/or lines on a 3D model (see Figure 8.2-1.)

b) All surface areas need to be identified with annotations that must also include a leader line (see Figure 8.2-1.)

c) The location of an area on a surface should be defined using dimension (see Figure 8.2-2.)

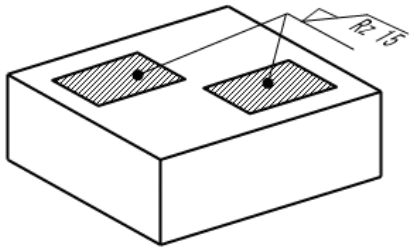

Figure 8.2-1 Annotations with leader lines

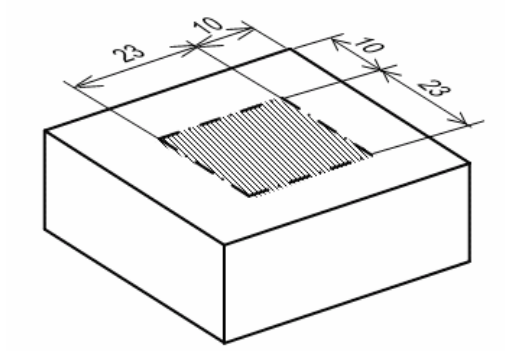

Figure 8.2-2 Location of an area

8.3 Identifying Areas Using Surfaces

The following are examples of how to identify areas on a surface.

a) To identify different areas on a surface, separate them by color, hatching, or texture (see Figure 8.2-1.)

8.4 Identifying Areas Using Lines and Curves

The following are examples of how to identify areas using lines and curves.

a) Curves identifying an area can be expressed as thin and short dashed lines (see Figure 8.2-2.) In the case of datum targets, express boundaries as a thin and double-dashed line as described in ISO 5459 (see Figure 8.4-1.) When using hatching in the identified area, the boundaries of the area can be expressed as solid lines (see Figure 8.2-1.)

b) A limited line may be expressed with bold and short dashed lines (see Figure 8.4-2.)

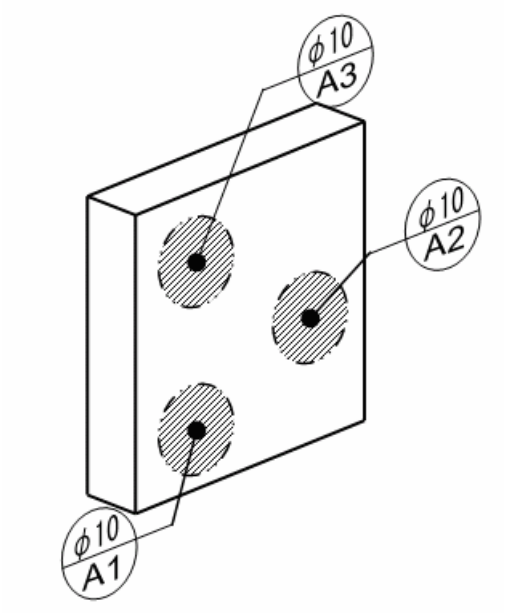

Figure 8.4-1 Datum targets

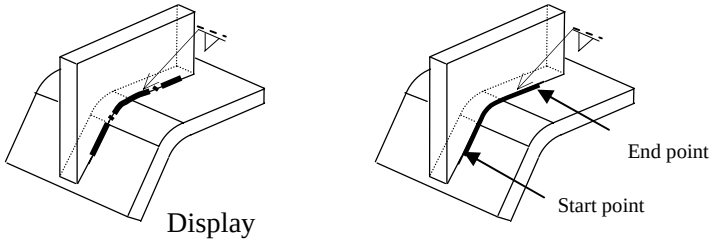

a. Limited line

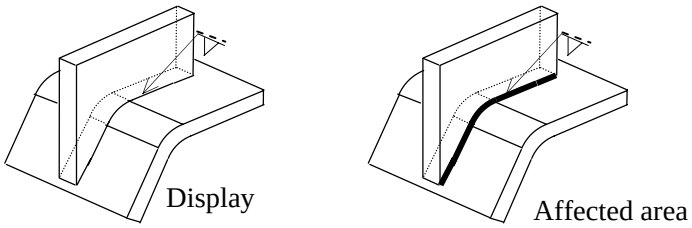

b. Limited boundaries

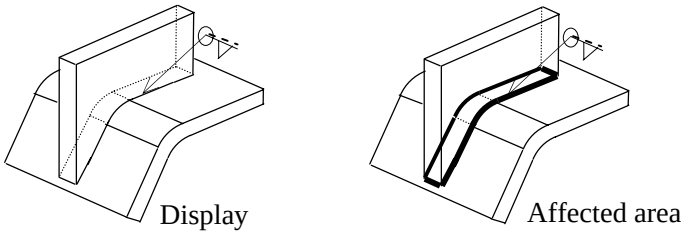

All boundaries

Figure 8.4-2 Curves identifying an area

9 REPRESENTATIONS OF DESIGN CHANGES

9.1 Purpose

This chapter describes the method for representing design changes in a 3D annotated model.

9.2 Requirements

a) As design changes are made, changed 3D geometry and annotations should be clearly identified.

b) Presentation of design changes should be made according to company policies through the addition of appropriate symbols, annotations, or both (see Figures 12.2-1, 12.2-2, and 12.2-3.)

c) Only the latest change should be documented at each release according to company policy (for example, approved design stages.) References to previous changes should be removed.

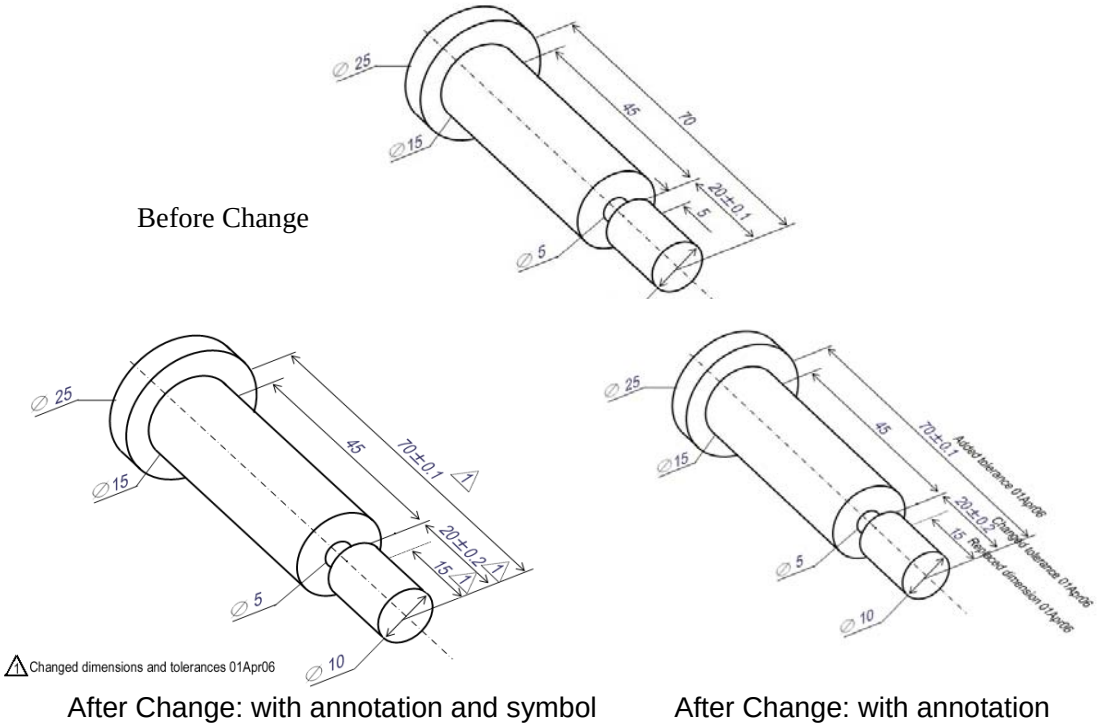

Figure 9.2-1 Examples of design changes using symbols and annotations

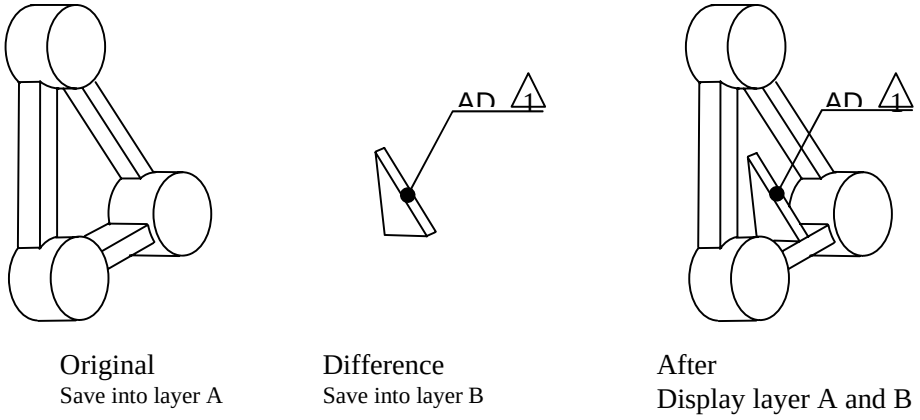

Figure 9.2-2 Examples of design changes using different layers

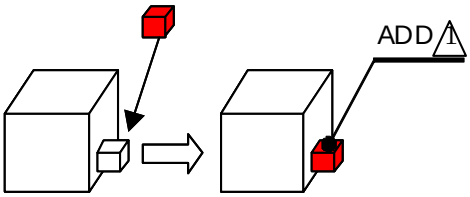

Figure 9.2-3 Examples of design changes using any combination of annotation, highlighting, and color.

10 SURFACE TEXTURE CREATION AND DISPLAY

10.1 Purpose

This chapter defines how to apply surface texture.

10.2 Requirements

a) Refer to ISO 1302 for applying surface texture symbols, except as noted below.

1. All symbols and notes should be placed away from the part using leader lines or directly on the surfaces they apply to (see Figure 10.2-1.)
2. Do not express surface texture symbols on a dimension line (see Figure 10.2-2.)

In all cases, symbols must be linked to the surfaces that they apply to unless the symbols are in the general notes or management data.

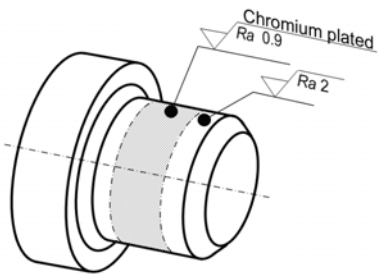

Figure 10.2-1 Example of the surface texture indication by 3D model

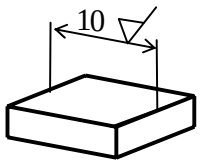

Do not use

Figure 10.2-2 Example of symbols on dimension lines —NOT RECOMMENDED

11 INDICATING MATERIAL THICKNESS AND DIRECTION FOR NON SOLID MODEL PARTS

11.1 Purpose

This chapter describes how to indicate thickness and the direction of thickness for thin walled parts.

11.2 Requirements

a) This method should be used only if the part being described has a small number of easily identifiable thickness changes.

b) Material thickness (constant or variable) should be shown using annotations in one of two ways:

1. Cut a section and show the material thickness in the section (i.e., transitional surface areas) (see Figure 11.2-1.)

2. Show material thickness using an arrow off the surface and text to define direction and thickness (see Figure 11.2-2 a-b.)

c) Normal material thickness may be shown in management data.

d) Thickness fluctuations should be identified by using annotations (see Figure 11.2-1.)

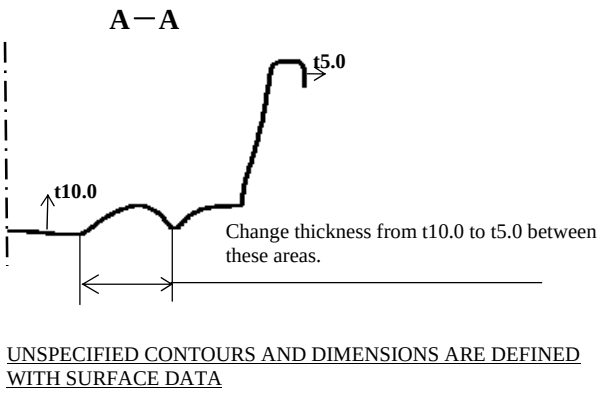

Figure 11.2-1 Sectional example for showing material thickness and direction

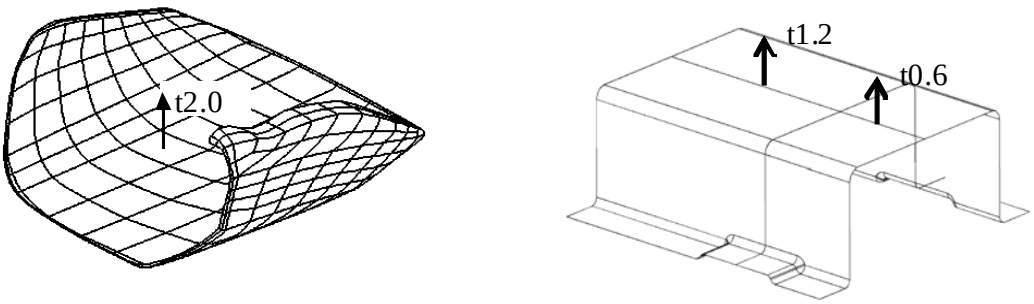

a. b.

Figure 11.2-2 Examples of the notation of thickness and the direction of thickness

12 SIMPLIFIED REPRESENTATION OF STANDARD PARTS

12.1 Purpose

This chapter specifies the methods for simplifying shapes (simplified representation) for standard parts such as gears, screw threads, knurls, splines, bearings, etc., when used in 3D models.

12.2 General Requirements

a) The simplified representation (see ISO 16792 section 5.2.4and Figures 12.2-1 to 12.2-10) applies to those parts whose specifications are standardized and addressable by standard names or numbers, and when it is not necessary to show the exact shapes and details of the parts (for example, for a screw thread, the outermost shapes shall be indicated for both the hole side and the shaft side (see Figures 12.2-1, 12.2-2, 12.2-3, and 12.2-4.) When simplified representation is used for a chamfer edge on a nut and head or configuration of a screw tip or incomplete thread and escape groove…, use annotation to describe the geometry not shown (see Figure 12.2-3.)

b) The standard number(s) (ISO and/or company standard) for standard parts shall be called out using annotations at the simplified representation areas of the 3D model (see Figure 12.2-7 and Figure 12.2-8.)

c) Each simplified representation should contain a description (annotations, attributes…) about what is being simplified (screw, etc.) and how it is simplified (which color, texture, etc.)

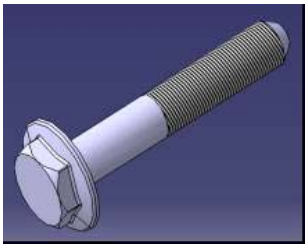

Figure 12.2-1 Screw thread

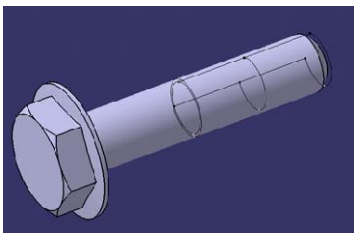

Figure 12.2-2 Root circle diameter of screw indicated by line

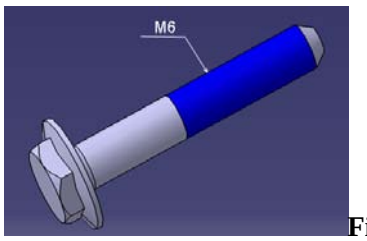

Figure 12.2-3 Thread indicated by coloring

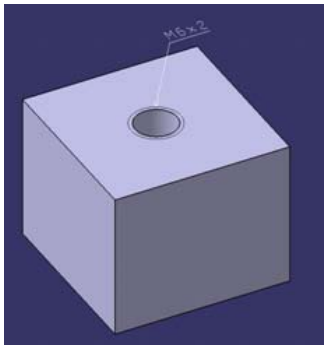

a. Normal view

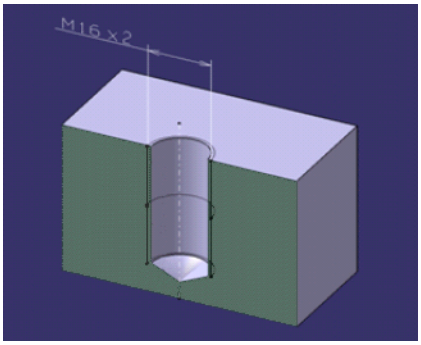

b. Sectional

Figure 12.2-4 Example of representation of internal thread

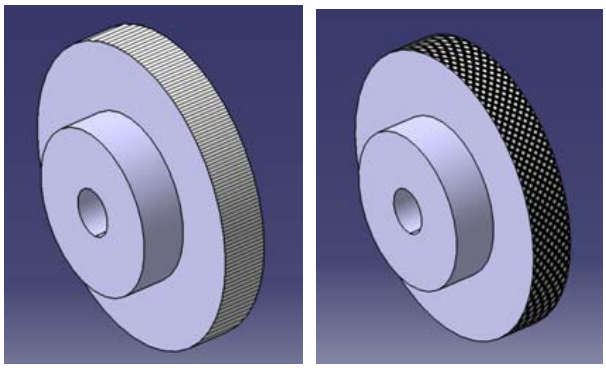

a. Knurl indicated by texture mapping

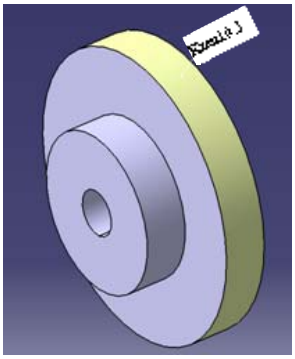

b. Knurl indicated by coloring

Figure 12.2-5 Example of representation of knurl

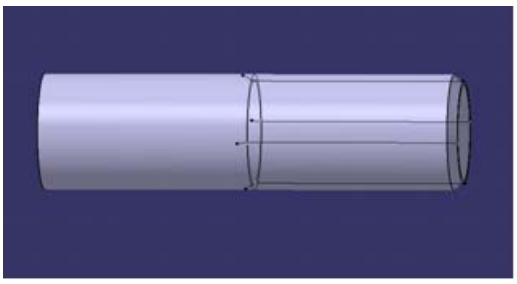

a. Appearance view

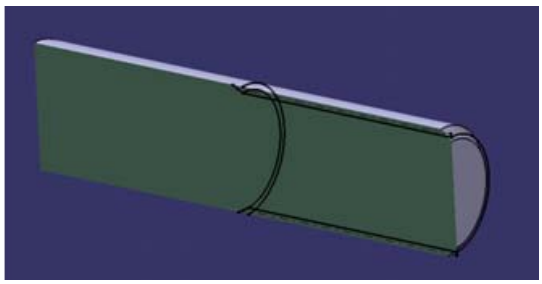

b. Sectional view

Figure 12.2-6 Root circle diameter on the shaft side of the spline indicated by a line

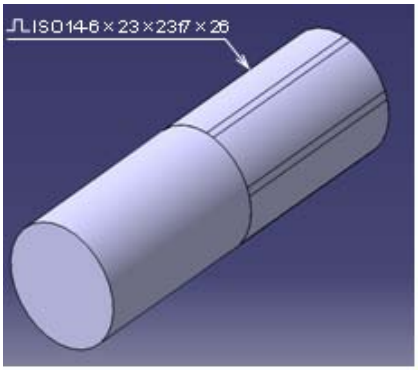

Figure 12.2-7 Spline

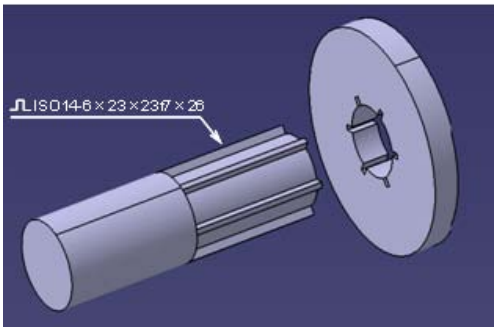

Figure 12.2-8 Actual shape of the spline

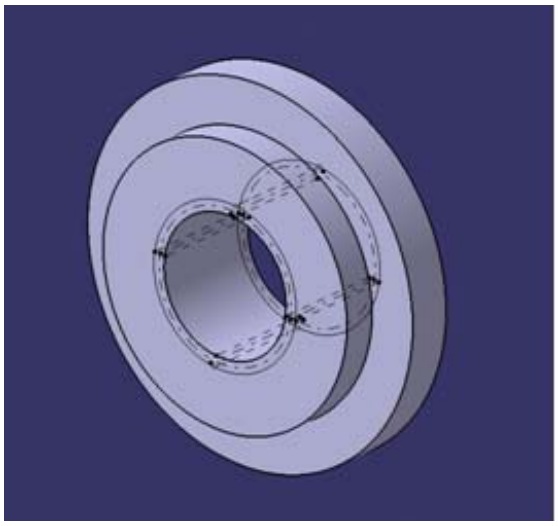

a. Appearance view

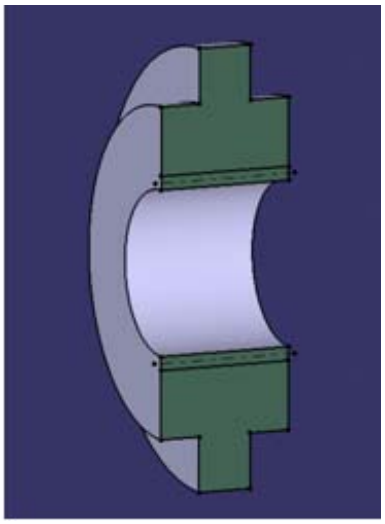

b. Sectional view

Figure 12.2-9 Root circle diameter on the hub side of the spline indicated by a line

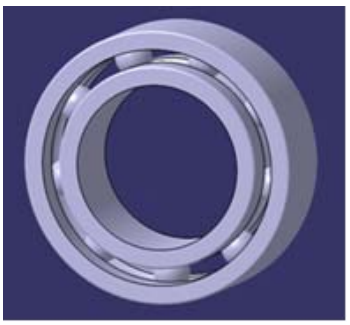

Figure 12.2-10 Bearing

13 WELDING CREATION AND DISPLAY

13.1 Purpose

This chapter defines how to apply welding properties to 3D annotated models.

13.2 Requirements

a) Follow company-specific policies for representations of weld symbols.

b) Whenever possible, the annotation should be directly linked to the features that it applies to (see Figure 13.2 2 and Figure 13.2-3.) See chapter 6.2-1 for linking annotations to geometry. If it is not possible to directly link the annotation to the feature, the annotation leader should clearly identify the location of the weld it applies to (see Figure 13.2-1.)

c) The welding information may also be contained in an attribute that is displayed separately or as an annotation (see Figure 13.2-2 and chapter 3.3.)

d) The 3D model should show the parts shape and welding shape (see Figure 13.2-3.) When a 3D model does not show the welding shape, then a simplified welding shape may be used (see Figure 13.2-4.)

e) The 3D welding shape must be created independently from other geometry (see Figure 13.2-5.)

f) It is <u>not</u> recommended to use ISO 2553 Welded, brazed and soldered joint symbolic representations on drawings as described in Figure 13.2-6.

g) There are two options for defining weld locations, as shown in Figure 13.2-7.

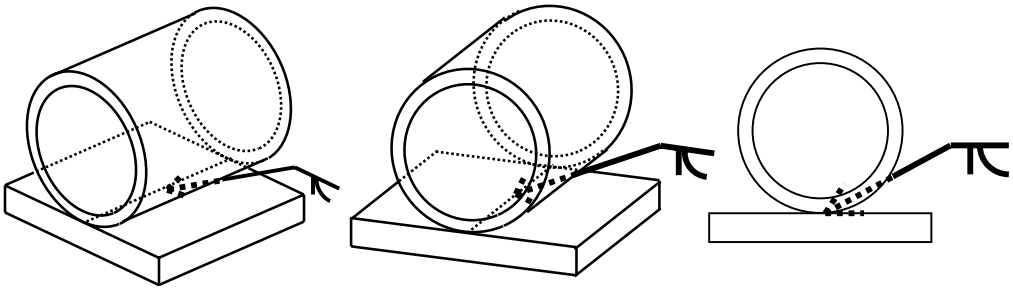

In this case the arrowhead touches the model geometry. Even if the model is rotated, the arrowhead can be hidden by the other model.

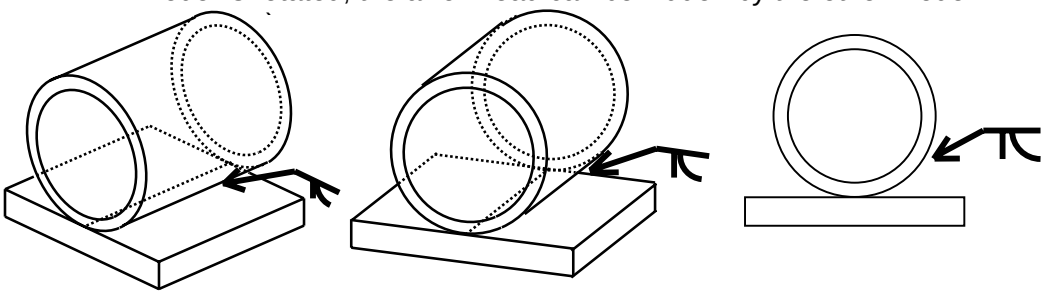

Figure 13.2-1 Case where arrow cannot touch on weld area

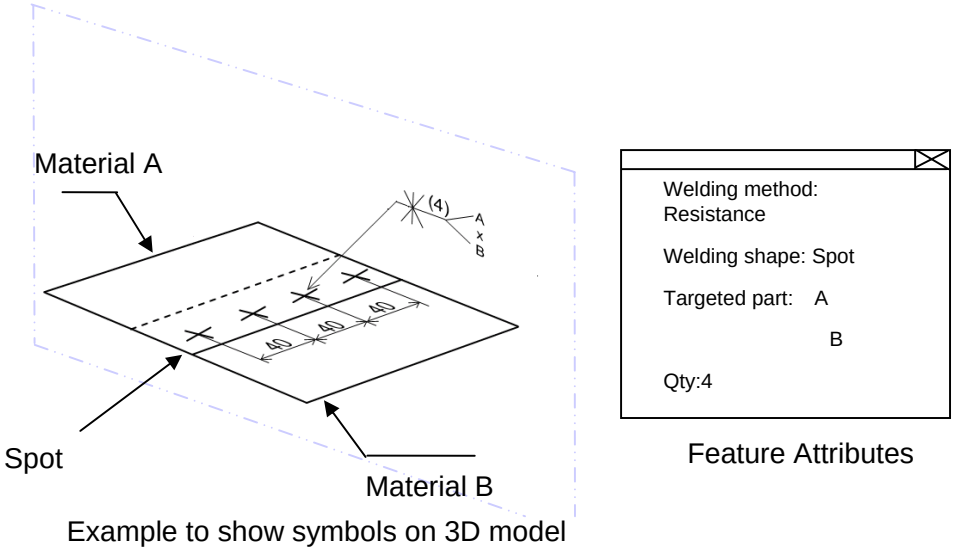

Figure 13.2-2 Example of resistance and spot welding

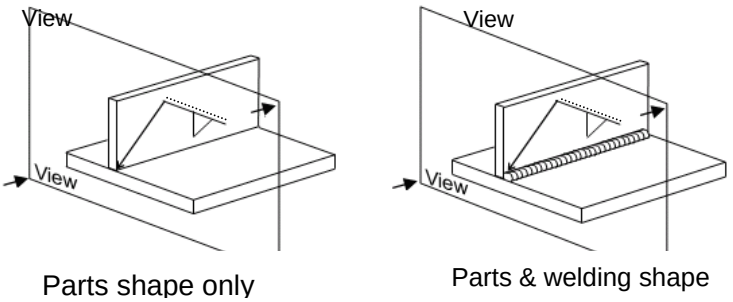

Figure 13.2-3 Examples of welding shape notation in a 3D model

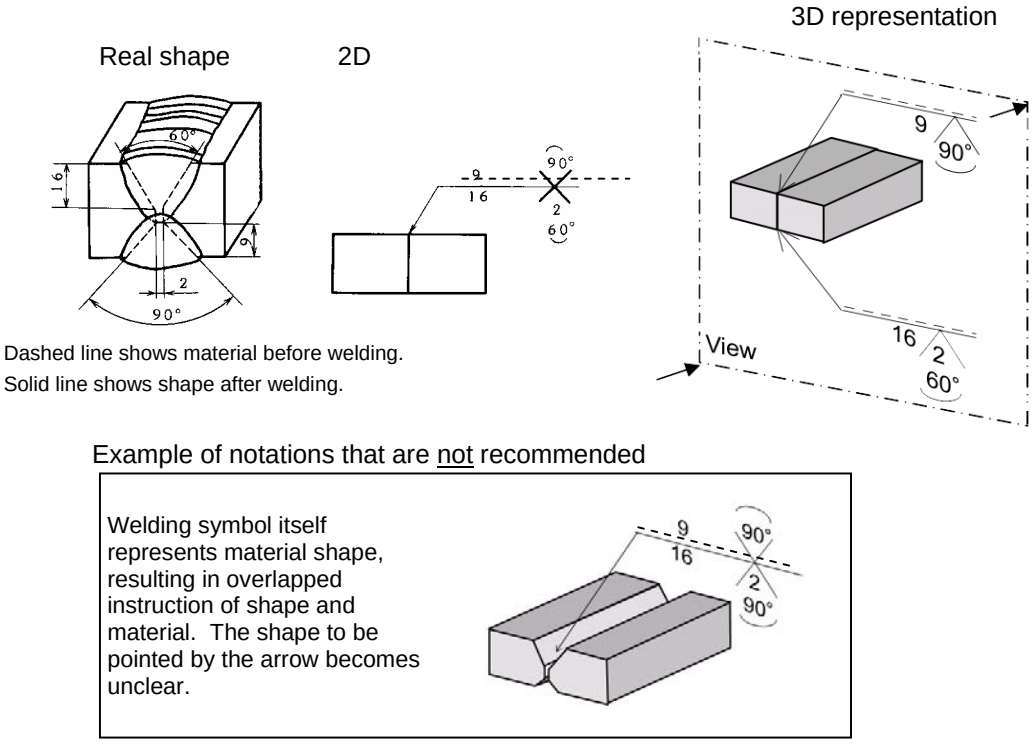

Figure 13.2-4 Examples of welding material shape annotation

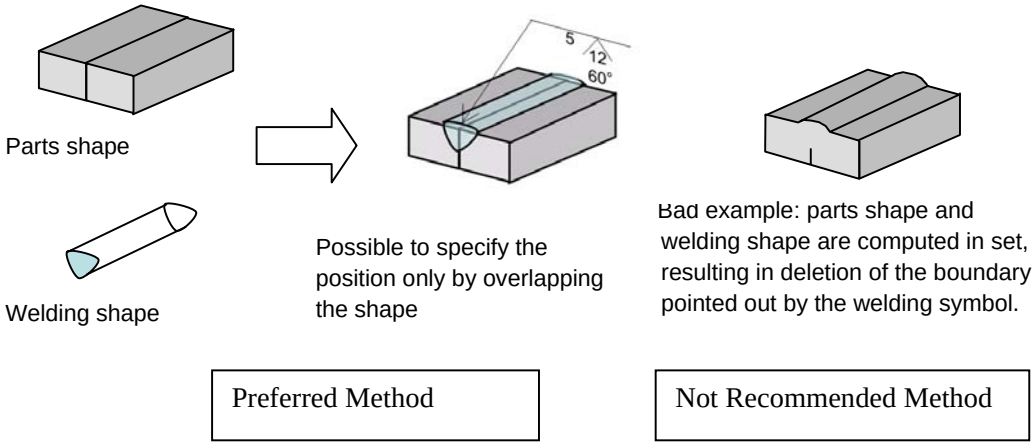

Figure 13.2-5 Notation of material shape and welding shape

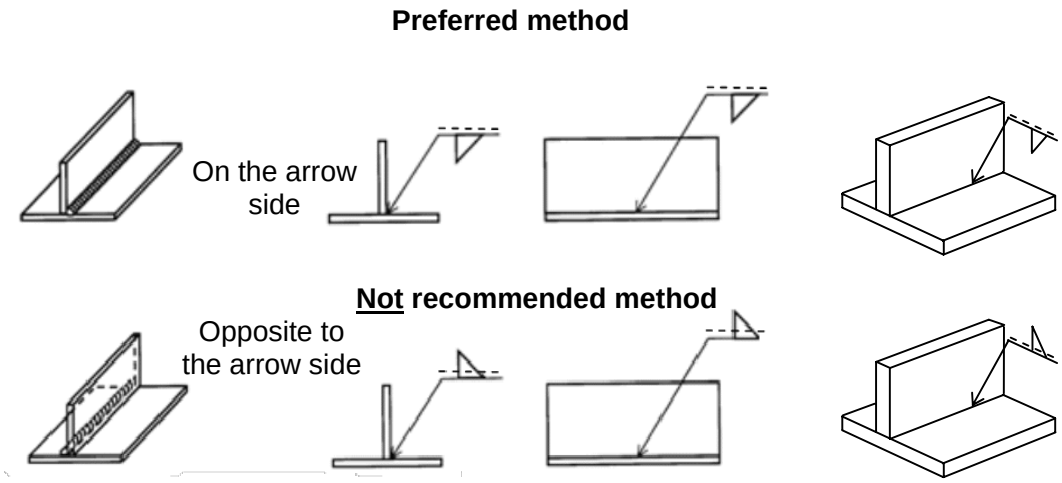

Figure 13.2-6 Recommended method for a single side weld

Option #1:

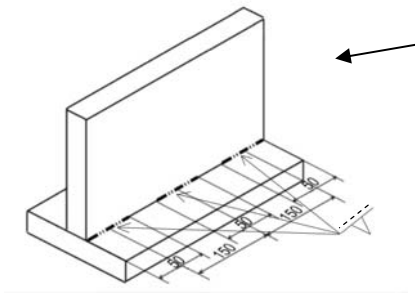

Dimensions to be notated for width and pitch. Quantity needs to be put to the symbol.

Option #2:

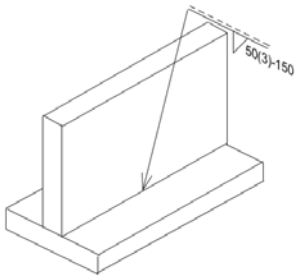

Figure 13.2-7 Examples of welding area notation

14 SEALER CREATION AND DISPLAY

14.1 Purpose

This chapter describes the method for displaying and annotating sealers in a 3D model. 'Sealer' here generally refers to non-metal materials that are applied to parts or between parts for such purposes as rust prevention, adhesion, reinforcement, sealing, and appearance.

14.2 Requirements

a) Use annotations to define sealer materials and other information (see Figure 14.2 1.)

b) The sealer shape should fill the space between the parts they are sealing (see Figure 14.2 2 and Figure 14.2 3.)

c) When sealer shapes are not used, then boundaries of sealer area along with sections may be used to define the shape of sealer (see Figure 14.2 3.)

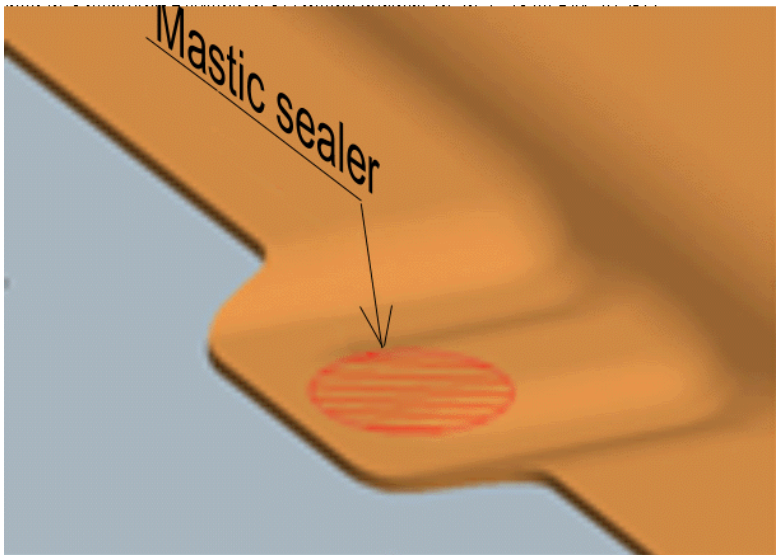

Figure 14.2-1 Sealer instruction

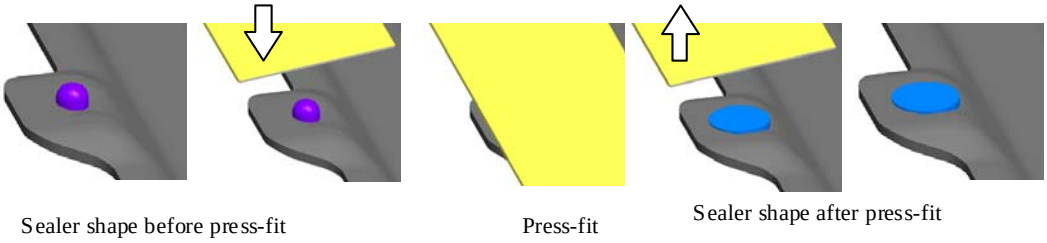

Figure 14.2-2 Applied shape and area described on 3D models

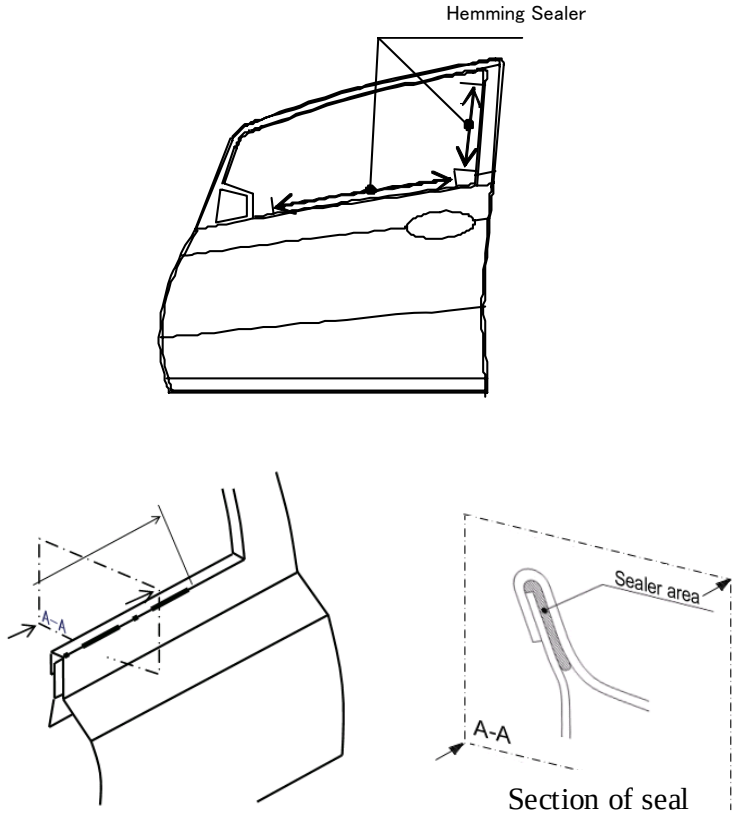

Figure 14.2-3 Sealer instructions using a section

15 COLOR CHARACTERISTICS OF A MODEL

15.1 Purpose

This chapter defines color characteristics that are not described in ISO 16792.

15.2 Requirements

a) When possible, use only a single color per part. Multiple colors on a single part should be used only to indicate product characteristics or area definitions as described in chapter 8. You may use multiple colors on parts when required, as noted in the previous chapters (i.e., part design change, machined surfaces, surface texture…).

b) Parts within an assembly that are close to each other should be of different and contrasting colors, when possible, for easier differentiation during viewing.

c) Parts should be created in a color that contrasts with the background color. Parts should never be colored Black or White because these colors are often background colors on computer screens.

d) Part colors should not be overly bright as these will often look washed out on a monitor.

MAINTENANCE REQUEST

If you find an error or other changes that should be made to this publication, please complete this form and return it to the proper address below.

Name of Submitter: Date:
Company:
Company Address:
Phone: Fax: E-mail:
CHANGE REQUEST (Use additional sheets if necessary)
Page Number of Change:
Document Currently Reads:

Recommended Changes/Should Read:

Recommended Additions:

Reason for Change:

Signature of Submitter:

Submit This Change Request to Your Organization at the Address Listed Below:

Automotive Industry Action Group
26200 Lahser Road, Suite 200
Southfield, MI 48033
USA
Phone: (248) 358-3570
Fax: (248) 358-3253
Web: www.aiag.org

Odette International Limited
Forbes House
Halkin Street
London SW1X 7DS
UK
Phone: +44 207 344 0277
Fax: +44 207 245 6093
Web: www.odette.org

Japan Automobile Manufacturer's Association, Inc. (JAMA)
Jidosha Kaikan,
1-30, Shiba Daimon 1-chome, Minato-ku
Tokyo 105-0012
Japan
Phone: +81 3-5405-6130
Fax: +81 3-5405-6136
Web: www.jama.or.jp

Japan Auto Parts Industries Association (JAPIA)
Jidosha Buhin Kaiken, 5th Floor, 1-16-15
Takanawa, Minato-ku
Tokyo 108-007
Japan
Phone: +81 3-3445-4211
Fax: +81 3-3447-5372
Web: www.japia.or.jp

2010.9.16　小形　充生

3D図面独自のPDQ項目候補例

区分	問題事例
●テキスト関係	・文字抜け
	・文字化け
	・位置ズレ（3次元）
	・反転
	・基準ズレ
	・はみ出し
	・フォント変化
	・文字高さ変化
	・文字縦横比変化
	・文字間隔変化
	・改行間隔変化
	・無コード化　（形状要素）
●寸法関係	・寸法抜け
	・補助線変化
	・基準ズレ
	・企画に合わない表現
	・位置ズレ（3次元）
	・向きズレ
	・形状連携解除
	・無意味化　（形状要素）
●基準関係	・位置ズレ（3次元）
	・記号化け
	・無意味化（形状要素）
	・アノテーション関連解除
●断面関係	・塗りつぶしエリア変化
	・塗りつぶし種類変化
	・陰線処理解除・化け

区分	問題事例
●線種関係	・線種変化
	・太さ変化
●View関係	・View位置変化（3次元）
	・反転
	・移動
●実要素	・3D連携解除
	・（Shapeと同様）
●Detail関係	・実要素化
	・抜け
	・位置ズレ（3次元）
	・反転
	・回転
●シンボル関係	・実要素化
	・抜け
	・位置ズレ（3次元）
	・反転
	・回転
●エリア関係	・エリア解除
	・エリア変化
	・塗りつぶし線種変化
	・アノテーション関連解除

第4回委員会（12月14日）

平成 22 年度　第 4 回 PDQ 国際標準化要件検討委員会

1. 日　時　　2010 年 12 月 14 日(火)　14 時－17 時
2. 場　所　　機械振興会館 4 階　JIPDEC 第 4 会議室
3. 議　題　　・PDQ拡張規格内容(GD&Tを含む)の検討状況
　　・その他

4. 配布資料

- PDQR10-04-01：平成 22 年度第 3 回 PDQ 国際標準化要件検討委員会　議事録
- PDQR10-04-02：GD&T　三富委員インプット
- PDQR10-04-03：JEITA における PMI/GD&T 検討状況（松永）
- PDQR10-04-04：PMI Errors Analysis - NIST TDP team response（Doug Cheney）
- PDQR10-04-05：Certification of 3D MBD Data（NIST）
- PDQR10-04-06：PDQ-S Edition 2 New Quality Criteria (PowerPoint) (Doug Cheney)
- PDQR10-04-07：PDQ-S Edition 2 New Quality Criteria (Excel)（Doug Cheney）
- PDQR10-04-08：Questions/Comments to Mr. Doug Cheney's Proposal（大高）
- PDQR10-04-09：CADdoctor 上の 生産要件チェック項目（相馬）
- PDQR10-04-10：GD&T data の"データ品質検査"規格に関する初期検討（石川）
- PDQR10-04-11：Current Status of TC 10 & TC 213 Standards for Mechanical Products（石川）

以　上

平成 22 年度　第 3 回 PDQ 国際標準化要件検討委員会　議事録

日　時：9 月 16 日(木)　14:00－16:40
場　所：機械振興会館 4 階　JIPDEC 第 3 会議室
出席者：委員長　大高哲彦(NUL)
委員　平岡弘之(中央大)、小林一也(富山県立大)、田中文基(北海道大)、相馬淳人(エリジオン)、坂本千秋(MER)、石川義明(MER)、田中敬昌(DIPRO)、多賀和春(ホンダ)、小形充生(スタンレー電気)、岩壁清行(NDE)、三富一弘(MHI)
事務局　鈴木　勝(JIPDEC/DUPC)
（順不同、敬称略）　13 名

配布資料：
- PDQR10-03-01：平成 22 年度第 2 回 PDQ 国際標準化要件検討委員会　議事録
- PDQR10-03-02：PMI Errors and Corrections（D. Cheney, 改訂版）
- PDQR10-03-03：PMI Errors Types（D. Cheney, 改訂版）
- PDQR10-03-04：PMI Errors 整理（PDQ 規格開発委員）
- PDQR10-03-05：SASIG 3D Annotated Model Standard（SASIG）
- PDQR10-03-06：3D 図面独自の PDQ 項目候補例（小形）

議　事：
1. 配付資料の確認（事務局）

2. 前回議事録の確認（大高委員長、PDQR10-03-01）
- Boeing 社の Mr. Zuray からは追加の技術資料がまだ来ていない。

(事務局)前回会議後に案内したように、発行された EN9300 文書は日本規格協会から購入できるが、この委員会には図書購入予算がないので、必要な組織で購入していただきたい。

→(大高)LOTAR Executive Summary にある技術資料の入手希望があれば、自分が Boeing 社のルートで要望するので、必要なものを知らせてほしい。

- 拡張 PDQ の枠内で GD&T に取り組むかどうかは、次の点に依存する。
  ・GD&T が技術的に見て規格化を行うのに適切な状態まで成熟しているか。
  ・成熟しているとして、最小セットを実現するまでにどれだけのリソースが必要なのか、またそれが我々のリソースの範囲に収まるのか。
  これらについて、Vico Equense 会議で議論する。
- NIST が検討している生産準備対応の GD&T の要件について Doug Cheney に聞く。

(三富)航空機業界では CATIA のバージョンまで指定されてデータ交換を行っているので、大きな問題はないと思われるが、前回の GD&T エラーの資料を自社の設計者に見せたところ、こういう整理は無駄にはならないということであった。ただしアルミやチタンの部材についてはこれでよいが、最近利用が増えている複合部材については要件が異なるかもしれない。

(石川)前回議事録の 10 章の最後の部分に「航空機業界の CAD は CATIA で統一されているので」と書かれているが、エンジンメーカでは事情が異なるので、「機体メーカでは」と限定した方がよい。

→(事務局)前回議事録を改訂して再配布する。→9/29 に改訂版を配布済み

- 11 章の記述には不適切な部分があるかもしれないので、本日多賀さんから最新の状況を説明してもらってから見直す。

3. PMI Errors の改訂版と整理資料（大高委員長、PDQR10-03-02, -03, -04）
- PDQR10-03-03 は、PDQR10-03-02 の項目を実務の観点で分類したものであるが、本来の GD&T の問題点の分類にはなっていない。
- PDQR10-03-02（前回の資料 PDQR10-02-09 の改訂版）では誤りと正解が提示されているが、必要な幾何公差がすべては表示されていないものがあり、正解が理解できないものもあるので、Vico Equense 会議で不明点を Doug Cheney に聞く。
- 今回の整理（PDQR10-03-04）の目的は、コンピュータプログラムでどういうアルゴリズムを

組めば自動的にチェックできるかを考えるためである。

- このの資料は米国 DoD の要件として書かれているが、そのための特異性がないか、また SASIG/JAMA の DEV とどこが異なるのかを教えてほしい。

(田中敬昌)JAMA は GD&T だけに特化して検討はしていないので、参考にはなるかもしれないが、GD&T 全体の検討のベースにはならない。

- JAMA も参加している STEP AP242 のプロジェクトで STEP の GD&T を書き直そうとしているので、その結果が今回の資料とどのように関係するのかに関心がある。
- JAMA の 3D 図面の担当者にこの資料を見せて、自動車業界の要件を聞きたい。設計実務者の意見を求める必要があるが、設計業務では寸法公差から幾何公差に移行しているとすると、こういう資料が役立つのではないか。

(事務局)そのためにはどのように働きかければよいか。

→(田中敬昌)DE 部会の下部の規格展開分科会の責任者であるホンダの座間さんに依頼するのがよい。

→(事務局)会議後に大高委員長が座間さんに依頼して、10/8(金)に会合をもつことになった。

- 同様に SJAC でも今回の資料を検討してほしい。

(三富)内部で展開して意見を求める。

(石川)Part 59 では erroneous_data と inapt_data に分類しており、前者は CAD のプログラムミスで発生し、後者は設計者の作業ミスで発生する。それを考えると、前回の岩壁さんの見方（CAD がまっとうならこんなことは起きない。設計者の側ではこんな間違いはしない）が当てはまらない可能性がある。本来起こりえないことが、プログラムのミスと作業者のミスで起こり得るので、その両方を考慮して検討してほしい。言い換えると、PDQR10-03-02 の誤りと正解の差が明確でないことがある。

→(岩壁)社内ルールで対処している部分があるので、それをエラーとして排除されると困る。

→(石川)規格をゆるめて実用化するのはよいが、ISO 規格を作る場合は ISO のルールに従うしかない。PDQR10-03-02 の方向性は間違っていないが、GD&T でも erroneous と inapt があることを前提とする必要がある。

→(大高)プログラムのミスで erroneous は発生しうるが、論理的なチェックが可能である。一方、inapt に対応するのは難しいので、問題点の分類をしたい。

→(相馬)この資料には、実務からだけではなくて、規格書から頭で考えて書いたと思われるものがある。

→(小形)CAD でこんなエラーが出たら、設計者が自分で修正する。

- **10 月の SC4 会議の前に疑問点を出してもらえば、会議で検討できる。**

(事務局)参考文献として ASME の規格がいくつか提示されているが、どれを入手すればよいか。

→(相馬)14.41 が 3D で、その中で 2D の 14.5 を参照しているので、この両方が必要である。

→(大高)その他のものについては、Doug Cheney に確認すればよい。

(大高)JAMA にはこの分野の間違い集がないか。

→(田中敬昌)JAMA としてはないが、各社で作っているかもしれない。

→(小形)当社では自由曲面が中心なので、これらの GD&T にはなじみがない。

4. SASIG 3D Annotated Model Standard 紹介（田中敬昌委員、PDQR10-03-05）

- 日本語版があるので別途提供できる。

→(事務局)会議後に田中敬昌委員から入手して、9/29 に委員に配布した。

- この資料は AIAG が作成したが、JAMA の数社が出した要件をとりまとめたものである。

(大高)16 ページの Figure 1.2-1 のように対象範囲が広いのか。

→(田中敬昌)従来 2D で表現していたものを 3D に移行するためには、どうすればよいかをまとめている。ビューアと CAD のベンダには、それぞれに関連する部分を抜き出して要件として出しており、まだ実現できていないことがほとんどである。

- ISO 16792 でできることは 16792 参照と書くことによって整合を図っているが、それ以外に 16792 に対する要望がある。

(相馬)この資料を理解するためには 16792 の知識が必須で、それ以外に JAMA の要望を加えたものが全体になる。

(大高)ここで前提としている featureing はどの程度のものか。
→(相馬)28 ページでは、feature model のデータ構造がなくてもできることを書いてある。
(大高)GD&T と重なるところはあるが、GD&T の要件資料とはいえない。もっと詳しい技術資料があるか。以前に永井さんから聞いたのはもっと高度な印象であったが。
(田中敬昌)3D 画面にすべての annotation を表示すると分からなくなるので、回転方向によって表示対象を切り替えるとか、CATIA のキャプチャごとに annotation を表示するとか、annotation が重ならないように自動判定するとかの要件を示している。
(大高)各社の共通部分が大きければよいが、OEM ごとに要件が異なり、ベンダごとに実装のレベルが異なると混乱するのではないか。
→(田中敬昌)各社は PDQR10-03-05 を基に、固有の内容を加えてそれぞれの仕様書を作って運用している。
(大高)主要なアプリケーションが書かれているが、もっとあるのでは。

- 3D 図面の ISO 化については、当初提案先として考えていた TC10 の動きがよくないので、AIAG が SC4 に切り替えることを考え始めたようである。

→(大高)来週の PPC telecon でこの件を話題にするかもしれない。

- JT の ISO 化の件は、SASIG は特定のベンダの仕様を支持しない方針である。Oscar Rocha が SC4 で 3D Visualization プロジェクトを担当していたことも SASIG では疑問に思われていた。10 月の SASIG 会議（SC4 会議の翌週）に ProSTEP の人から JT の話をしてもらうように依頼している。

5. 3D 図面独自の PDQ 項目候補例（小形委員、PDQR10-03-06）

- これはビューア用に変換されたデータに関する考察である。単純に図面としてみた場合の問題と、データを活用する際の問題の両方が含まれている。

(相馬)これは返還前の元データと比較して分かるもので、比較プログラムの開発者にこれらをチェックできるようにという要件である。
→(大高)チェック項目としては分かるが、これをそのまま criteria にする気はしない。
→(小形)事例として参考にしてもらえればよい。
→(大高)変換プログラムの単純ミスではなくて、もっと意味が深いものがあるか。
→(小形)変換した際に、テキストデータはイメージデータではなくてテキストデータになってほしいが、今は読めればよいという方向である。
→(大高)「3D 連携解除」は本質的かもしれないが、問題なのか。
→(相馬)PMI で、あるデータを指示すると関連するデータをハイライト表示することなどが求められる。
(小林)どれが一番よく発生して、工数がかかるのか。
→(小形)比較するだけなら工数はかからないが、設計変更するとなると最初から作り直しになる。

6. PDQ-S を採用した PDQ ガイドライン V5.1 のベンダ実装計画の改訂版（多賀委員、資料を画面に表示して説明）

- JAMA でツールベンダと CAD ベンダに対する PDQ ガイドライン V5.1（PDQ-S を完全に包含）についての実装状況の調査を実施し、PDQ 項目ごとに実装済み／計画中／計画なしといった詳細な調査結果が揃った。ツールベンダ 3 社の内、2 社が来年前半までに対応する。CAD ベンダ（日本法人）は問題を理解していないようで、対応が期待できない。

(事務局)本日の資料に対応して、前回議事録の記述を改訂する。
→(事務局)9/29 に改訂版を配布済み

7. 次回の予定

- 日時：12 月 14 日(火)　14 時－17 時
  午前中に PDQ 規格開発委員会を開催する。

以上

2010.10.14
MHI 名航　三富一弘

前回の会議で、配布資料(PDQR10-03-02)のような Quality Check は各業界で有効か否か、また業界毎の何か差異はあるかというご質問がありましたので、「航空機機体製造業界」（以下当業界）としての一般的な意見を述べさせていただきます。エンジン業界の意見（IHI 殿）も、ご意見を頂けた範囲で盛り込んでおります。

（有効性について）
- 基本的には、こういったチェックは有効である。異なるメーカの CAD 間、或いは CAD→Viewer 変換の精度確認、CAD ツールのバージョン違いによるデータ変換差異の検出に有効である。

（業界毎の差異について）
- 当業界では、欧米のメーカ（ボーイング、エアバス）との関係が深く、特にボーイング等米国メーカとのデータ交換等で、ISO ではなく ASME をベースとした図面作成がなされる場合が多く、可能であれば ASME も検討の俎上に上げていただければ助かる。
- また、やはり今現在は機体製造業界は CATIA がデファクトスタンダードであり、暫くは CATIA を中心に考えていく必要があるという面も、多少他業界との違いと思われます。（国際標準とはそぐわないお話ですが、正直な当業界の事情というところです。）
- 航空機エンジン業界では、NX がデファクトスタンダードになっており、一部各種のインタフェースに関しては、CATIA へデータ変換をして情報交換をしているとのことです。
- それ以外は、特に当業界としての特有な事項はないと思われる。

（一般的な要求事項：長期データ保存に関し）
- 当業界はご存知の通り 70 年以上の長期に亘り（30 年程度の製造期間、その後の 40 年以上の運用期間含む）、製造した機体を維持・メンテナンスしていく必要があり、データの再利用性というよりは、まずは将来に亘りデータを正確に閲覧できるか（特に形状データ）が重要となります。長期データ保存用フォーマットに変換したデータが一部壊れてしまうなどの状況は好ましくありません。
- トレーサビリティが取れるかも重要なファクターであり、3D モデルだけではなく、やはり部品表と一対となって形態を管理しているという状況もあり、Part List と MODEL データは対で考える必要があると思われます。
- また、一番重要なのが FAA の指針として、耐空性証明がきちんと保持・証明できるかがキーとなってきます。FAA の指針に沿ったものであることが求められます。（欧米の有識者は、無論このあたりのことを念頭に考えていると存じます。特出しして要望していくお話ではありません。）
- 長期保存用のデータに変換する際のデータ変換時間も、大量のデータを維持する必要がある当業界では気にしたいところです。変換に時間がかかり、業務に支障を与えるようなデータフォーマット、項目/属性数ではなかなか利用につながりません。

（その他ご回答）
- 長期保存関係で NAS/EN9300 シリーズのどの枝番の標準を見てみたいか検討したところ、まずはオーバービュー（形状データ）としての-100、-110、-115 あたりが有効ではないかと思われる。
- 形状以外では、部品表（Part List/Part Tree 或いは BOM 関係）のオーバービューもあればこれも見てみたい。

以上、宜しくお願いいたします。

JEITA における PMI/GD&T 検討状況

2010 年 12 月 10 日
㈱日立製作所　松永三夫

JEITA　三次元 CAD 情報標準化専門委員会における、PMI/GD&T 関連の検討状況を報告いたします。

１．　３D 単独図ガイドライン Ver2.0

(ア) ガイドラインの見直し改訂（JAMA 引用部分の JEITA オリジナル化）

(イ) 組立情報関連ガイドラインの追加

① 部品構成情報を持つ。

② 構成に必要な部品が 3D モデルと製品特性にある。

③ 組立に必要な情報を属性、アノテーションとして持つ。

④ 構成する部品形状は組立が完成している状態が基本。部品形状を変形させるも可。

⑤ 基準を明確にするため座標系とデータムを持つ。

（ウ）2011 年 2 月に Ver2.0 発行予定

２．　3 次元データ活用分科会活動

(ア) 3 次元 CAD 機能評価

① ガイドラインに基づいて 3D 単独図が表現できることを確認する。
CATIA、Pro/ENGINEER、NX、SolidWorks について機能評価。いずれも機能不足。

(イ) 金型データ連携

① 金型業界が 3 次元データとして受け取り可能な３D 単独図表現の標準化を模索。
日本金型工業会と連携し、具体的な 3 次元モデルを利用して検証中。

(ウ) 3 次元測定連携

① ３D 単独図データを利用した自動測定に向けて、３D 単独図表現の標準化を模索。
産総研、非接触測定器メーカと連携。セミナー、意見交換などを実施。

(エ) 長期保存ルール検討

① PDQ-R 資料から LOTAR 取組みを紹介。PDQ-R が規格書を入手することに期待。
現状は勉強会レベルであり、ルール作成スケジュールは未定。

３．　幾何公差推進分科会(仮称)の立上げ

図面のグローバル化対応のため、寸法・公差の記入を寸法公差方式から幾何公差方式に移行する必要がある。日本国内における幾何公差の普及率は、凡そ１割。それも大企業のみ。
JEITA が幾何公差を推進することで日本国内に幾何公差普及の契機とするのが狙い。

(ア) 幾何公差を推進する上での課題

① 幾何公差教育が必要。(設計者だけでなく、サプライヤ側にも必要)

② ISO、ASME で解釈が異なる。(独立の法則、テーラーの原理)

③ 3 次元 CAD における表記機能が不足している。（データム、基準座標など）

④ 寸法記入省略の必要性。
全ての寸法公差を表現すると図面が煩雑で読めない。3 次元モデルから測定できる部分は表記を省略する等の寸法表記削減対応が必要。

(イ) 現在、準備会を設置し、利用状況と運用課題を調査中。2011 年 4 月に分科会を発足予定。

以上

PMI Errors and Violations from a Quality Perspective - PMI Errors 1

		a. Requirements for target shape representation	b. Requirements for GD&T representation	c. Requirements on the relationship of target shape and GD&T	d. Requirements for GD&T presentation	Memo	TDP Validation Team Response
1	Type Errors: Missing Diameter Symbol in Size Dimension	Featuring	Well grouped representation	Appropriate relationship between target feature and GD&T data	* Appropriate dimension symbol shall precede(diameter symbol in this case		
a	Directly toleranced dimension use error	Same as 1-a.	Same as 1-b.	Same as 1-c.	* Basic dimension(dimension with frame) shall be used.	The reason that dimension with frame shall be used is not clear with given data.	See ASME 14.41-2003 3.1.1 (a) (4)
b	Missing R or CR	Same as 1-a.	Same as 1-b.	Same as 1-c.	* Appropriate symbol shall precede corresponding to target feature.		
c	Missing S in Spherical dimension	Same as 1-a.	Same as 1-b.	Same as 1-c.	* S shall precede for spherical dimension.		
d	Missing tolerance for directly toleranced dimension	Same as 1-a.	Same as 1-b.	Same as 1-c.	* Attachment of tolerance required for non-basic dim		
e	Erroneous nX quanlity specification	Same as 1-a.	Same as 1-b.	Same as 1-c.	* Number of the same feature instance shall precede	Level of required feature is not clear.	Implicit Annotation Pattern
f	Inappropriate diameter symbol used for width feature	Same as 1-a.	Same as 1-b.	Same as 1-c.	* Wrong diameter symbol for a width feature		
g	Directly toleranced dimension used where a basic dimension should be used	Same as 1-a.	Same as 1-b.	Same as 1-c.	* Same as a.	Same as a.	See ASME 14.41-2003 3.1.1 (a) (4)
h	Missing S Ø symbol for spherical feature dimension	Same as 1-a.	Same as 1-b.	Same as 1-c.	* S Ø shall precede.		
i	Missing Ø symbol for cylindrical feature dimension	Same as 1-a.	Same as 1-b.	Same as 1-c.	* Ø shall precede.		
j	Tolerance value is greater than the dimension value	Same as 1-a.	Same as 1-b.	Same as 1-c.	* Tolerance value exceeds dimension value		
k	Frame shown around directly toleranced dimension	Same as 1-a.	Same as 1-b.	Same as 1-c.	* Wrong use of frame.		
l	Counterbore symbol shown on feature that is not a	Same as 1-a.	Same as 1-b.	Same as 1-c.	* Wrong counterbore symbol for cylindrical feature.		
m	Dimension to or from the edge of a cylindrical feature	Same as 1-a.	Same as 1-b.	Same as 1-c.	* Wrong counting of feature instances		
n	Dimension to or from the edge of a cylindrical feature	Same as 1-a.	Same as 1-b.	Same as 1-c.	* Wrong dimensioning from tangent line of a cylinder	Correction is good but is it unique solution?	Correct specification is only intended to show one possible solution.
o	Directly toleranced dimension to or from a typcally inap fea	Same as 1-a.	Same as 1-b.	Same as 1-c.	* Wrong dimensioning from tangent line of a sphere.		
p	Inappropriate S Ø symbol for cylindrical feature dimension	Same as 1-a.	Same as 1-b.	Same as 1-c.	* Wrong symbol used.		

Required level of feature representation shall be well discussed and confirmed.
Posession of geometry type is sufficient? Or more elaborate featured based representation is required for correctly enumerating the same feature instances? Or feature with application semantics is required?

PMI Errors and Violations from a Quality Perspective - PMI Errors 2

		a. Requirements for target shape representation	b. Requirements for GD&T representation	c. Requirements on the relationship of target shape and GD&T	d. Requirements for GD&T presentation	Memo	TDP Validation Team Response
1	Geometric Tolerance Zone Shape Error - Geometric Tolerance Specified with a Radius Symbol R		* Specified tolerance zone shape R is erroneous. It shall be Ø for cylindrical feature				
2	Geometric Tolerance Zone Shape Error - Spherical Tolerance Zone Specified for a Cylindrical Feature of Size			* Specified tolerance zone shape S Ø is erroneous. It shall be Ø for cylindrical feature			
3	Application Error - Leader-Directed Positional Tolerance Applied to a Round Feature Without a Diameter Symbol			* No geometric shape symbol is specified for tolerance zone shape. It shall be Ø.			
4	Geometric Tolerance Zone Shape Error - Missing Spherical Diameter Symbol in Positional Tolerance Feature Control Frame - Orientation of Parallel-Plane Tolerance Zone Unclear			* Tolerance zone shape S Ø is missing in tolerqance zone shape for spherical feature. Orientation of parallek plane tolerance zone is unclear.		Why Ø is attached for flatness of datum A?	See 4.1 and 4.2 in PMI Errors and Corrections version D1
5, 7	Inappropriate Symbol Used in a Datum Feature Symbol - Diameter symbol not required inside Datum Feature Symbol - Only letters are allowed		* Non alphabetic character is used for presenting datum fgeature				
6	Geometric Tolerance Zone Shape Error - Missing Spherical Diameter Symbol in Positional Tolerance Feature Control Frame - Orientation of Cylindrical Tolerance Zone Unclear			* Inappropriate geomety symbol Ø is used in tolerance zone for spherical feature. It shall be S Ø.		Why S Ø is attached for flatness of datum A?	See 6.1 and 6.2 in PMI Errors and Corrections version D1
a	Tolerance Application Error - Form tolerance (Circularity) applied to inapplicable feature type			* Circularity is applied tp plane feature			
b	Unauthorized Datum Feature Reference Error - Form tolerance includes a datum feature reference		* Flatness tolarance includes datum feature reference which is not allowed.				
c	Unspecified Datum Feature Error - Geometric tolerance references undefined Datum		* Undefined datum feature is referred in perpendicularity tolerance.				

d	Tolerance Zone Shape Error - Diametral tolerance zone specified inappropriately			* Diameter symbol is specified inappropriately for plane feature			
e	Missing Datum Feature Reference Error - Orientation tolerance must Reference a Datum Feature		* Angularity tolerance does not include datum feature reference				
f	Material Condition Modifier Error - Modifier applied inappropriately to feature without size		* Material condition modifier is specified inappropriately to angularity tolerance				
g	Tolerance Application Error - An orientation tolerance (Perpendicularity) applied to where a different tolerance should be specified		* Perpendicularity is inappropriately specified where angularity should be specified.			Measure angle of two planes and compare it with perpendicularity threshold.	Agreed
h	Self-Referential Datum Feature Reference Error - Datum Feature B toleranced to Datum		* Parallelism is specified referring own feature as a datum. It may be			Proposed correction may not be unique solution	Correct specification is only intended to show one possible solution.
i	Tolerance Application Error - Orientation tolerance (Parallelism) applied where a different tolerance should be specified (Perpendicularity)			* Parallelism is specified referring nearly perpendicular datum. It may be perpendicularity.		Measure angle of two planes and compare it with parralelism threshold.	Agreed
		Brep feature is required. But, possession of geometry type such as plane, cylinder, etc. may be sufficient. Or it could be specified by B_spline_form	PMI is understood not polyline nor unicode text but semantic representation	The relationship of target shape and PMI shall be correctly represented.			

PMI Errors and Violations from a Quality Perspective - PMI Errors 3

		a. Requirements for target shape representation	b. Requirements for GD&T representation	c. Requirements on the relationship of target shape and GD&T	d. Requirements for GD&T presentation	Memo	TDP Validation Team Response
a	Disallowed Leader Line Error - Use of Hidden Line Leaders on Models (ASME Y14.41)		Datum target	Designation of datum target	Use of hidden line leader is not allowed(ASME Y14.41)		
b	Datum Target Specification Error - Duplicate Target		Datum target	* Multiple points are designated for a datum target	datum target		
c	Datum Target Specification Error - Incorrect Datum Target Specification - Format error		Datum target		Datum target symbol * Incorrect presentation of datum target symbol (Datum target name is shown in upper part of the symbol.)		
d	Standard Reference Error - Movable Datum Target Symbol used with ASME Y14.5M-1994 without referencing ASME Y14.8-1996 or later (Alternate solution: Reference ASME Y14.5-2009)		Datum target		Datum target symbol * Incorrect presentation of datum target symbol (Using mixed versions of ASME standard.)	Multiple standards is not allowed in ISO.	Two solutions indicated: 1) Do not use movable datum target if 14.5-1994 referenced 2) Use movable datum target if 14.5-2009 referenced NOT recommending references to both 14.5 versions in same model
e	Datum Target Specification Error - Invalid Specification - Missing Numeric Suffix		Datum target		Datum target symbol * Incorrect presentation of datum target symbol (Missing numeric suffix)		
f	Datum Feature Reference Type Error - Wrong type of datum feature referenced (Runout requires a datum axis and cannot be parallel to a single datum center point)	Circular shape	Circular run-out Parallerism	Circular runout requires a datum axis. * Datum feature for runout is a region. Datum feature for parallerism is a line or a plane. * Datum feature for parallerism is a single center point.		It is uniquely determined that correct specification(perpendicularity referring A as a datum feature) is a sole solution?	Correct specification is only intended to show one possible solution.
g	Datum Feature Reference Type Error - Insufficient Degrees of Freedom constrained by referenced datum features	Circular shape	Circular run-out Parallerism	* Only a datum plane is referenced and datum axis is not referenced for runout of a sphere. Both references are required to define a center point. * A datum point is referenced for parallerism of cylinder. A			
h	Inappropriate Leader Line Error - Center line, phantom line, etc.				Leader line * Center line or phantom line is used for a leader line.		

i	Type Error - Dimension - Basic dimension must be used where profile tolerance controls orientation and/or location of a surface		Profile of a surface		Dimension * Basic dimension is not used where profile tolerance controls orientation and/or location of a surface		
j	True Profile Definition Error – Form/orientation/location controlling profile applied to surface oriented/located using directly toleranced dimension		Dimension applied to datum feature for profile of a surface		Dimension * Directly toleranced dimension is used where profile tolerance controls orientation and/or location of a		
k	Datum Feature Specification Error - Inappropriate Datum Feature Letter Specified (I, O, or Q)		Datum feature		Datum feature symbol * Inappropriate letter (I, O or Q) is used as datum feature specification		
l	Datum Feature Reference Error - Inappropriate Datum Feature Letter Referenced		Reference of datum feature		Referenced datum feature * Inappropriate letter (I, O or Q) is used as datum feature reference		
m	Datum Feature Symbol Error - Attachment Error - Ambiguous Specification	Surface for datum feature.	Datum feature	Datum feature shall be assigned to a surface, or an axis defined by a cylindrical surface. * Datum feature symbol is not directed to a surface	Presentation of datum feature * Datum feature symbol is directed to an edge.		
n	Datum Feature Symbol Error - Incomplete Datum Feature Symbol Used		Datum feature		Datum feature symbol * Incomplete datum feature symbol is used		
o	Datum Feature Symbol Error - Wrong Datum Feature Symbol Used (Datum Feature Symbol from ANSI Y14.5M-1982 or		Datum feature		Datum feature symbol * Invalid datum feature symbol is used		
p	Geometric Tolerance Zone Shape Error - Leader-directed Orientation Tolerance Specified Without a Diameter Symbol	Cylindrical surface	Perpendicularity	For perpendicularity of axis, shape of tolerance zone is between two planes defined by two datum features, or inside a cylinder defined by a single datum feature	Presentation of perpendicularity * Diameter symbol is missing for non-directional perpendicularity defined by a single datum feature		
q	Datum Feature Symbol Geometry Error - Incorrect Geometry Used in Construction of Datum Feature Symbol		Datum feature		Datum feature symbol * Invalid color is used for datum feature symbol (?)		
r	Combined Datum Feature Symbol Error - Datum Feature Symbol from ANSI Y14.5M-1982 or Before Combined with Current		Datum feature		Datum feature symbol * Invalid datum feature symbol is used	I do not see why case o and case r are different errors.	Case r involves two datum feature symbols, in separate drawing views. This would not occur with 3D GD&T.

PMI Errors and Violations from a Quality Perspective - PMI Errors 4

		a. Requirements for target shape representation	b. Requirements for GD&T representation	c. Requirements on the relationship of target shape and GD&T	d. Requirements for GD&T presentation	Memo	TDP Validation Team Response
a	Arrowhead / Terminus Error - Leader Line - Leader directed to surface within feature outline should terminate in a dot (ASME Y14.41) [Also				* Leader directed to surface feature should terminate in a dot not an arrow(ASME Y14.41)		
b	Direction Dependent Tolerance Error - Missing supplemental geometry indicating direction tolerance			* Supplementary geometry indicating direction to apply tolertance is missing			
c	Feature of Size Dimension Attachment Error - Size dimension and tolerance directed to/attached to only one surface of width feature of			* Size dimension and tolerance of a width feature is directed to only one surface. Two surfaces shall be directed.			
d	Application Error - Leader directed to surface within feature outline should terminate in a dot (ASME				* Leader directed to surface feature should terminate in a dot not an arrow(ASME Y14.41)	Any difference with a?	Defect d is precluded by defect c
e	Geometric Tolerance Zone Shape Errors - Inapplicable Symbol - Inappropriate diameter symbol specified for width feature dimension		* Inappropriate diameter symbol is used for width feature.				
f	Arrowhead / Terminus Error - Leader Line - Leader directed to surface within feature outline should terminate in a dot (ASME Y14.41) [Also				* Leader directed to surface feature should terminate in a dot not an arrow(ASME Y14.41)	1. Any difference with a? 2. Why 5XØ13+-0.08 is left unchaged?	1. Agree that no fundamental difference, just another example with another type of annotation 2. This defines Datum B which is used by defect a

PMI Errors and Violations from a Quality Perspective - PMI Errors 5

		a. Requirements for target shape representation	b. Requirements for GD&T representation	c. Requirements on the relationship of target shape and GD&T	d. Requirements for GD&T presentation	Memo	TDP Validation Team Response
a	Dimension and Terminus Error - Dimension to/fromedge of hole of tangent to radius (violation of best practice?)	cylinder(hole) or circle	dimension	For measuring dimension of two cylindrical feature * edge of hole or tangent to radius is used		violation of best practice	Agreed
b	Disallowed KEYWORD Error - the keyword "TRUE"is prohibited on annotated models				* Invalid keyword. "True" is prohibited on annotated models	Is it simple a problem of display?	Semantic problem if "TRUE" flag is part of semantic definition; display-only problem if TRUE is pre-text or note
c	Self-Referential Datum Feature Reference Error - Datum feature is toleranced relative to the datum derived from the datum feature		Geometric tolerance using datum feature	* Inappropriately using target shape itself as a datum feature			
d	Attachment Error - Leader directed to edge rather than surface - unclear which surface is controlled		Leader directed to edge rather than surface		* Leader shall direct to surface for preventing umbiguity.		
e	Attachment Error - Profile tolerance attached to basic dimension		Profile tolerance	Basic dimension	* Profile tolerance attached to basic dimension	Is it simple a problem of display?	Semantic problem if profile tolerance has a composite annotation relationship with the basic dimension
f	Tolerance Extents Error - the extents the tolerance applies are unclear [may be clarified by query and cross-	Cylindrical surface	Geometric tolerance applied to surface	* Surface extent to apply tolerance is noy clear			
g	Attachment Error - Profile tolerance attached to basic dimension		Profile tolerance	Basic dimension	* Profile tolerance attached to basic dimension	Is it simple a problem of display? 2. Any difference with e?	Agree that this is redundant with e
h	Dimension Origin Error - Dimension origin symbol applied to basic dimension		Basic dimension		* Dimension origin symbol applied to basic dimension	Is it also prohibited in ISO?	This is not prohibited by ASME or ISO but is considered unnecessary
i	Model Coordinate System Error - Model Coordinate System Missing from Save				* Model coordinate system is missing	Is it simple a problem of display?	Semantic if model coordinate system is not defined in the model

Theoretically correct dimension is called "basic dimension" in ASME Y14.5

It is called dimension with frame in JIS

PMI Errors and Violations from a Quality Perspective - PMI Errors 6

		a. Requirements for target shape representation	b. Requirements for GD&T representation	c. Requirements on the relationship of target shape and GD&T	d. Requirements for GD&T presentation	Memo	TDP Validation Team Response
a	Inapplicable modifier for Datum Feature reference – unequally – disposed, independency, envelope (ISO)			Applicable modifier for Daum Feature should be used. * Inapplicable modifier for Datum Feature reference – unequally – disposed,			
a'	Symbols unique to ISO standards used in ASME-base datasets				Symbols allowed in a standard set should be used. * Symbols unique to ISO standards are used in ASME-		
b	Unnecessary modifier for Datum Feature reference – tangent plane				* Unnecessary modifier for Datum Feature reference – tangent plane		
c	Quantity Error – "X places" not specified where needed			"X places" should be specified as needed. * Quantity Error – "X places"			
d	Untoleranced feature / missing tolerances		Torelance should be specified as needed. * Untoleranced feature /				
e	Unnecessary modifier for Datum Feature reference – RFS				Modifier should be used for Datum Feature as needed. * Unnecessary modifier for		
f	Incorrect format – leading and trailing zero usage – incorrect number of decimal places (related to units)				* Incorrect format – leading and trailing zero usage – incorrect number of decimal		
g	Duplicate Datum Feature Reference – datum feature referenced twice in a feature control frame			* Duplicate Datum Feature Reference – datum feature referenced twice in a feature			
h	Runout applied to also control size - this application is not defined in ASME or ISO. runout may be used to control a basically dimensioned feature if its size is controlled a profile of a surface telerance; or, runout may be used to control a feature of size whose size is controlled by a directly toleranced			* Runout may be used to control a basically dimensioned feature if its size is controlled a profile of a surface telerance; or, runout may be used to control a feature of size whose size is controlled by a directly		Run out applied to control size is not defined in ASME or ISO.	Agreed

i	Disallowed modifier for Datum Feature reference – MMC (MMB) or LMC (LMB) for concentricity or symmetry (1994 & 2009), circular runout and total runout (2009)			* Disallowed modifier for Datum Feature reference – MMC (MMB) or LMC (LMB) for concentricity or symmetry (1994 & 2009), circular runout and total runout (2009)			
j	Projection modifier for Datum Feature reference - not defined				●Projection modifier for Datum Feature reference not		
k	Flatness attached to a dimension without a center plane Note -corrected k Flatness tolerance moved and attached to .080+-.002 keyway dimension and tolerance.			* Flatness attached to a dimension without a center plane Note -corrected k Flatness tolerance moved and attached to .080+-.002 keyway		Proposed correction may be valid but is it a unique solution?	Correct specification is only intended to show one possible solution.
l	Single direction-dependent positional tolerance for cylindrical feature Note: corrected version include two mutually-perpendicular bi-directional positional tolerances.			Positional tolerance for cylindrical feature should be defined in more than two direction. * Single direction-dependent positional tolerance for cylindrical feature Note: corrected version include two mutually-perpendicular bi-		Proposed correction may be valid but is it a unique solution? Where tolerance value .03 comes from?	Correct specification is only intended to show one possible solution. The .03 tolerance is an example of why two mutually-perpendicular tolerance specifications can be useful.
m	Unspecified Datum Feature – datum feature referenced in feature control frame is undefined			* Unspecified Datum Feature – datum feature referenced in feature control frame is undefined			
n	Projected tolerance zone not specified for threaded hole			* Projected tolerance zone not specified for threaded hole			
o	Symbols unique to ISO standards used in ASME-base datasets				* Symbols unique to ISO standards used in ASME-base datasets		
p	Projected tolerance zone length not specified			* Projected tolerance zone length not specified			
q	ISO Tolerance application carried over into ASME-based dataset				* ISO Tolerance application carried over into ASME-based dataset	Proposed correction may be valid but is it a unique solution?	Correct specification is only intended to show one possible solution.
r	Projected tolerance zone on non-projectable feature			* Projected tolerance zone on non-projectable feature			
s	Unreferenced Datum Feature – datum feature identified and labeled but not referenced in a feature control frame				Datum Feature that is not referenced from any other declaration is errornous. * Unreferenced Datum Feature – datum feature identified and labeled but not referenced in a		

PMI Errors and Violations from a Quality Perspective - PMI Errors 7 **A. Ohtaka, 2010-09-13**

		a. Requirements for target shape representation	b. Requirements for GD&T representation	c. Requirements on the relationship of target shape and GD&T	d. Requirements for GD&T presentation	Memo	TDP Validation Team Response
a	Incorect delimiter for limit dimensions	Featuring	Well grouped representation	Appropriate relationship between target feature and GD&T data	* Invalid delimiter. Is shall be - not /.		
b	Incorrect delimiters ISO uses , and ASME uses .	Same as a-a.	Same as a-b.	Same as a-c.	* Invalid delimiter for unit. ASME uses a decimal point and ISO uses a comma	We develop an ISO standard. Difference between ASME and ISO shall be checked.	Should be checked relative to the standard referenced by the model.
c	Missing size dimension and tolerance for feature of size	Same as a-a.	Same as a-b	Same as a-c.	* Dimension and tolerance are missing for a size featur		
d	Depth tolerance value larger than depth dimensior	Same as a-a.	Same as a-b	Same as a-c.	* Depth tolerance is larger than depth value		
e	Conflicting redundant tolerances applied to a feature	Same as a-a.	Same as a-b	Same as a-c.	* Duplicate and redundant flatness tolerances are given		
f	Accumulation of multiple tolerances conflicts with single tolerance value	Same as a-a.	Same as a-b	Same as a-c.	* Accumulation of tolerances conflicts with single tolerance value.		
g	These datum features do not have Least Material and Maximum Material Boundaries	Same as a-a.	Same as a-b	Same as a-c.	* Mofifiers M, Lare specified for datums without medium plane.		
h	Missing Countersink Symbol Error.	Same as a-a.	Same as a-b	Same as a-c.	* Appropriate symbol is required since feature definition is specified as part of a directly toleranced dimensior		
i	Missing counterbore symbol error	Same as a-a.	Same as a-b	Same as a-c.	* Appropriate symbol is required since feature definition is specified as part of a directly toleranced dimensior		

PMI Errors and Violations from a Quality Perspective - PMI Errors 8 **A. Ohtaka, 2010-09-13**

		a. Requirements for target shape representation	b. Requirements for GD&T representation	c. Requirements on the relationship of target shape and GD&T	d. Requirements for GD&T presentation	Memo	TDP Validation Team Response
a	Missing Unequally-Disposed Profile MMB Value Error	Featuring	Well grouped representation	Appropriate relationship between target feature and GD&T data	* Offset value is missing after modifier symbol.	It is unclear if it is a defect of GD&T representation or presentation.	Semantic problem if value offset is not defined in the data model.
b	Improper Unequally-Disposed Modifier Error	Same as a-a.	Same as a-b.	Same as a-c.	* Different symbol or delimiter are used to indicate unilateral-bilateral, unilateral profile tolerance	Take care ASME vs. ISO difference	Should be checked relative to the standard referenced by the model.
c	Missing Unequally-Disposed Modifier Error	Same as a-a.	Same as a-b.	Same as a-c.	* Modifier is missing.		
d	Datum target Leader Terminator Error	Same as a-a.	Same as a-b.	Same as a-c.	* No terminator required for datum target leaders		
e	Datum Feature Attachment Error	Same as a-a.	Same as a-b.	Same as a-c.	* Datum feature attached to a single extension line from a feature outline.		

PMI Errors and Violations from a Quality Perspective - PMI Errors 9 **A. Soma, 2010-09-15**

		a. Requirements for target shape representation	b. Requirements for GD&T representation	c. Requirements on the relationship of target shape and GD&T	d. Requirements for GD&T presentation	Memo	TDP Validation Team Response
a	Leader directed to center plane (not modeled or shown) rather than to surface of width (stepped)				* Leader directed to center plane rather than to surface of width.		
b	Projected tolerance zone on threaded through hole without projection direction indication				* Projected tolerance zone on threaded through hole specified without projection direction indication		
c	Projected Tolerance Zone Attachment Error - Projected tolerance directed to feature using a method besides leader directed tolerance				* Projected tolerance directed to feature using a method besides leader directed tolerance.		
d	Projected Tolerance Zone Attachment Error - Projected tolerance specification not attached to end of feature				* Projected tolerance specification not attached to end of feature.		
e	Dimension Application Error – Directly Toleranced Dimension used to define the orientation and/or location between			* Directly toleranced dimension is used to define orientation and/or location between features			
f	Leader directed to center line (axis) rather than surface of hole or pin (stepped)			* Leader directed to center line rather than surface of hole or pin			
		Brep feature is required. But, possession of geometry type such as plane, cylinder, etc. may be sufficient. Or it could be specified by B_spline_form	PMI is understood not polyline nor unicode text but semantic representation	The relationship of target shape and PMI shall be correctly represented.			

Certification of 3D MBD Data

Simon Frechette
NIST
Gaithersburg, MD 21703
Simon.frechette@nist.gov
301-975-3335

Problem

- Many defense systems are delivered with insufficient, inaccurate, and non-interoperable data that makes supporting the system in the field difficult.
- All new systems are designed and developed within a 3D modeling environment - significant delays and added costs are incurred by requiring delivery of data as drawings.
- 3D model data is not currently approved within DoD for use as “Master” product data.
- No approved processes or guidelines exist within DoD for validating 3D product data integrity or certifying 3D model data for approval as the master data reference.
- DoD currently utilizes 2D official drawings for procurement, even if 3D data is available.
- Vendors are often reluctant to quote due to risk involved with questionable documentation or will quote considerably higher prices to cover risk

Problem: Bad Models Cause Delays, Cost a Lot of Money, and Foster a Lack of Trust

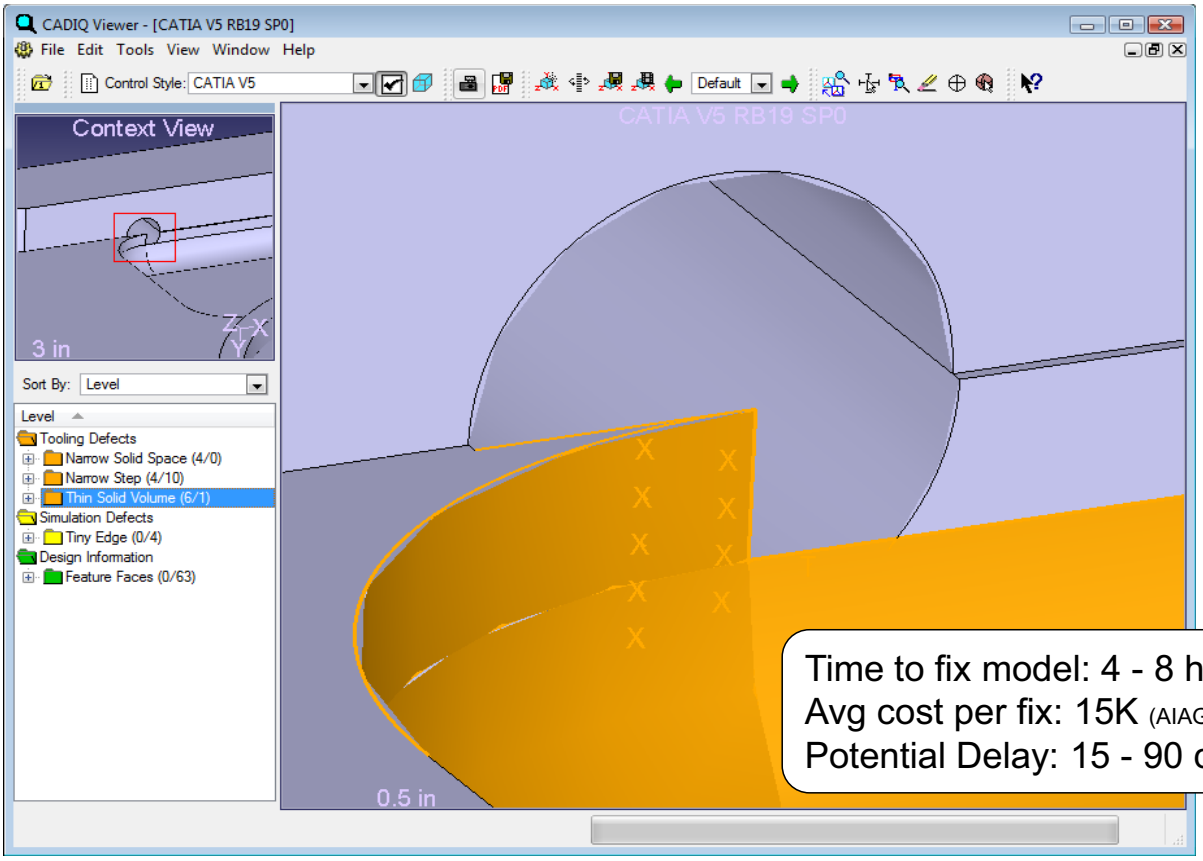

Time to fix model: 4 - 8 hrs
Avg cost per fix: 15K (AIAG Study)
Potential Delay: 15 - 90 days

Problem: 3D Model-Based Processes Have not Yet Been Accepted for DoD Acquisition

Digital Tolerance

"Model-based definition could spell the end for traditional drawings, but first, there's an issue of trust to address."

By Jean Thilmany, Associate Editor Mechanical Engineering Magazine
Mechanical Engineering, July 2010

Data Not Validated – Consequences

- Translation and Migration Validation
  - Lost Data?
  - Significant changes introduced?
  - *Clear*: Non-value-added rework
  - *Subtle*: Unknown change affects design intent

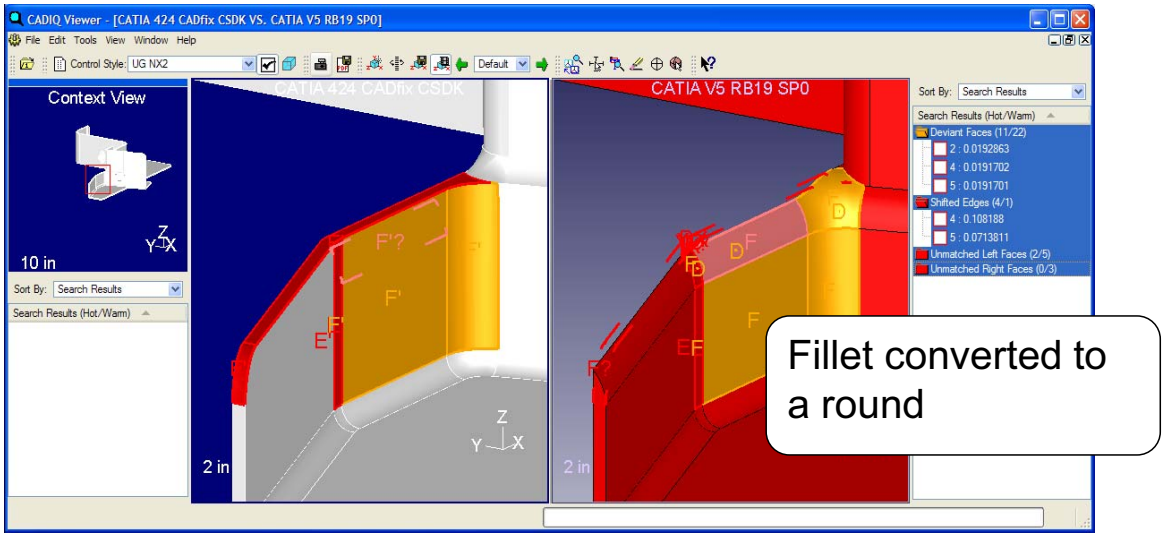

Data Not Validated – Consequences

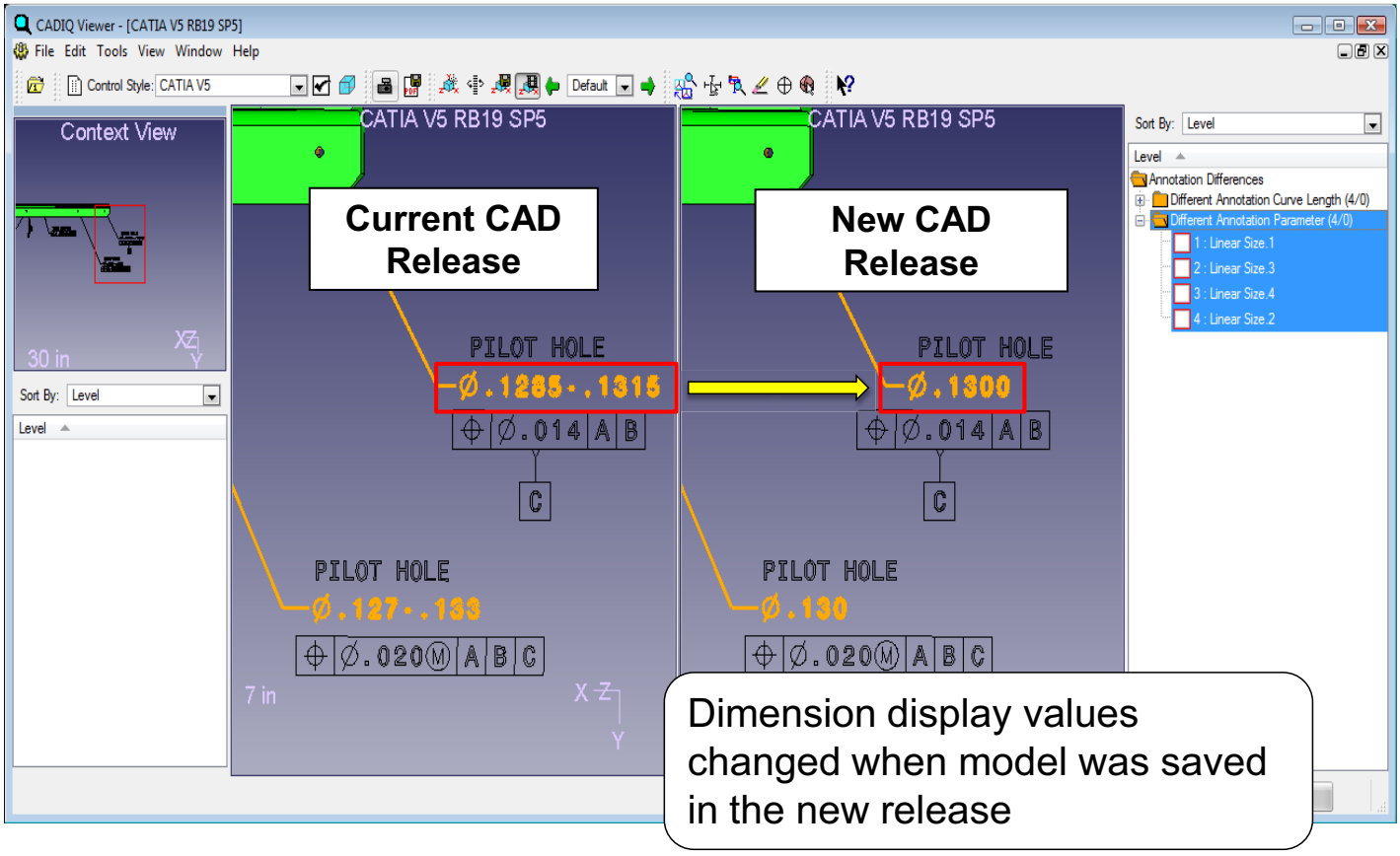

Value and Opportunity

- Relevance
  - Increasing the efficiency of product data distribution across the lifecycle significantly shortens time-to-field for new, upgraded, repaired, products
  - Validating 3D product data increases the quality of product delivered to the field by decreasing re-mastering and reentry of data across the lifecycle
- How is it done today, and what are the limitations of the current practice?
  - For US DoD, Technical Data Package requirements are focused on 2D Drawing not 3D models which is a barrier for efficient reuse of model data.
  - Little or no validation performed currently. If validation is performed, its is limited and not standardized
  - Archiving and ineffective reuse of MBD data can add significant costs to the program lifecycle
- Solution
  - Validating the TDP during the acquisition phase will insure that TDP data meets requirements and will be useable during the system lifecycle.
  - Increase accuracy and efficiencies of downstream user of data for lifecycle activities.

Approach

- This project will develop and demonstrate processes to validate 3D model data for approval as “master” product data. The initial project scope will be limited to priority component and data types.

- The project will develop data quality requirements, validation techniques, data validation metrics to allow program managers to directly and independently assess technical data packages for completeness and conformance to data guidelines.

Technical Objectives

- Validation is the process of determining if models are reasonable, complete, and logically consistent with respect to the intended use of the data.
- Validation will often consist of several steps, including logical checks, accuracy assessments, and error analysis. Aspects of model validation include:
  - Model Consistency
  - Model Completeness
  - Model Realism
  - Model Quality
  - Conformance to standards and requirements
  - Future Model Interpretation

Technical Objectives

Legacy Data → Current CAD

Is the Result Valid?

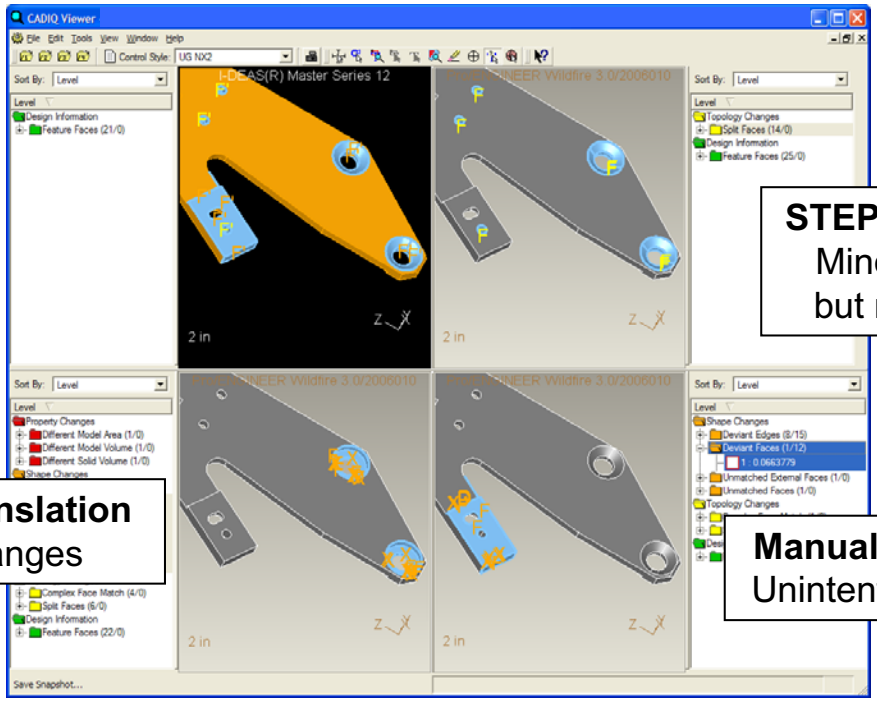

STEP Translation
Minor changes
but no features

Feature Translation
Major changes

Manual Remastering
Unintentional changes

Source: ITI TranscenData

Implementation Plan

- Develop and demonstrate processes and specifications for validating 3D model data for approval as “master” product data.
- Project scope will be limited to an initial set of priority applications.
- Develop data quality requirements, validation techniques, and data validation metrics to allow program managers to directly and independently assess technical data packages for completeness and conformance to model quality guidelines.

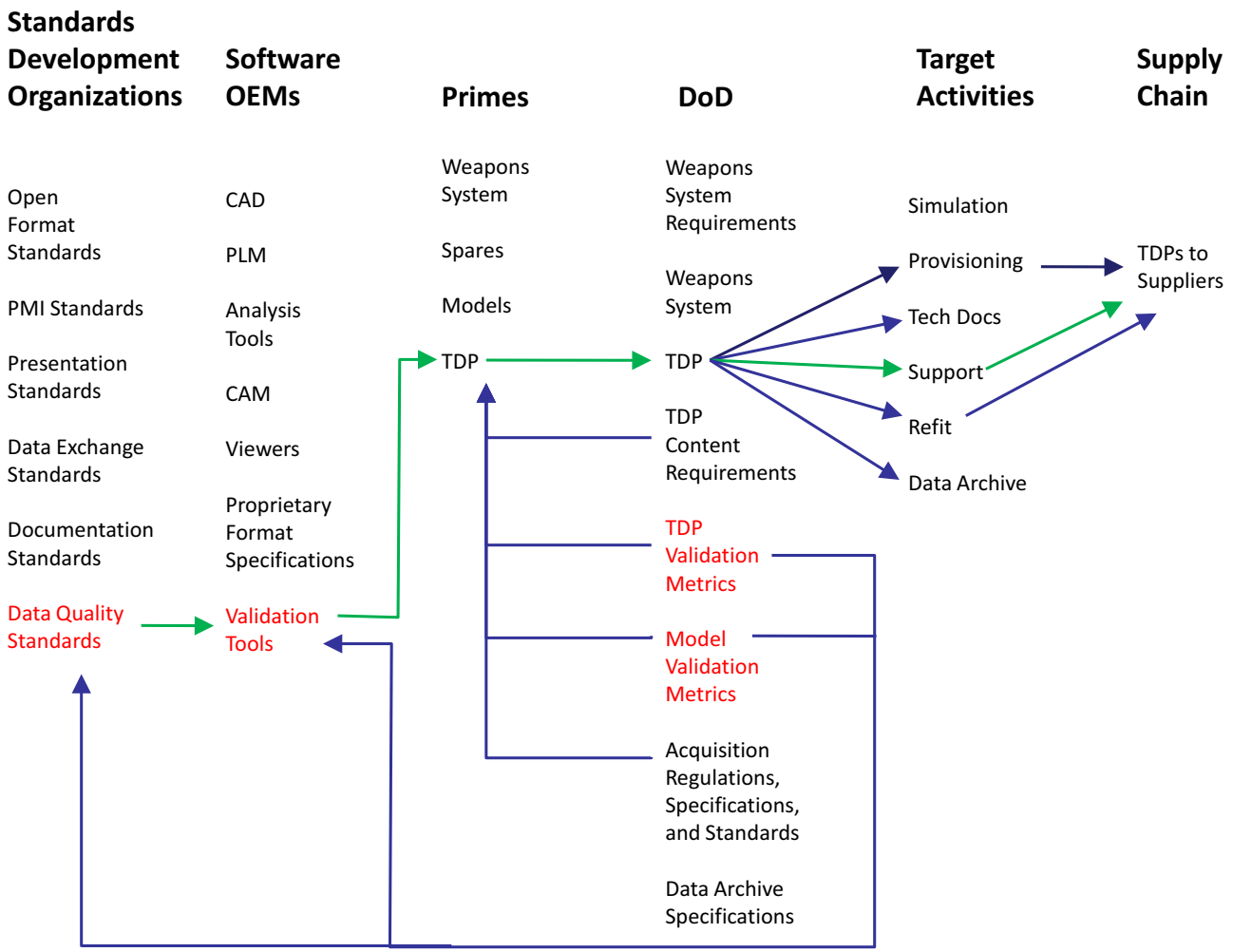

Implementation Plan

- Identify priority MBD data subsets for the initial project scope. MDB data subsets for phase 1 include:
  - Assembly structure
  - Product geometry
  - Reference geometry
  - PMI
  - Model attributes
  - Model meta data
  - Modeling standards

Implementation Plan

- Working with software vendors to establish requirements and continuously release new validation capabilities as an ongoing activity.

- Working with DoD organic industrial base (depots), prime contractors and technology vendors to set requirements and establish processes and specifications.

Implementation Plan

- DoD services both receive and author technical data packages
  - DoD program managers receive technical data packages (TDPs) from contract primes as part of the overall system delivery. These TDPs should include all data require to provision and support the system including producing spare parts. TDPs delivered from primes have been delivered as 2D drawings, but will increasingly be delivered using 3D models of various formats.
  - DoD services also author technical data packages for the production of spare parts and system upgrades. Components are produced at DoD facilities and by suppliers. TDPs delivered to supplies must be validated to allow suppliers to use 3D native or neutral format models for production.

Two TDP Modes

1. New Systems: Receive Technical Data Packages

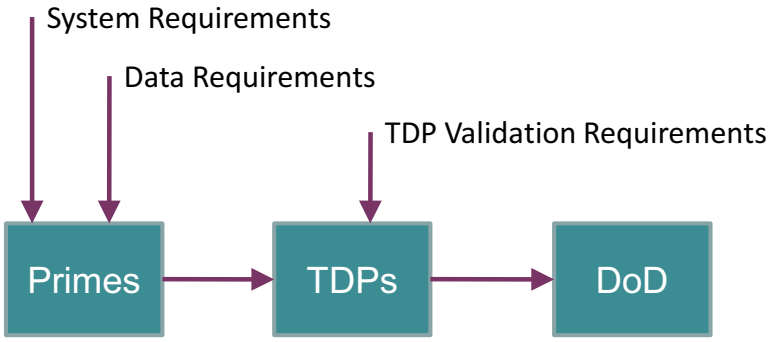

2. Existing Systems: Author Technical Data Packages

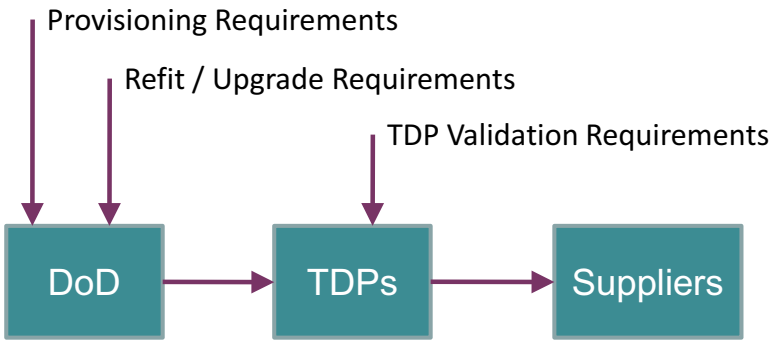

Technical Progress

1. Pilot validation using DoD program data
2. PMI validation requirements and prototype PMI validation
3. Validation techniques
4. Composites information validation
5. DoD model validation handbook
6. Standards

Technical Progress

- Successfully completed pilot validation effort of M2 50 cal. models and Bradley transmission models.
  - The pilot included 11 fully annotated M2 models created by ARDEC and over 700 Bradley transmission models.
  - The models were validated against an MBE schema and model validation requirements gathered from MBE validation workshops. ITI TranscenData and Elysium software applications were used to validate the models.
  - The Bradley transmission models were then translated from CATIA 4 to Pro/E Wildfire 4 format and re-validated.

Technical Progress: Bradley Transmission Pilot

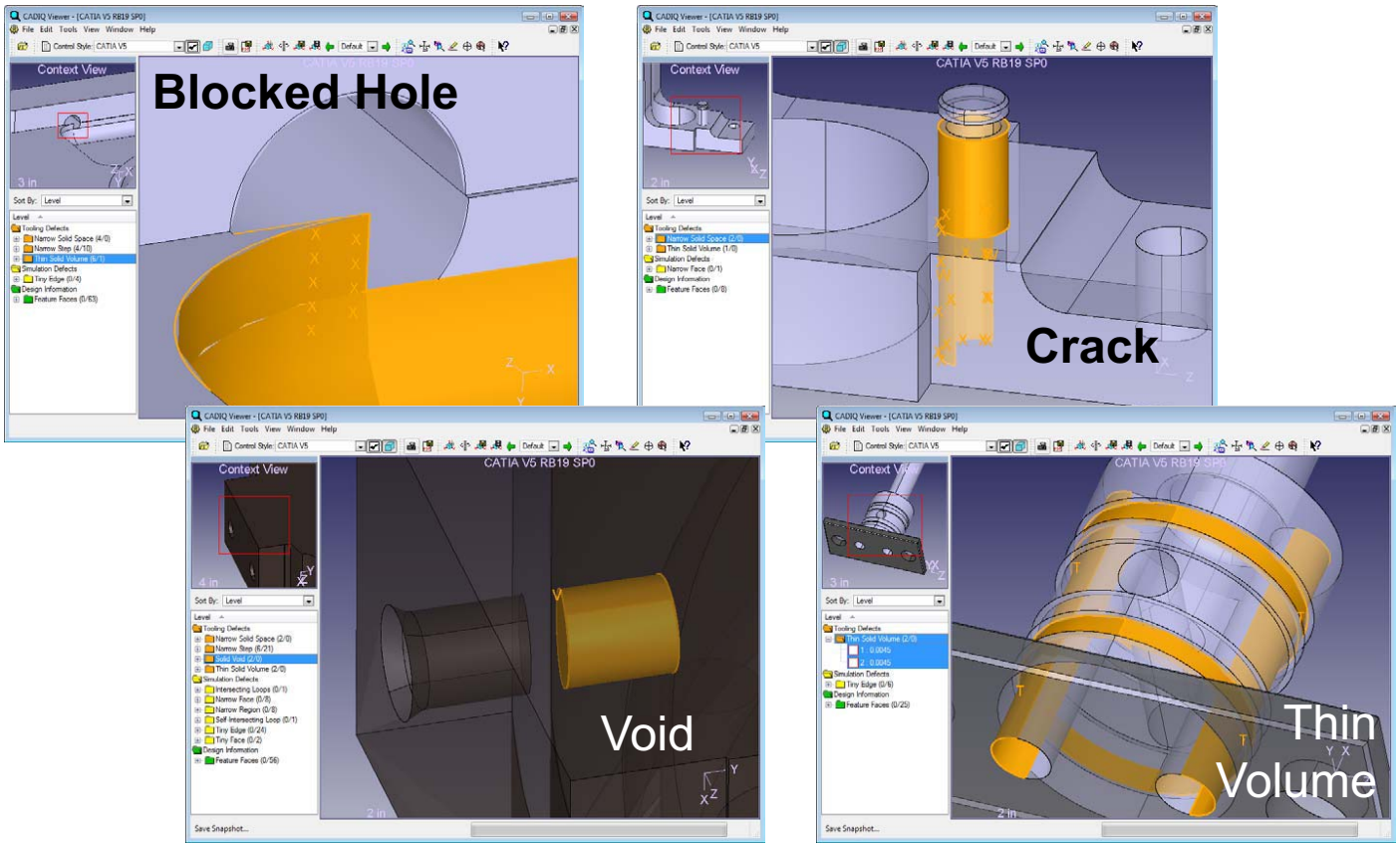

Technical Progress: Validation Methods

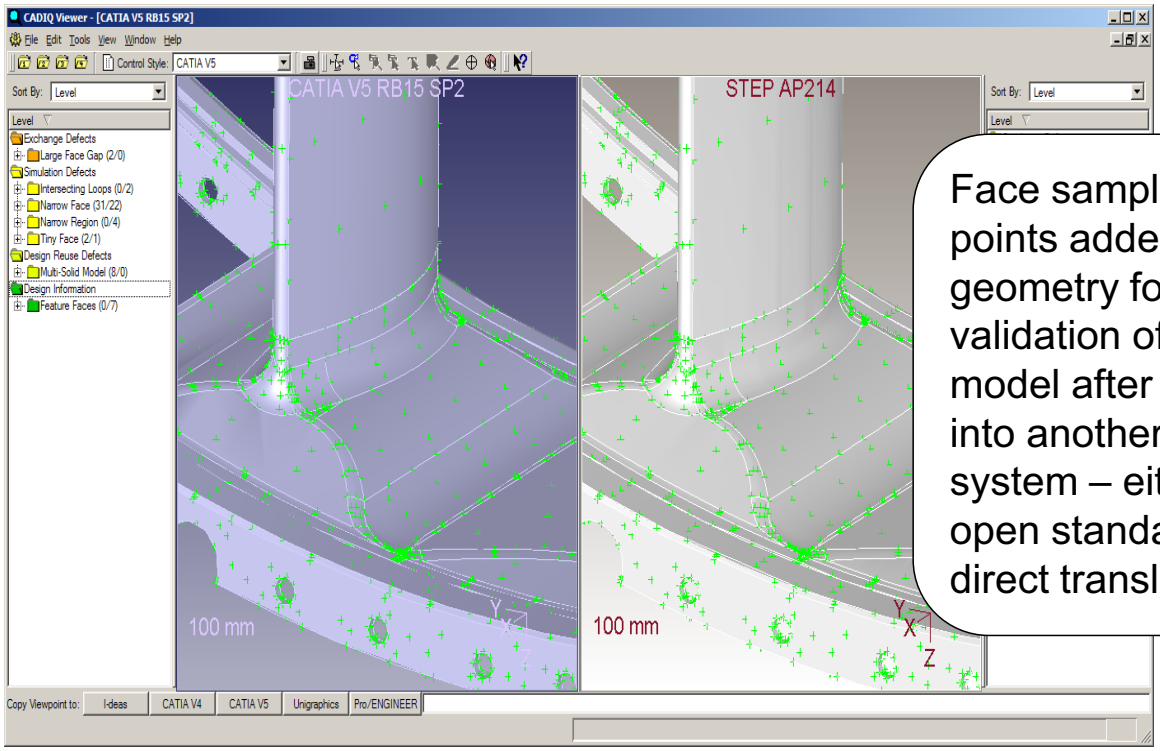

Face sampling points added to geometry for validation of the model after importing into another CAD system – either via open standard or direct translator

Technical Progress: PMI Validation

ADV/DM Advanced Dimensional Management LLC

Figures – Errors and Corrections: PMI Errors and Violations from a Quality Perspective

Part of the
"Validating a Certified Technical Data Package for the Model-Based Enterprise Project" for BAE/NIST

July 12, 2010

Revision C.1

Client Confidential

Prepared for: ITI TranscenData

Prepared by: Bryan R. Fischer – Advanced Dimensional Management LLC – 2010

Technical Progress: PMI Validation

PMI Quality Validation

ADV/DM Advanced Dimensional Management LLC

Errors

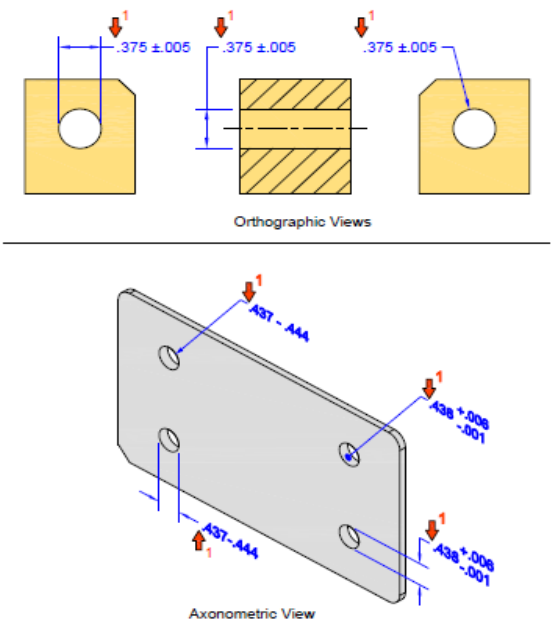

Figure 1-1
PMI Errors: Missing Diameter Symbol in Size Dimension: Various Examples in Orthographic and Axonometric Views

Correct Specifications

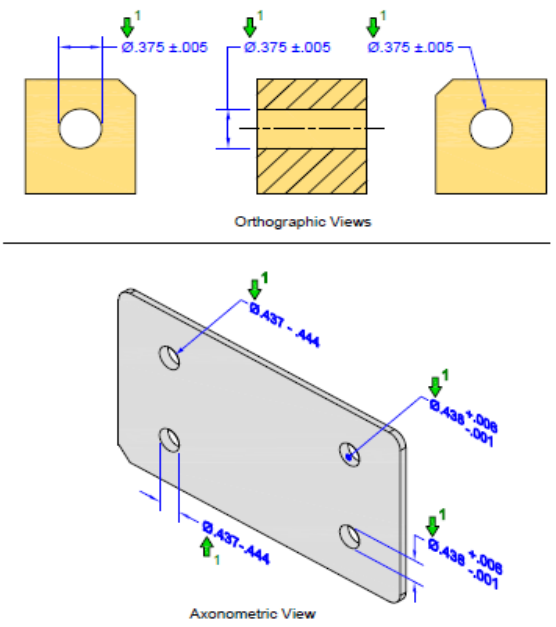

Figure 1-1
Correct Specifications

1. Type Error - Dimension Missing Diameter Symbol in Size Dimension

PMI Errors 1a

© Copyright Advanced Dimensional Management LLC – 2010 – All Rights Reserved – Unrestricted rights granted to NIST, BAE Systems, and ITI Transcendata

Technical Progress: PMI Validation

PMI Quality Validation

ADV|DM Advanced Dimensional Management LLC

Errors

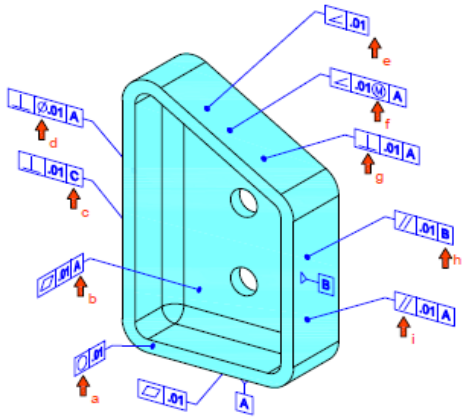

Figure 2-6
PMI Errors: Various Geometric Tolerancing Errors

Correct Specifications

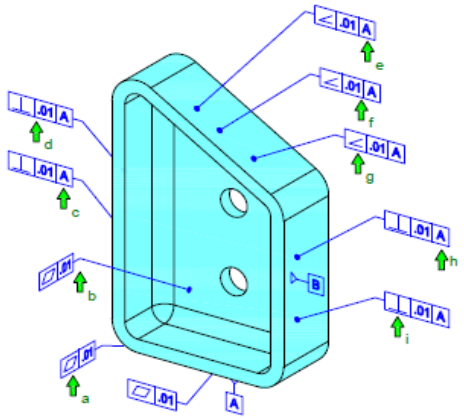

Figure 2-6
Correct Specifications

a. Tolerance Application Error - Form tolerance (Circularity) applied to inapplicable feature type
b. Unauthorized Datum Feature Reference Error - Form tolerance includes a datum feature reference
c. Unspecified Datum Feature Error - Geometric tolerance references undefined Datum Feature
d. Tolerance Zone Shape Error - Diametral tolerance zone specified inappropriately
e. Missing Datum Feature Reference Error - Orientation tolerance must Reference a Datum Feature
f. Material Condition Modifier Error - Modifier applied inappropriately to feature without size (Orientation tolerances may only be specified with MMC modifier if toleranced feature is a feature of size)
g. Tolerance Application Error - Inappropriate orientation tolerance (Perpendicularity) applied where a different tolerance should be specified (Angularity)
h. Self-Referential Datum Feature Reference Error - Datum Feature B toleranced to Datum B
i. Tolerance Application Error - Orientation tolerance (Parallelism) applied where a different tolerance should be specified (Perpendicularity)

PMI Errors 2c

© Copyright Advanced Dimensional Management LLC – 2010 – All Rights Reserved – Unrestricted rights granted to NIST, BAE Systems, and ITI Transcendata 6 of 20

Technical Progress: Composites Information

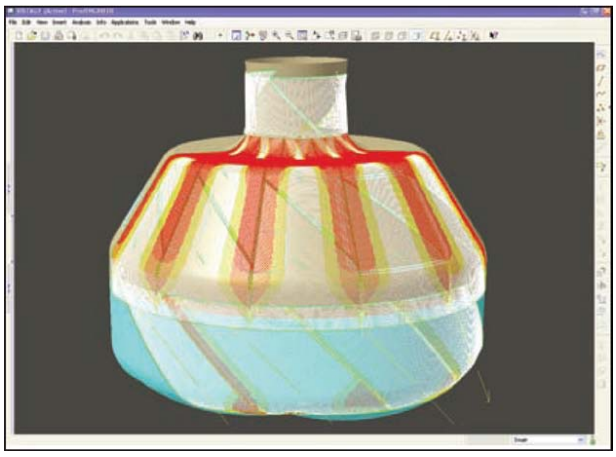

FiberSIM Definition and Simulation of Composite Structure TDP

Manufacture of Actual Composite Structure Directly from 3D TDP

Technical Progress: Composites Information

- TDPs must support repurposing information for target processes
  - Practical composites design definition not fully specified by basic composite specification
  - Reuse limited by incomplete definitions
- For example,
  - Fiber deviations can account for differences in the as-manufactured design leading to difficulties in maintenance, designing repairs, and in-service analysis.
  - Manufacturing data is essential to repeatable fabrication of designs: flat patterns, fiber placement data, etc. are all required.

Technical Progress: Composites Information

Composites Data Sets

- Level I – Basic definitions
  - Ply orientations, materials, lay ups, ply boundaries, tool surface
- Level II – Analysis capability
  - True fiber orientations, zone definitions
- Level III – Manufacturing data
  - Flat patterns, fiber placement data, deposition start locations, layup strategy

All three data sets must be delivered to support target DoD activities (MRO, supply chain, depot service, etc.)

Technical Progress: Validation Handbook

2nd Draft Handbook for 3D Model Based Definition Data Validation

July 23, 2010

Forward 3
Scope 4
Applicable documents 4
Definitions 5
General requirements 10
Detailed requirements 11
Quality acceptance criteria 11
Data checking processes and procedures 13
Model healing processes and procedures 15
Conversion of 3D models from one format to another 16
Re-mastering of 3D model data 16
Long-term archiving of 3D model data 18
Appendix A – Product data quality criteria 20
Geometry 20
Curve criteria 20
Surface criteria 28
Edge criteria 39
Edge loop criteria 41
Face criteria 45
Shell criteria 51
Solid body criteria 57
Appendix B – Recommended numerical thresholds for PDQ criteria 61
Appendix C – Examples of data checking software and procedures 62
Appendix D – Examples of data healing software and procedures 64
Appendix E – Examples of semi-automated re-mastering 68

2

2nd Draft Handbook for 3D Model Based Definition Data Validation

July 23, 2010

Appendix A – Product data quality criteria

Geometry

Curve criteria

Large segment gap (G_0 discontinuity) (G-CU-LG)

Definition: The distance between end points of adjacent curve or line segments is excessive. Curves may be separated by a gap or may overlap.

Measurement: gap width or overlap in mm

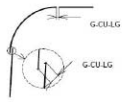

Figure 8-Examples of gaps and overlaps (G_0 discontinuity)

Effects of condition on CAD data quality:

Design or drafting: When curves are offset, gaps between segments may be enlarged or overlapping segments may intersect. Cross-sectional views may fail.

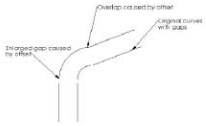

Data exchange: Faces associated with curves may not trim properly.

Finite element analysis: Unwanted mesh elements may be produced. Automatic mesh generation may fail.

Numerically controlled milling: Gouges or abrupt changes in angle may occur when cutting curve surfaces.

Recommended correction: Limit the distance between end points to less than the recommended values. The preferred correction method is extending or trimming one or both entities.

20

Technical Progress: Validation Handbook

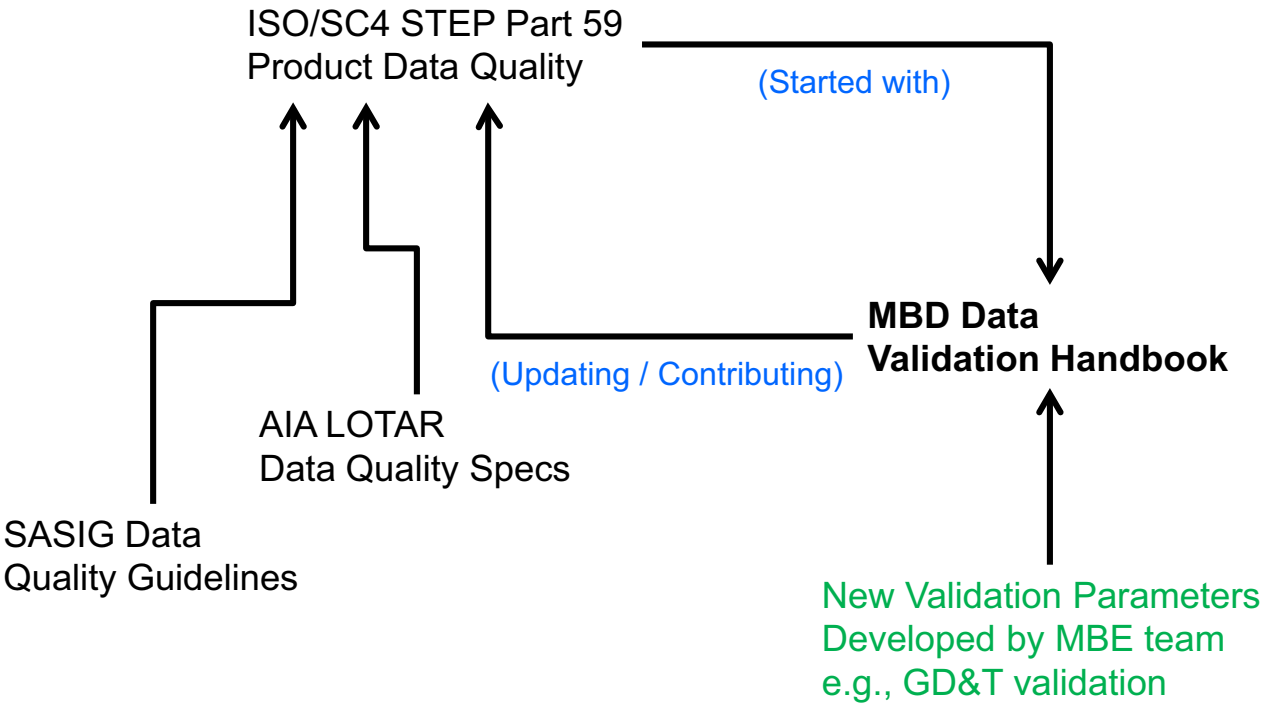

Technical Progress: Validation Handbook

	3D Native Model Quality		3D Derivative Model Equivalence	
Parts and Assemblies	**Valid for Data Exchange**	**Valid for Mfg**	**Precise Equivalent**	**Graphical Equivalent**
Structure				
Geometry				
GD&T				
Other Annotations				
Product data				

Demonstrated
Prototype

Technical Progress: Standards

- Standards activities the MBE team is participating in:
  - MIL STD 31000
  - ASME Y14.41
  - AIA LOTAR
  - ISO STEP GD&T Models
  - ISO STEP AP242 (New standard for product lifecycle support)
  - ISO STEP Part 59 Product Data Quality

Technical Progress

- Continued development of “MBD Data Validation Handbook.”
- Continued development of M2A1 models in preparation for validation and delivery to suppliers
- Continued development of ARDEC “valid for manufacturing” requirements
- Formed PLM validation team and added Jotne USA (PLM software vendor) to the project.
- Performed preliminary evaluation of CH47 data for PLM validation pilot project.
- Held validation team meeting at Picatinny Arsenal, June 29
- Attended CAD Interoperability conference in Denver, CO. Frechette and Huang participated in a panel session on technical data package issues.

Proposed Phase 2 Objectives

TDP validation - TDPs delivered by primes

PLM data requirements analysis for DoD

PLM data validation

BOM

Product structure

Assemblies

PLM validation techniques

Rule-based validation

COTS items

Sufficient data for re-procurement

Provisioning data

NAS numbers

Equivalent components

Other Priorities for Continued Work:

Wire harness and routed systems

Sheet metal

Electronics

Backup Data

Problem

- 3D model Data not Approved for use as “Master” Product Data.
  - MBD-based projects must be able to show 3D models can be validated and maintained satisfactorily – especially to reuse data in downstream applications.
  - Converting 3D MBD data back to 2D format causes significant data loss and errors.
    - Product data must be re-entered in a new system each time the data was needed for a downstream application.
    - Re-entry of product design data is a major source of errors, delays, and excess costs according to several industry and NIST studies.

Technical Objectives

- Validation of MBD Models is Achievable
  - Advanced data analysis and validation techniques make MBD data certification feasible provided that sufficient requirements and metrics can be specified.
  - Several questions must be answered:
    - What does it mean to have a certified model?
    - What are the criteria?
    - What are the figures of merit?
    - What downstream applications are of most concern? What are their data requirements?

Phase 1 Objectives

Site visits & Requirements analysis

Definitions

what is a validated model?

what is a validated TDP?

Analysis of existing standards

Validation process document for Phase 1 scope

Standardization venue for process

Demonstration of validation tools

Establish validation process and tools at Army site

Scope – Component Type

In Scope

- Mechanical parts and assemblies
  - Machined, formed, welded, molded components
    - Can be non-metal
  - Composites

Phase 2

- Wire harness and other routed systems

Out of scope for now

- Electronics
- Software

Scope – Target Applications

In Scope

- Manufacturing

Phase 2

- Assembly
- Archiving

Out of scope

- Design
- Analysis
- Simulation

Scope – Life Cycle Activity

In Scope

- Delivery of TDP from DoD to suppliers

Phase 2

- Delivery of TDP from Primes to DoD
  - Provisioning data
- Long term archiving

Scope – Data Types

In Scope

- MBE schema
- Geometry
- PMI
- CAD Meta data
- PLM data (limited)
- Alternate formats (STEP, PDF (PRC+), visualization formats)

Phase 2

- PLM data validation
  - BOMs
  - Product structure
  - Assemblies
- Rule-based PLM validation
- COTS item data **
- Provisioning data

Impact

- Validating the TDP during the acquisition phase will insure that TDP data meets requirements and will be useable during the system lifecycle.
- Avoid re-creation of TDP data.
- Having the right TDP at the right activities during a products lifecycle will increase efficiency and sustainability and lower cost over the lifecycle.
- Expect the payoff to occur in 2-3 years.
- Programs/Systems that impact study have been proposed: Legacy data conversion, MRAP-ATV

Deliver Valid Data

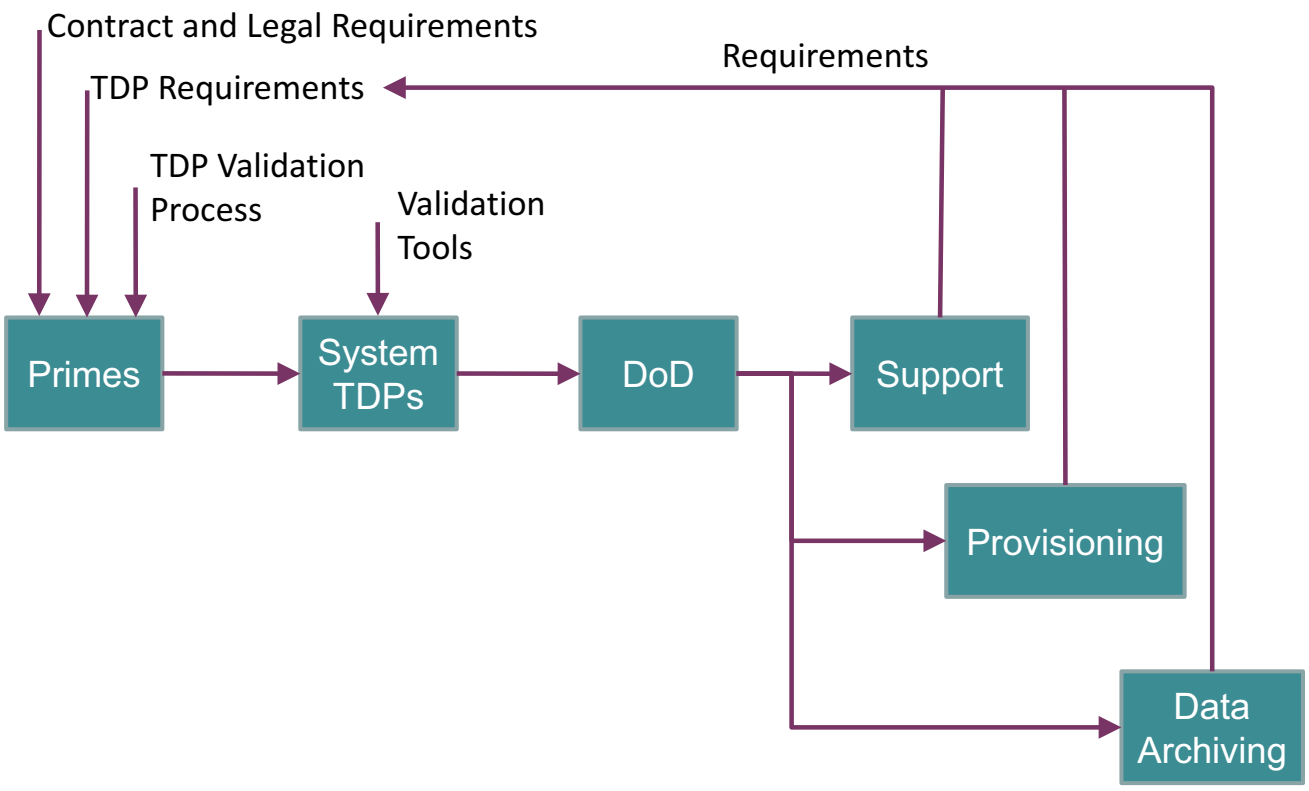

3D TDP to Suppliers

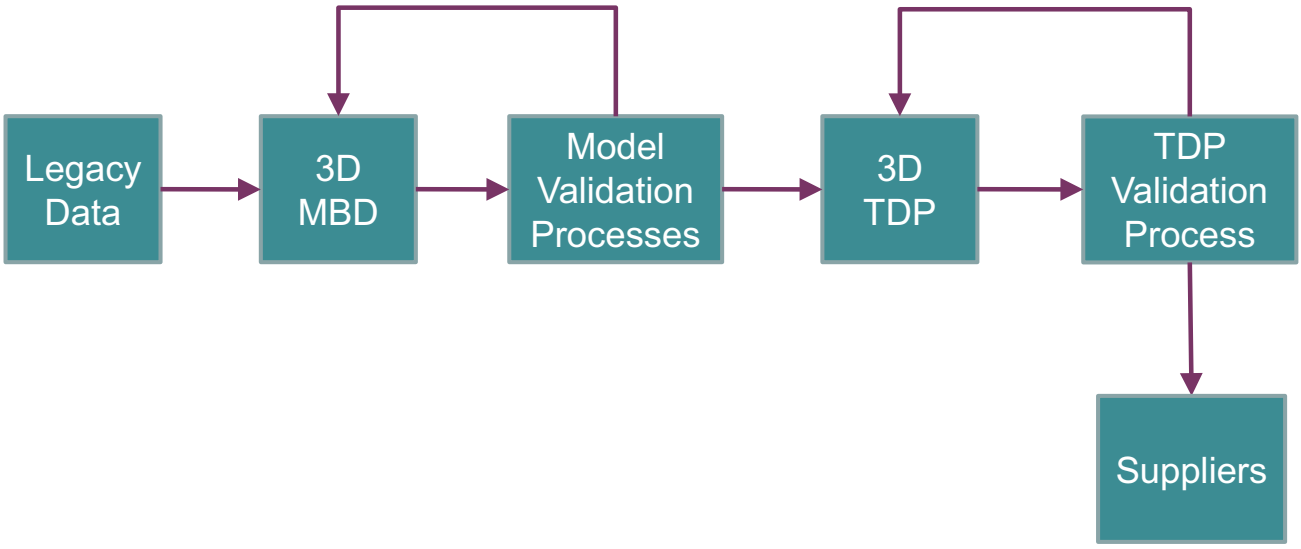

Team Members

- **Army** – Paul Huang (ARL), Paul Villanova (ARDEC Picatinny), Sanjay Parimi (ARDEC Picatinny), Roy Whittenburg (ARDEC-support contractor), John Kreider (ARDEC RIA), Suhair Ghannam (TARDEC)
- **Navy** – Ben Kassel (NAVSEA)
- **DLA** – Ric Norton (DLIS)
- **NIST** – Simon Frechette
- **Industry Primes**
  - **BAE Systems**: Rich Eckenrode, Robert Waggoner
  - **Boeing**: Mike Clare
- **Industry Technology Providers**
  - **PTC:** Mark Nielsen
  - **Delmia:** Bob Brown
  - **ITI TranscenData:** Doug Cheney
  - **Vistagy:** John O'Connor
  - **Elysium:** Ken Tashiro
  - **Jotne**: Jim Martin

New Geometry Criteria for Manufacturing

- Thin Solid Volume
  - Minimum distance through solid **material** between nearly-parallel faces is **less than** a specified threshold
- Thick Solid Volume
  - Minimum distance through solid **material** between nearly-parallel faces is **greater than** a specified threshold
- Narrow Solid Space
  - Minimum distance through **space** around solid between nearly-parallel faces is **less than** a specified threshold
- Tiny Round Faces
  - Radius of round (or fillet) faces is below a specified threshold
- Tiny Hole Faces
  - Diameter of circular faces which form a hole is below a specified threshold
- Narrow Step
  - Narrow portion of a face has sharp edges with opposite angles on either side

New Geometry Criteria Examples

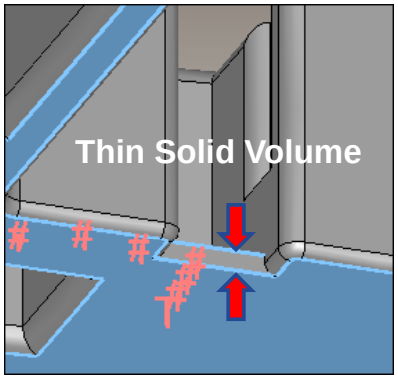

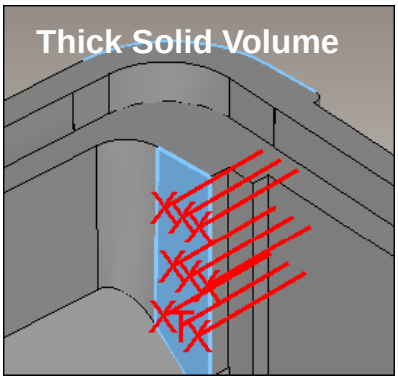

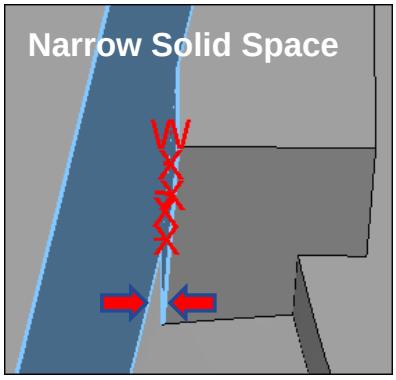

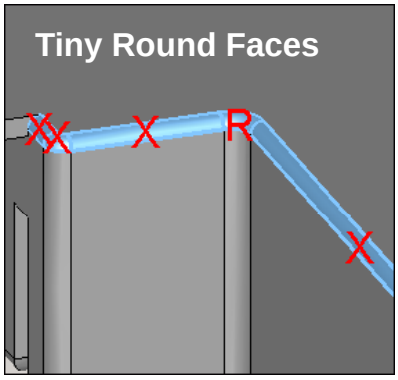

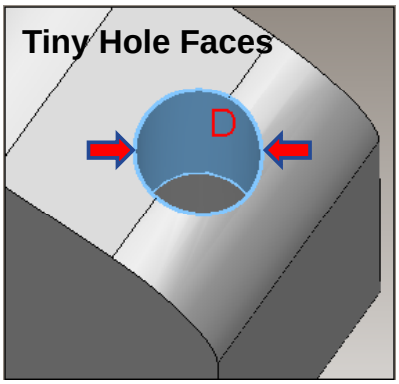

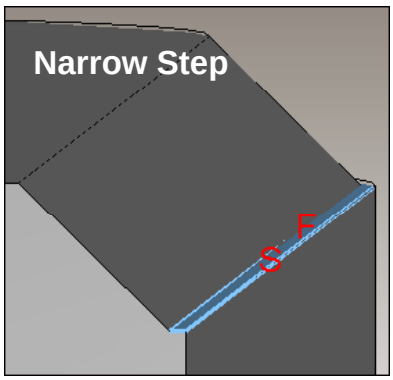

New Geometric Dimensioning and Tolerancing Criteria

- Minimum set of criteria -- severe quality defects
- Based on ISO and ASME GD&T standards
- Capable of algorithmic evaluation for automated model quality checking
- Selected examples documented in following slides
- More complete listing of candidate criteria in separate document:
  - ISO PDQ-S Edition 2 New Quality Criteria - ITI.xlsx

Discontinuous All-Around Geometry

All-around symbol and/or text is specified but the associated geometry does not form a single, continuous set.

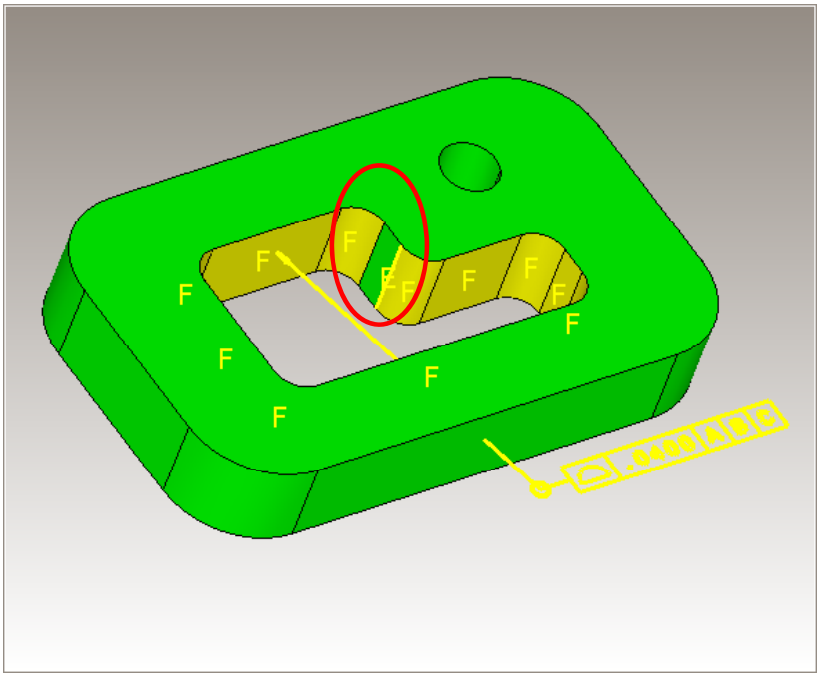

Implicit All-Around Specification

Associated geometry forms a single, continuous set but the all-around condition is not specified by the all-around symbol or using below text (e.g.10 SURFACES)

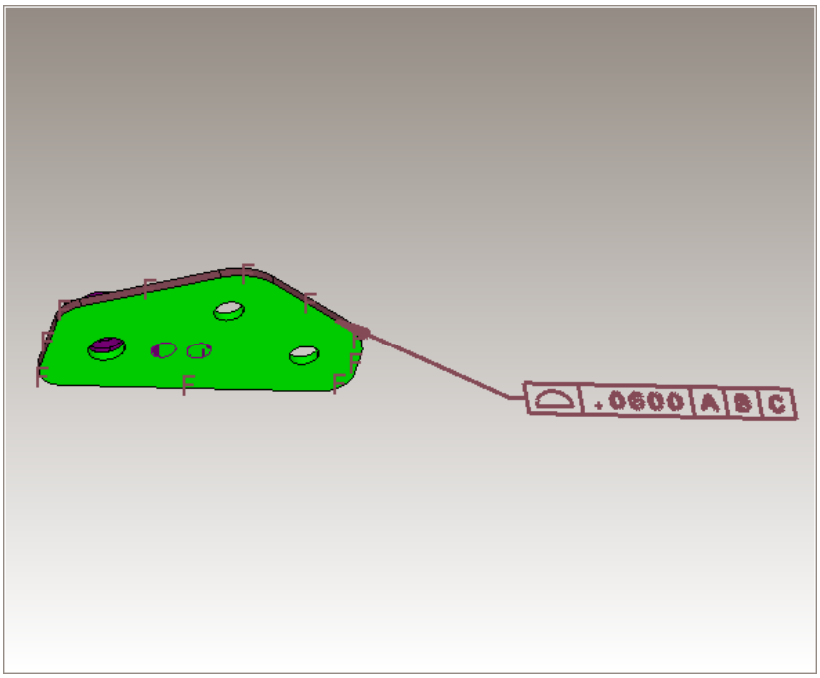

Fake Dimension

Dimension display value does not equal the actual distance between the associated geometric entities.

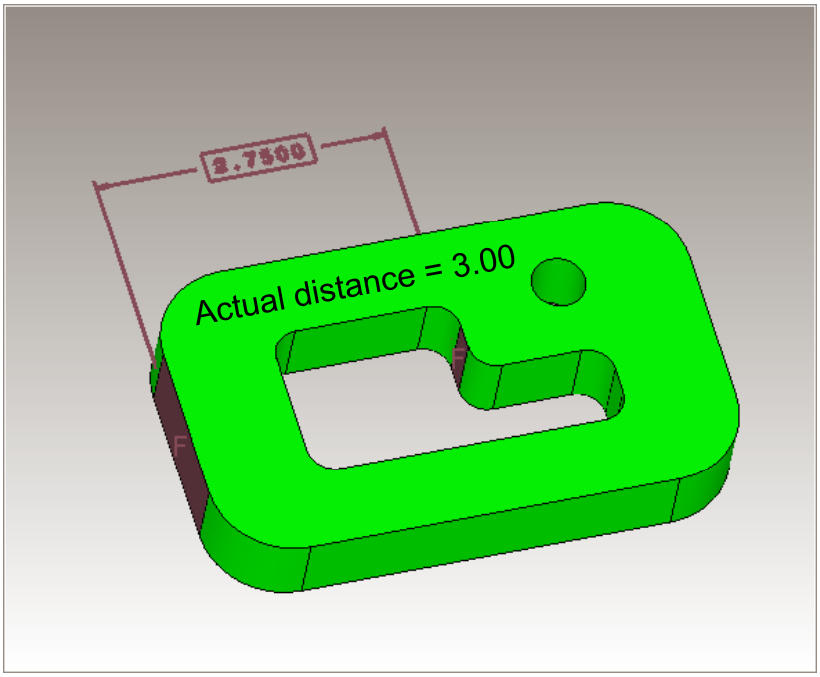

Implicit Annotation Pattern

Pattern is indicated by the associated geometry, but is not explicitly specified in the display text or with multiple leader lines

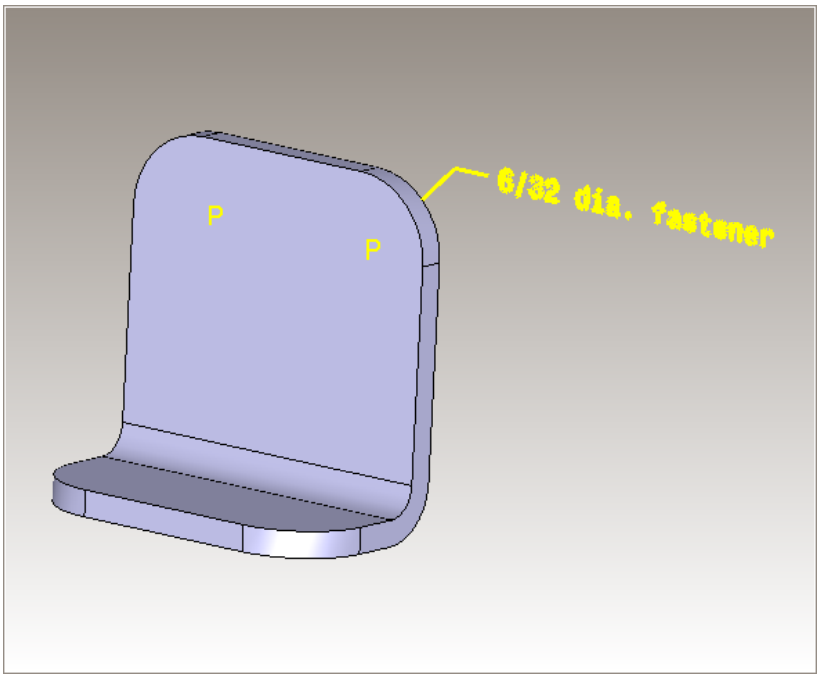

Unconnected Annotation

Annotation has a leader line but is not associated with any geometry

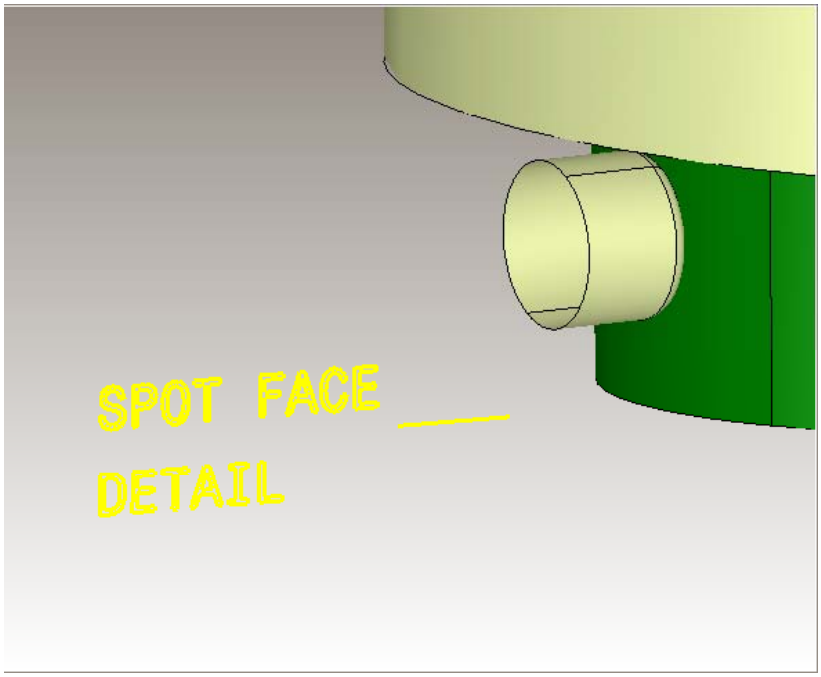

Orphan Datum

Datum has no leader line and associated geometry and is not part of a composite annotation

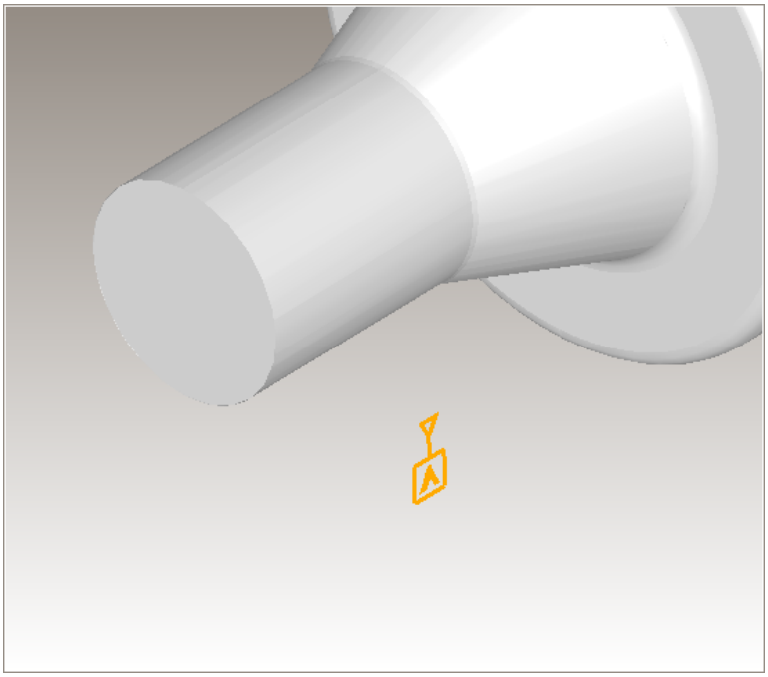

Missing Datum

Geometric tolerance references a datum which is not defined in the model

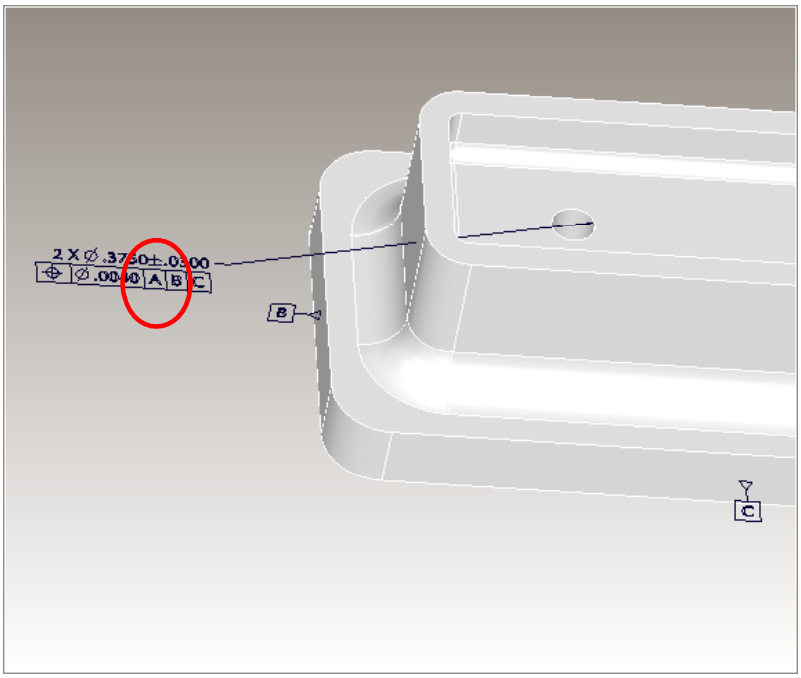

Duplicate Datum Reference Frame

Geometric tolerance references the same datum reference frame more than once

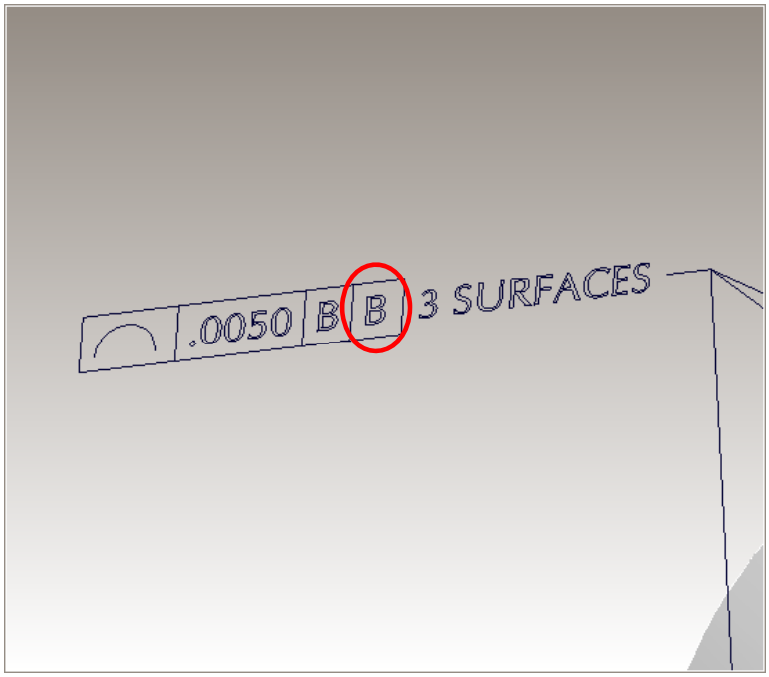

Zero Tolerance Value

Geometric tolerance display value is zero

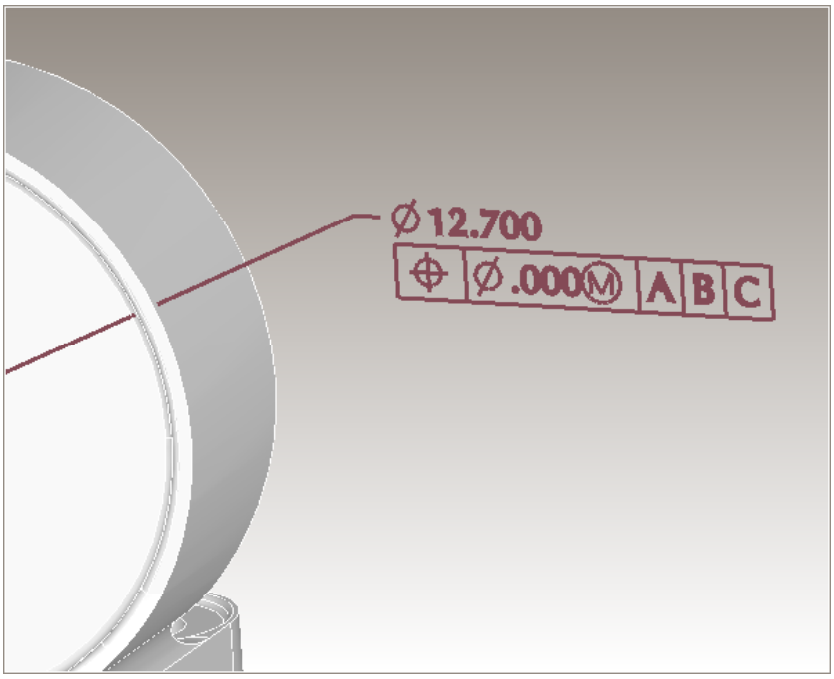

Extraneous Datum

Datum is not referenced by any geometric tolerances in the model

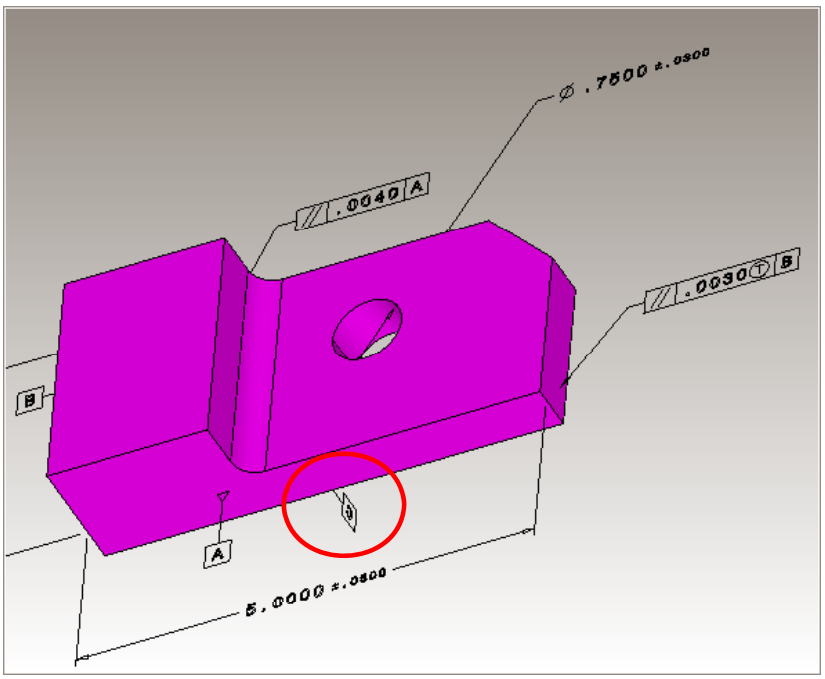

Missing Annotation Graphics

Some or all of the annotation display graphics are missing

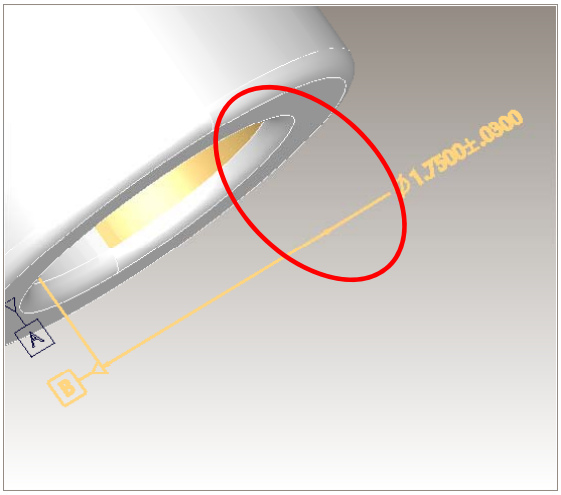

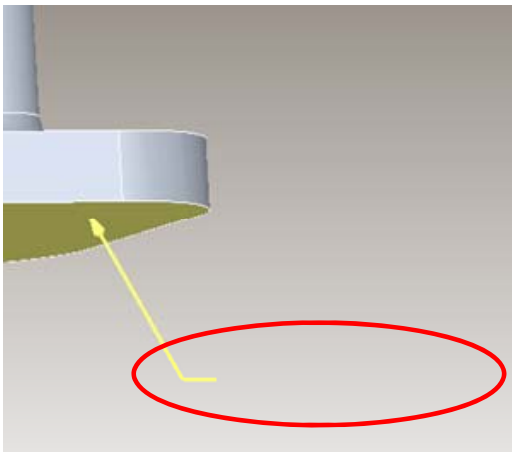

Annotation Type	Attribute 1	Attribute 2	Annot Subtype	Defect Type	Defect Name	Auto?	Defect Description	TDP Doc Reference	Standard Doc Reference
All	Associated Geometry	All-Around	All	Incomplete	Discontinuous All-Around Geometry	Yes	All-around condition is specified but the associated geometry does not form a single, continuous set		
All	Associated Geometry	All-Around	All	Incomplete	Implicit All-Around Specification	Yes	Associated geometry forms a single, continuous set but the all-around condition is not specified		
All	Associated Geometry	Leader Lines	All	Incomplete	Unassociated Annotation	Yes	Annotation has leader line(s) but no associated geometry		
All	Associated Geometry	Leader Lines	All	Incomplete	Unattached Annotation	Yes	Annotation has leader line(s) which are not connected to the associated geometry		
All	Associated Geometry	Leader Lines	All	Incomplete	Unconnected Annotation	Yes	Annotation has associated geometry, but no leader line visually connecting it		
All	Associated Geometry	Units	All	Inconsistent	Inconsistent Annotation Units	Yes	Annotation units are not consistent with the associated geometry units		
All	Display Graphics		All	Incomplete	Missing Annotation Graphics	Yes	Some or all of the annotation display graphics are missing		
All	Leader Lines		All	Inappropriate	Inappropriate Leader Line Type	Yes	Annotation has one or more hidden (dashed) leader lines	PMI Errors 3-1a	
All	Placement		All	Confusing	Buried Annotation	Yes	Annotation graphics (other than leader lines) are placed within a solid		
All	Placement		All	Confusing	Intersecting Annotations	Yes	Annotation graphics intersect each other between view planes		
All	Placement		All	Confusing	Overlapping Annotations	Yes	Annotation graphics overlap each other within the same view plane		
Annotation Set	Associated Geometry	Leader Lines	All	Incomplete	Implicit Annotation Pattern	Yes	Pattern is indicated by disjoint sets of associated geometry, but is not explicitly specified	PMI Errors 1-2e	
Annotation Set	Associated Geometry	Leader Lines	All	Inconsistent	Inconsistent Annotation Pattern	Yes	Pattern is indicated by disjoint sets of associated geometry, but is incorrectly specified	PMI Errors 1-3m	
Annotation Set	Associated Geometry		All	Inconsistent	Inconsistent Annotation Set Geometry	Yes	Annotations within a set have different associated geometry		
Datum	Associated Geometry	Leader Lines	All	Incomplete	Orphan Datum	Yes	Datum has no leader line and associated geometry and is not part of a composite annotation		
Datum	Datum Reference Frame		All	Confusing	Extraneous Datum	Yes	Datum is not referenced by any geometric tolerances in the model		
Datum	Label		All	Inappropriate	Unacceptable Datum Label	Yes	Datum label uses unacceptable character, number or symbol	PMI Errors 2-4, 2-5	
Datum			All	Inconsistent	Duplicate Datum	Yes	Two datums are defined with the same label		
Datum Target	Label		All	Inconsistent	Duplicate Datum Targets	Yes	The same label is used by more than one datum target	PMI Errors 3-1b	
Datum Target	Label		All	Inappropriate	Unacceptable Datum Target Label	Yes	Datum target label has unacceptable format or character	PMI Errors 3-1c, e	
Dimension	Associated Geometry	Leader Lines	All	Incomplete	Orphan Dimension	Yes	Dimension has no leader line and associated geometry and is not part of a composite annotation		
Dimension	Associated Geometry	Tolerance	Linear	Inappropriate	Inappropriate Toleranced Dimension	TBD	Toleranced dimension not only used to define the size of a feature	PMI Errors 1-2a, g	ASME 14.41-2003 3.1.1 (a) (4)
Dimension	Associated Geometry		Counterbore	Inconsistent	Inappropriate Counterbore Symbol	TBD	Counterbore specified for geometry which does not define a counterbore	PMI Errors 1-3l	
Dimension	Associated Geometry		Linear	Inappropriate	Inappropriate Dimension Origin	TBD	Dimension origin (or terminus) references the edge of a cylindrical feature	PMI Errors 1-3n, o	
Dimension	Associated Geometry		Linear	Inconsistent	Incorrect Dimension Geometry Type	Yes	Linear dimension references curved geometry	PMI Errors 1-2b, h, i	
Dimension	Associated Geometry		Radial	Inconsistent	Incorrect Dimension Geometry Type	Yes	Radial or diameter dimension references planar or spherical geometry	PMI Errors 1-2c, f	
Dimension	Associated Geometry		Spherical	Inconsistent	Incorrect Dimension Geometry Type	Yes	Spherical dimension references non-spherical geometry	PMI Errors 1-3p	
Dimension	Nominal Value	Leader Lines	All	Inconsistent	Fake Dimension	Yes	Dimension nominal value does not equal distance between leader line endpoints		
Dimension	Nominal Value	Tolerance	Toleranced	Unrealistic	Unrealistic Dimension Tolerance	Yes	Dimension tolerance zone is greater than nominal value	PMI Errors 1-3j	
Dimension	Tolerance Limits		Basic	Inconsistent	Toleranced Basic Dimension	Yes	Basic dimension has a tolerance specified	PMI Errors 1-3k	
Dimension	Tolerance Limits		Toleranced	Incomplete	Incomplete Toleranced Dimension	Yes	Toleranced dimension (not basic) does not have a tolerance defined	PMI Errors 1-2d	
Dimension	Tolerance Limits		Toleranced	Inconsistent	Inconsistent Dimension Tolerance Limits	Yes	Dimension tolerance has upper limit less than or equal to lower limit		
Dimension	Tolerance Limits		Toleranced	Confusing	Non-Standard Dimension	Yes	Nominal value is not at the median of the tolerance zone		
Geometric Tolerance	Associated Geometry	Leader Lines	All	Incomplete	Orphan Geometric Tolerance	Yes	Geometric tolerance has no leader line and associated geometry and is not part of a composite annotation		
Geometric Tolerance	Associated Geometry		All	Inconsistent	Conflicting Tolerances	Yes	A face has more than one geometric tolerance which references it		
Geometric Tolerance	Associated Geometry		Form	Inconsistent	Incorrect Form Tolerance Type	Yes	Form tolerance references geometry of the incorrect type	PMI Errors 2-6a	
Geometric Tolerance	Associated Geometry		Orientation	Inconsistent	Incorrect Orientation Tolerance Type	Yes	Orientation tolerance applied to a surface which has incorrect orienation relative to specified datum	PMI Errors 2-6g, i	
Geometric Tolerance	Datum Reference Frame		All	Inconsistent	Duplicate Datum Reference Frames	Yes	Geometric tolerance references the same datum reference frame more than once		
Geometric Tolerance	Datum Reference Frame		All	Inconsistent	Indistinct Datum Reference Frame	Yes	Geometric tolerance references a datum reference frame which is defined by its associated geometry	PMI Errors 2-6h	
Geometric Tolerance	Datum Reference Frame		All	Incomplete	Undefined Datum Reference Frame	Yes	Geometric tolerance references a datum reference frame which is not defined in the model	PMI Errors 2-6c	
Geometric Tolerance	Datum Reference Frame		All except Form	Incomplete	Missing Datum Reference Frame	Yes	Non-form tolerance requires a datum reference frame which is not referenced	PMI Errors 2-6e	
Geometric Tolerance	Datum Reference Frame		Form	Inappropriate	Inappropriate Datum Reference Frame	Yes	Form tolerance references a datum reference frame when it should reference none	PMI Errors 2-6b	
Geometric Tolerance	Display value		All	Unrealistic	Zero Tolerance Value	Yes	Geometric tolerance display value is zero		
Geometric Tolerance	Material Condition		Not feature of size	Inappropriate	Inappropriate Material Condition	TBD	Material condition modifier applied to feature without size	PMI Errors 2-6f	
Geometric Tolerance	Tolerance	Diameter	All	Inconsistent	Incorrect Tolerance Zone Type	Yes	Geometric tolerance specifies diameter tolerance zone for planar or spherical geometry	PMI Errors 2-5, 2-6d	
Geometric Tolerance	Tolerance	Linear	All	Inconsistent	Incorrect Tolerance Zone Type	Yes	Geometric tolerance specifies linear tolerance zone for curved geometry	PMI Errors 2-3, 2-4	
Geometric Tolerance	Tolerance	Radius	All	Inconsistent	Incorrect Tolerance Zone Type	Yes	Geometric tolerance uses radius symbol	PMI Errors 2-1	
Geometric Tolerance	Tolerance	Spherical	All	Inconsistent	Incorrect Tolerance Zone Type	Yes	Geometric tolerance specifies spherical tolerance zone for non-spherical geometry	PMI Errors 2-2	

Questions/Comments to Mr.Doug Cheney's Proposal

December 2010

Akihiko Ohtaka

Thank you for elaborate contribution. The followings summarize my questions and comments to the documents provided to us at the Vico Equense meeting.

1. New Geometry Criteria for Manufacturing

Six criteria are proposed. Though they may have some importance, I do not understand for what type of component part they are sufficient. Among automotive component parts, die structure, or some type of power train part such as automotive engine may be close to the target part but sufficiency is questionable for me.

Please let me know what type of component you are imagining.

2. Proposal for minimum set of criteria

<General comments>

(1)Can I understand that proposed criteria are agreed as minimum necessary ones by the DoD/NIST project?

(2)Indicated 49 criteria correspond to PMI Errors&Corrections-1, 2 and 3. Does it imply that PMI Errors&Corrections-4 and later are not top priority issues?

(3)Do you think proposed minimum set also applies to aerospace industry (or LOTAR project)?

<Individual comments>

2.1 severe quality defects – with graphics

(1)Discontinuous All-Around Geometry

Does it mean that specified faces do not form topologically closed region? In other words, intended check algorithm is based on topological connectivity?

(2)Implicit Annotation Pattern

I should check how to indicate pattern by the associated geometry.

Incompleteness of text or leader lines is obvious.

(3)Unconnected Annotation

Is intended check algorithm to search for any leader line which is not connected to part geometry?

(4)Orphan Datum

It is obvious that leader line and associated geometry are missing. What does it mean by 'not part of a composite annotation'?

2.2 severe quality defects – without graphics

Relationship between proposed criterion and PMI Errors&Corrections is very helpful for understanding what is meant by the criterion.

END

PDQR10-04-09

CADdoctor上の生産要件チェック項目

株式会社エリジオン
相馬

2010年12月2日

ELYSIUM ©2006 ELYSIUM

【生産要件検証】1. 射出成形向け

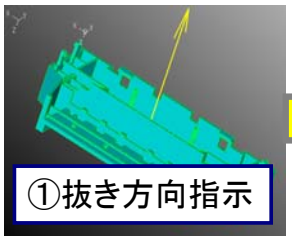

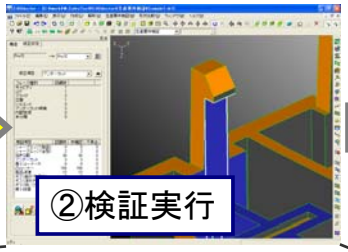

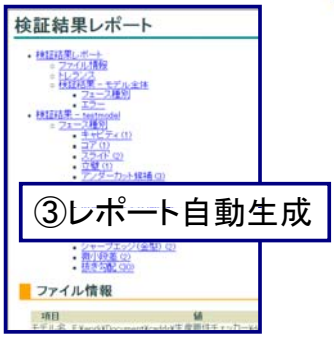

金型成形性チェック

シャープエッジ（金型）	製品深溝	微小段差	最小コーナーR	凸コーナー
金型の強度が問題になるシャープエッジを検出	金型強度が不足している薄肉部位を検出	金型加工時に注意を要する微小な製品段差を検出	金型が加工できない切削工具径以下の製品R部位を検出	金型の切削加工に必要な抜き角度のない製品凸形状を検出

製品成形性チェック

シャープエッジ（製品）	抜き勾配	肉厚チェック
製品の強度・成形性が問題になるシャープエッジを検出	成形に必要な抜き勾配が足りない面を検出	製品強度が不足している薄肉部位を検出

金型構造チェック

アンダーカット	ボス（狭いフラット部）
追加の金型構造が必要になるアンダーカット部位を検出	ボス穴の上面フラット部が狭く、抜きに問題がある部分を検出

ELYSIUM ©2006 ELYSIUM

【生産要件検証】2. 鋳造向け

◇一般的な生産要件

・キャビ/コア/スライドへの面属性判定
・アンダーカット部位の検出
・肉厚検証
・最小フィレットRの検出
・フィレット有無の検証
・成型に必要な抜き勾配有無の検証
・強度や成形性に影響が出る
　シャープエッジ有無の検証
・型抜きに影響するボス形状の検証
　　など

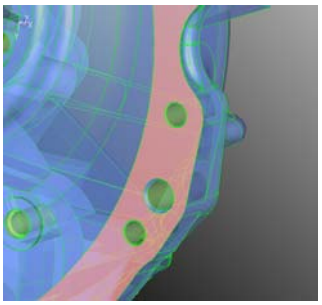

◇特定顧客向け鋳造分野生産要件

・鋳巣不良の未然防止検証
　- 肉厚の検証
　- 除肉可能な部位の判定
・部品合わせ面の検証
　- 標準部品（シール）の使用適合状況の検証
　- バリ取りにおける最適形状の検証
　- 加工穴、鋳抜き穴の位置情報判定
・金型成形性検証
　- 焼付き、バリ軽減のための形状特性の検証
　- 溶湯注入口位置と周辺形状特性の検証
　- 湯流れ方向と形状との関連性検証
　- 冷却管設置の条件判定
　- P/Lの適正検証
・ボス/リブの形状特性検証
・加工代/製品寸法公差の検証
・加工基準面や座に関する検証
　- 基準面の位置や付加情報の検証
　　など

ELYSIUM ©2006 ELYSIUM

GD&T data の“データ品質検査”規格に関する初期検討

I　基本的要求事項

II　GD&T data “データ品質検査”の基本方針

III　GD&T data “データ品質検査”の分析（事例研究）

IV　要確認事項

V　規格開発方針の検討

2010-12-13

設計生産工学研究所: 石川 義明

I　基本的要求事項

- **前提**
  - ISO製図規格は，下記を規定している。
    - 公差分類，公差定義の意味
    - あるべき規定法
    - あるべき表記法（又は表示法）
- **不具合データの発生原因**
  (“ISO 10303-59 の考え方”を継承する)
  - プログラムの間違い　＝＞Erroneous data
    （“起きるはずがない”／“あってはならない”データ）
  - データ入力時の間違い＝＞Inappropriate data
    （データ入力時点で“発生しうる不具合”データ）
- **ユーザ要求**
  - 不具合データは厳密に検出してほしい。
  - 但し，Inappropriate data は，社内ルールで“エラー条件を緩和”することがあり，そのような取り扱いを可能としたい。
    （対応方法：ユーザが，特定のdataについて“データ品質検査”又は，“検査結果の判定”を除外できる，ようにする。）

II　GD&T data “データ品質検査”の基本方針

- **ISO 製図規格が規定している事項**
  - 公差分類と公差定義の意味：
    - 定義する“公差要求仕様”は何か
  - そのあるべき規定法：
    - 何と何との間のどんな関係を規定（検査）するのか
  - そのあるべき表記法：
    - 何と，何との間の
    - どんな関係
    - “許容誤差値”を規定するに当たっての条件
    - 製品上に実現すべきと要求する“公差値（許容誤差値）”

II　GD&T data “データ品質検査”の基本方針

- **GD&T data“データ品質検査”の基本方針**
  - 個々のGD&T データの「“公差分類”は正しい」とおく。
  - 個々のGD&T データが規定した“公差定義の意味”を出発点（又は基準）として，下記の事象を検査し，合否判定する。
    - GD&T データの規定法が公差分類と不整合，
    - GD&T データの表記法／表示法が公差分類と不整合，
    - GD&T データの規定法と表記法／表示法とが不整合。
    - 公差要求値と形状定義データとの定義精度が不整合。

III　GD&T data “データ品質検査”の分析（事例研究）

不具合事象分類 / 公差分類（公差定義の意味）と不具合事象	“データ品質”								“設計品質”	
	寸法・公差の規定法が公差分類と不整合		寸法・公差の表記／表示データが公差分類と不整合			規定法と表記／表示とが不整合		定義精度が不整合		
大分類 / 公差分類（公差定義の意味）	寸法・公差の規定対象が公差分類と不整合	規定対象間の“関係”が公差分類と不整合	寸法・公差の規定対象の表示シンボルが公差分類と不整合	寸法・公差規定における規定条件が公差分類と不整合	公差値（許容誤差値）が公差分類と不整合	規定対象とシンボルが不整合		公差要求値と形状定義データの定義精度が不整合	公差値（許容誤差値）が妥当でない	寸法・公差の規定条件が妥当でない
不具合事象	1.1.1	1.1.2	1.2.1	1.2.2	1.2.3	1.3.1	1.3.2	1.4	2.1	2.2
1 Dimension & Tolerance										
1.1 Linear dimension										
1.1.1 Distance between Line or Plane										
対象形状要素が“平行線分／平行平面”でない	×	×								
R, D等, “平行線分／平行平面”でないシンボルが使われている			×			×				
対象形状要素の“定義精度”が公差要求値より粗い								×		
公差要求値が“適正な精度範囲”外									×	
1.1.2 Chord length										
対象形状要素が“円／円柱の弦”でない	×	×								
“弦”でないシンボルが使われている			×			×				
対象形状要素の“定義精度”が公差要求値より粗い								×		
公差要求値が“適正な精度範囲”外									×	
1.1.3 Diameter/Radious										
対象形状要素が“円／円柱（球／円錐？）”でない	×	×								
“R/D”でないシンボルが使われている			×			×				
対象形状要素での“半径／直径”指定とシンボル“R/D”とが不整合			×							
対象形状要素の“定義精度”が公差要求値より粗い								×		
公差要求値が“適正な精度範囲”外									×	

III　GD&T data “データ品質検査”の分析（事例研究）

不具合事象分類 / 公差分類（公差定義の意味）と不具合事象	“データ品質”								“設計品質”	
	寸法・公差の規定法が公差分類と不整合		寸法・公差の表記／表示データが公差分類と不整合			規定法と表記／表示とが不整合		定義精度が不整合		
大分類 / 公差分類（公差定義の意味）	寸法・公差の規定対象が公差分類と不整合	規定対象間の“関係”が公差分類と不整合	寸法・公差の規定対象の表示シンボルが公差分類と不整合	寸法・公差規定における規定条件が公差分類と不整合	公差値（許容誤差値）が公差分類と不整合	規定対象とシンボルが不整合		公差要求値と形状定義データの定義精度が不整合	公差値（許容誤差値）が妥当でない	寸法・公差の規定条件が妥当でない
不具合事象	1.1.1	1.1.2	1.2.1	1.2.2	1.2.3	1.3.1	1.3.2	1.4	2.1	2.2
1 Dimension & Tolerance (Continued)										
1.2 Arc length dimension										
対象形状要素が“曲面／円／円柱（球／円錐？）上の弧”でない	×	×								
“弧”でないシンボルが使われている			×			×				
対象形状要素の定義精度が公差要求値より粗い								×		
公差要求値が適正な精度範囲外									×	
1.3 Angular dimension										
対象形状要素が“円／円柱（球／円錐？）上の線分／平面”でない	×	×								
“角度”でないシンボルが使われている			×			×				
対象形状要素の定義精度が公差要求値より粗い								×		
公差要求値が適正な精度範囲外									×	
1.4 Diameter/Radious dimension										
対象形状要素が“円／円柱（球／円錐？）”でない	×	×								
“R/D”でないシンボルが使われている			×			×				
対象形状要素での“半径／直径”指定とシンボル“R/D”とが不整合			×							
対象形状要素の“定義精度”が公差要求値より粗い								×		
公差要求値が“適正な精度範囲”外									×	

III　GD&T data “データ品質検査”の分析（事例研究）

不具合事象分類 / 公差分類（公差定義の意味）と不具合事象	“データ品質”								“設計品質”	
	寸法・公差の規定法が公差分類と不整合		寸法・公差の表記／表示データが公差分類と不整合			規定法と表記／表示とが不整合		定義精度が不整合		
	寸法・公差の規定対象が公差分類と不整合	規定対象間の“関係”が公差分類と不整合	寸法・公差の規定対象の表示シンボルが公差分類と不整合	寸法・公差規定における規定条件が公差分類と不整合	公差値（許容誤差値）が公差分類と不整合	規定対象とシンボルが不整合		公差要求値と形状定義データの定義精度が不整合	公差値（許容誤差値）が妥当でない	寸法・公差の規定条件が妥当でない
大分類										
公差分類（公差定義の意味）										
Tolerancing condition										
不具合事象	1.1.1	1.1.2	1.2.1	1.2.2	1.2.3	1.3.1	1.3.2	1.4	2.1	2.2
2 Geometrical Tolerance										
2.1 Single features										
2.1.1 Form tolerances										
2.1.1.1 Straightness										
Tolerance Feature(s)										
Tolerance zone(s)										
Datum(s)										
Restrictive specification(s)										
Theoretically exact dimensions										
Projected tolerance zone										
Maximum material condition										
2.1.1.2 Flatness										
2.1.1.3 Circularity										
2.1.1.4 Cycindricity										

III　GD&T data “データ品質検査”の分析（事例研究）

不具合事象分類 / 公差分類（公差定義の意味）と不具合事象	“データ品質”								“設計品質”	
	寸法・公差の規定法が公差分類と不整合		寸法・公差の表記／表示データが公差分類と不整合			規定法と表記／表示とが不整合		定義精度が不整合		
	寸法・公差の規定対象が公差分類と不整合	規定対象間の“関係”が公差分類と不整合	寸法・公差の規定対象の表示シンボルが公差分類と不整合	寸法・公差規定における規定条件が公差分類と不整合	公差値（許容誤差値）が公差分類と不整合	規定対象とシンボルが不整合		公差要求値と形状定義データの定義精度が不整合	公差値（許容誤差値）が妥当でない	寸法・公差の規定条件が妥当でない
大分類										
公差分類（公差定義の意味）										
Tolerancing condition										
不具合事象	1.1.1	1.1.2	1.2.1	1.2.2	1.2.3	1.3.1	1.3.2	1.4	2.1	2.2
2 Geometrical Tolerance										
2.2 Single or related features										
2.2.1 Form tolerances										
2.2.1.1 Profile of any line										
2.2.1.2 Profile of any surfece										
2.3 Related features										
2.3.1 Orientation tolerances										
2.3.1.1 Parallelism										
2.3.1.2 PerpendicularityFlatness										
2.3.1.3 Angularity										
2.3.2 Location tolerances										
2.3.2.1 Position										
2.3.2.2 Concentricity										
2.3.2.3 Symmetry										
2.3.3 Run-out tolerances										
2.3.3.1 Circularrub-out										
2.3.3.2 Total run-out										

IV　要確認事項

- **要確認事項**
  - **ISO規格の現状確認**
    - “ISO TC 10 & TC213 最新規格”の確認
      - Dimensional tolerance :
        ISO/R 129-1959 => ISO 129: 1985 => ISO 129-1: 2004
      - Geometric tolerance :
        ISO/R 1101/1-1969 => ISO 1101: 1983 => ISO 1101: 2004
      - Maximum/Least Material Principle :
        ISO 1101/2-1974 =>ISO 2692: 1988 => ISO 2692: 2006

      (参照：Current Status of TC 10 & TC 213 Standards for Mechanical Products）
    - “ISO TC 10 & TC213 最新規格”における規定内容の確認
    - STEP規格の“現行GD&T モジュール”の仕様確認
    - “両者間”のギャップ確認
  - **AP 242 に必要となる“GD&T モジュール仕様”の要求事項／レベルアップ事項／要改善事項の洗い出し**

V　規格開発方針の検討

- **“次期GD&T モジュール仕様”開発目標の検討**
  - ISO TC 10 & TC213 最新規格へのキャッチアップ
  - AP 242 に必要となる“GD&T モジュール仕様”の実現
- **“GD&T データ品質規格”の規格開発方針の検討**
  - 下記の“二段階開発アプローチ”をとるか
    - 第一段階：“現行GD&T モジュール”での規格開発
    - 第二段階：“次期GD&T モジュール”との併行開発／同時出版
  - 上記の内第二段階のみ，とするか

ISO TC 184/ SC 4/ WG 3 Nxxxx

Current Status of TC 10 & TC 213 Standards for Mechanical Products

(Discussion document for preparing AP 242)

- V 0.5 –

2010-12-13

Yoshiaki ISHIKAWA,
Vice President MER (Manufacturing Engineering Research Inc.)

Fundamental Principles (1/3)

- Relations between TC 10 & TC 213 Standards and STEP
  - TC 10 & TC 213 Standards are providing
    - technical foundations for Product Design and Production, as
      - tools for design engineering activities, and
      - communication tools from design to production,
    - with standardized
      - human readable "indication",
      - with its "interpretation", which carrying the technical semantics implicated in that "indication",
    - using
      - conventional paper drawings, and
      - expected to be realized in a set of digital engineering tools.

Fundamental Principles (2/3)

- Relations between TC 10 & TC 213 Standards and STEP (Continued)
  - STEP standards are providing "product data model" standards
    - as the technical foundations for the "traceable digital data link" from design to production,
    - with standardized
      - computer sensible "representation" and
      - their human readable "presentation" on computer display and/or (paper) drawings.
    - referring TC 10 & TC 213 standards, as far as they are defined.
  - "Correspondence of technical terms" used in TC 10 & TC 213 and STEP could be understood, as follows;
    - TC 10 & TC 213 Standards <=> STEP

-- "indication"	<=>	-- "presentation"
-- "representation" in simplified representation	<=>	-- "presentation"
-- "interpretation"	<=>	-- "representation"

Fundamental Principles (3/3)

- Classification of type of reference from STEP to TC 10 & TC 213 Standards

  Type of referencing from STEP for Mechanical Products to TC 10 & TC 213 Standards, are classified into following four (4) categories of;
  - Type-A: Data model standard for computer sensible "representation",
  - Type-B: Data model standard for human readable "presentation",
  - Type-C: Instance data using Type-A, and
  - Type-D: Instance data using Type-B.

  Note 1 : Set of instance data, in accordance with Type-C and Type-D, could be organized in a "standard data library".

Historical Review of TC 10 & TC 213 Standards (to be) referred by STEP for Mechanical Products (1/2)

This analysis is employing a matrix of:

– Conceptual and/or Functional classification of TC 10 and TC 213 Standards, in the vertical decomposition of the groups of rows, as follows;

0 Technical documentation,
1 Drawing & Drawing Sheet,
2 General Principles of Presentation,
3 Dimension & Tolerances,
4 Geometric Tolerance,
5 GPS (Geometrical Product Specifications) & Verifications,
6 Simplified Representation,
7 Graphical Symbols,
8 Item Reference & Item Lists, and
9 CAD Usage.

– Historical tracking of TC 10 and TC 213 Standards, in the horizontal decomposition of four columns, as follows;

#1 column: Technical drawings Standards compiled in ISO Handbook 12, 1982, referred by P-101 & AP-201
#2 column: TC 10 & TC 213 Standards compiled in ISO Handbook 2002, referred by STEP for Mechanical Products
#3 column: TC 10 & TC 213 Standards, published after ISO Handbook 2002, (need to be) referred by STEP for Mechanical Products
#4 column: TC 10 & TC 213 Standards referred by (current?) STEP standards

Historical Review of TC 10 & TC 213 Standards (to be) referred by STEP for Mechanical Products (2/2)

Explanatory Notes for Table 1:

– Standard documents are indicated, as follows:
  - TC 10 & TC 213 Standards are indicated as ISO xxxxx, and
  - Each part of STEP standard is indicated as P-4x, P-1xx or AP-2xx.

– "=>" indicates the history of update or transfer of responsible Committee, TC 10 to TC 213

– Notes on #1 column:
  - TC 10 & TC 213 Standards listed in #1 column are explicitly referred in Normative reference or Bibliography in each STEP documents (see Annex D).

– Notes on #2 column:
  - Each (? xxxx ?) marked STEP standard in #2 column dose not explicitly refer the relevant TC 10 & TC 213 Standards, which is expected to be referred, in its Normative reference or Bibliography.

    (need to be confirmed the "reality" after GD&T harmonization)

– Notes on #4 column:
  - It is expected, by AP 242 project, to confirm the actuality of the reference by current STEP for Mechanical Products.

Table 1 Historical Review of TC 10 & TC 213 Standards (need to be) referred by STEP for Mechanical Products (1/7)

	Technical drawings Standards compiled in ISO Handbook 12, 1982, referred by P-101 & AP-201	TC 10 & TC 213 Standards compiled in ISO Handbook 2002, referred by STEP for Mechanical Products	**TC 10 & TC 213 Standards published after ISO Handbook 2002**	TC 10 & TC 213 Standards referred by STEP *: asterisked Standards are referred in Bibliography of STEP Standard <Type-D usage by APs> are expected
	(Standards in parentheses) are not compiled in ISO Handbook underlined Standards are not explicitly referred by STEP			(? Question marked & underlined APs ?) are to be confirmed
0 Technical documentation				
Life cycle model	---	**(ISO 15226: 1999)**		ISO 15226: 1999 (? AP-203 ed2, AP-214 ?)
Document Management		**(IEC 82045-1: 2001)**		IEC 82045-1: 2001 (? AP-203 ed2, AP-214 ?)
	---		**IEC 82045-2: 2004 ISO 11442: 2006**	
1 Drawing & Drawing Sheet				
Vocabulary	---	**ISO 10209-1: 1992**		ISO 10209-1: 1992 (P-101, AP-202)
Sheet Size & Layout	**ISO 5457-1980**			ISO 5457-1980 (? AP-202 ?)
		=> **ISO 5457: 1999**	**ISO 5457: 1999/ Amd 1: 2010**	ISO 5457: 1999 (? AP-203 ed2, AP-214 ?)
Title Blocks	---	ISO 7200: 1984	=> **ISO 7200: 2004**	(? P-101, AP-201, AP-202, AP-203, AP-214?)
2 General Principles of Presentation				
General	---	---	**ISO 128-1: 2003**	ISO 128-1: 2003 (? AP-203 ed2, AP-214 ?)
Views	---	**ISO 10209-2: 1993**		ISO 10209-2: 1993 (? AP-203 ed2, AP-214 ?)
Projection Methods	ISO 128-1982, § 2	=> **ISO 128-30: 2001, ISO 5456-1: 1996**		ISO 128-1982, § 2 (AP-202)
				ISO 128-30: 2001, ISO 5456-1: 1996 (? AP-203 ed2, AP-214 ?)
	ISO 128-1982, § 2	=> **ISO 5456-2: 1996, ISO 5456-3, -4: 1996**		ISO 128-1982, § 2 (P-46, AP202)
				ISO 5456-2, -3, -4: 1996 (? P-46 ?)
Cut & Sections	ISO 128-1982, § 4, § 5			ISO 128-1982, § 4, § 5 (AP-202)
		=> **ISO 128-34, -40, -44, -50: 2001**		ISO 128-34, -40, -44, -50: 2001 (? AP-203 ed2, AP-214 ?)

Table 1 Historical Review of TC 10 & TC 213 Standards (need to be) referred by STEP for Mechanical Products (2/7)

	Technical drawings Standards compiled in ISO Handbook 12, 1982, referred by P-101 & AP-201	TC 10 & TC 213 Standards compiled in ISO Handbook 2002, referred by STEP for Mechanical Products	**TC 10 & TC 213 Standards published after ISO Handbook 2002**	TC 10 & TC 213 Standards referred by STEP *: asterisked Standards are referred in Bibliography of STEP Standard <Type-D usage by APs> are expected
	(Standards in parentheses) are not compiled in ISO Handbook underlined Standards are not explicitly referred by STEP			(? Question marked & underlined APs ?) are to be confirmed
2 General Principles of Presentation (Continued)				
Scale	**ISO 5455-1979**	**Ditto**		(? P-101, AP-201, AP-202, AP-203, AP-214?)
Lines	ISO 128-1982, § 3	=> **ISO 128-20: 1996, -21: 1997, -24: 1999**		ISO 128-1982, § 3 (P-46, AP-202)
				ISO 128 -20,-21,-24 (? AP-203 ed2, AP-214 ?)
Leader lines & reference lines	---	**ISO 128-22: 1999**		ISO 128-22: 1999 (? AP-203 ed2, AP-214 ?)
Lettering	ISO 3098/1-1974	=> **ISO 3098-2: 2000**		ISO 3098/1-1974 (AP-202)
		ISO 3098-0: 1997		ISO 3098-0: 1997 (AP-214)
		ISO 3098-4: 2000, -5: 1997		---
		ISO 3098-3, -6: 2000		---
3D Annotations	---	---	**ISO/DIS 16792: 2004**	---
3 Dimension & Tolerance				
Dimensioning & Tolerancing	ISO/R 129-1959	=> ISO 129: 1985	**ISO 129-1: 2004**	ISO 129: 1985 (P-47, P-101*, AP-201*, AP-214*)
	---	**ISO 8015: 1985**		ISO 8015: 1985 (P-47*, AP-214*)
Linear, Angular	ISO/R 406-1964	=> **ISO 406: 1987**		ISO 406: 1987 (P-47)
Profiles	ISO/R 1660-1971	=> **ISO 1660: 1987**		ISO 1660: 1987 (P-47*)
Cones	ISO 3040-1979	=> ISO 3040: 1990	=> Transferred to TC 213 => **ISO 3040: 2009**	ISO 3040: 1990 (? P-47, AP-224, AP-219, AP-214 ?)
Code system for tolerances	---	(ISO 286-1 & -2: 1988)	=> Transferred to TC 213 => **ISO 286-1 & -2: 2010**	ISO 286-1 & -2: 1988 (P-47, AP-224, AP-219, AP-214)

Table 1 Historical Review of TC 10 & TC 213 Standards (need to be) referred by STEP for Mechanical Products (3/7)

	Technical drawings Standards compiled in ISO Handbook 12, 1982, referred by P-101 & AP-201	TC 10 & TC 213 Standards compiled in ISO Handbook 2002, referred by STEP for Mechanical Products	**TC 10 & TC 213 Standards published after ISO Handbook 2002**	TC 10 & TC 213 Standards referred by STEP *: asterisked Standards are referred in Bibliography of STEP Standard <Type-D usage by APs> are expected
	(Standards in parentheses) are not compiled in ISO Handbook underlined Standards are not explicitly referred by STEP			(? Question marked & underlined APs ?) are to be confirmed
3 Dimension & Tolerance (Continued):				
General Tolrncs.	---	**(ISO 2768-1 & -2: 1989)**		ISO 2768-1&-2: 1989 (? P-47 ?, AP-214)
	(ISO 1829-1975)	**(Ditto)**		(? AP-201, AP-202, AP-203, AP-214 ?)
4 Geometric Tolerances:				
Geometric Tolerances	ISO/R 1101/1-1969	=> ISO 1101: 1983	=> Transferred to TC 213 **=> ISO 1101: 2004**	ISO 1101: 1983 (P-47, AP-224, AP-219, AP-214)
	---	**ISO/TR 5460: 1985**		ISO/TR 5460: 1985 (P-47*, ? AP214 ?)
Symbols	---	**ISO 7083: 1983**		ISO 7083: 1983 (AP-214)
Max. Mat. Princ.	ISO 1101/2-1974	=> ISO 2692: 1988	=> Transferred to TC 213 **=> ISO 2692: 2006**	ISO 2692: 1988 (P-47, AP-214*)
Least Mat. Princ.	---	ISO 2692: 1988/ Amd. 1: 1992		---
Datum	**ISO 5459-1981**	Ditto		ISO 5459-1981 (P-47, AP-202, AP-214*, AP-224, AP-219)
Positioning	---	**(ISO 5458: 1998)**		ISO 5458: 1987 (P-47*, AP-214*)
Projected Tolerance Zone	---	**ISO 10578: 1992**		ISO 10578: 1992 (P-47, AP-214*)
Cones	---	**(ISO 1119: 1998)**		(? AP-201, AP-202, AP-203, AP-214 ?)
Prism	---	**(ISO 2538: 1998)**		(? AP-201, AP-202, AP-203, AP-214 ?)
Non-rigid parts	---	ISO 10579: 1993	**ISO 10579: 2010**	ISO 10579: 1993 (? AP-203 ed2, AP-214 ?)
Castings	---	(ISO 8062: 1994)	**ISO 8062-1, -3: 2007**	<Type-D by AP-201, AP-202, AP-214>

Table 1 Historical Review of TC 10 & TC 213 Standards (need to be) referred by STEP for Mechanical Products (4/7)

	Technical drawings Standards compiled in ISO Handbook 12, 1982, referred by P-101 & AP-201	TC 10 & TC 213 Standards compiled in ISO Handbook 2002, referred by STEP for Mechanical Products	**TC 10 & TC 213 Standards published after ISO Handbook 2002**	TC 10 & TC 213 Standards referred by STEP *: asterisked Standards are referred in Bibliography of STEP Standard <Type-D usage by APs> are expected
	(Standards in parentheses) are not compiled in ISO Handbook underlined Standards are not explicitly referred by STEP			(? Question marked & underlined APs ?) are to be confirmed
5 GPS (Geometrical Product Specifications) & Verifications:				
General features	---	**ISO 14660-1, -2: 1999**	**ISO/TS 17450-1: 2005, TC 1: 2007** **ISO/TS 17450-2: 2002, TC 1: 2004**	---
Spec. Operator				
Straightness	---	---	**ISO/TS 12780-1, -2: 2003**	---
Flatness	---	---	**ISO/TS 12781-1, -2: 2003**	---
Roundness	---	---	**ISO/TS 12181-1, -2: 2003**	---
Cylindricity	---	---	**ISO/TS 12180-1, -2: 2003**	---
Surface Txtr.	---	**(ISO 12085: 1996 & TC 1: 1998)**		ISO 12085:1996 (AP-214 , ? AP219 ?)
Surface Texture	---	**(ISO 4287-1: 1984)**		ISO 4287-1: 1984 (AP-214)
	---	**(ISO 4287: 1997 & TC 1: 1998)**	**ISO 4287: 1997, TC 2: 2005**	
	ISO 1302-1978	**=> ISO 1302: 2002**		ISO 1302: 2002 (AP-214)
Surface Treatments	---	**ISO 15787: 2001**		<Type-D by AP-201, AP-202, AP-214>

Table 1 Historical Review of TC 10 & TC 213 Standards (need to be) referred by STEP for Mechanical Products (5/7)

	Technical drawings Standards compiled in ISO Handbook 12, 1982, referred by P-101 & AP-201	TC 10 & TC 213 Standards compiled in ISO Handbook 2002, referred by STEP for Mechanical Products	**TC 10 & TC 213 Standards published after ISO Handbook 2002**	TC 10 & TC 213 Standards referred by STEP *: asterisked Standards are referred in Bibliography of STEP Standard <Type-D usage by APs> are expected
	(Standards in parentheses) are not compiled in ISO Handbook underlined Standards are not explicitly referred by STEP			(? Question marked & underlined APs ?) are to be confirmed
5 GPS (Geometrical Product Specifications) & Verifications (Continued):				
Measurement				
Thermal Infl.	---	---	**ISO/TR 16015: 2003**	(? AP219 ?)
Surface Txtr	---	**(ISO 13565-1, -2: 1996 & TC 1: 1998)**		ISO 13565-1:1996 (AP-214, ? AP219 ?)
.	---	**(ISO 5436-1: 2000, -2: 2001)**	**ISO 5436-2: 2001/Cor 1: 2006 ISO 5436-2: 2001/Cor 2: 2007**	(? AP219 ?)
Assessment				
Surface Txtr.	---	**(ISO 4288: 1996 & TC 1: 1998)**		(? AP219 ?)
	---	**(ISO 11562: 1996 & TC 1: 1998)**		(? AP219 ?)
Imperfections	---	**(ISO 8785: 1998)**		(? AP219 ?)

Table 1 Historical Review of TC 10 & TC 213 Standards (need to be) referred by STEP for Mechanical Products (6/7)

	Technical drawings Standards compiled in ISO Handbook 12, 1982, referred by P-101 & AP-201	TC 10 & TC 213 Standards compiled in ISO Handbook 2002, referred by STEP for Mechanical Products	**TC 10 & TC 213 Standards published after ISO Handbook 2002**	TC 10 & TC 213 Standards referred by STEP *: asterisked Standards are referred in Bibliography of STEP Standard <Type-D usage by APs> are expected
	(Standards in parentheses) are not compiled in ISO Handbook underlined Standards are not explicitly referred by STEP			(? Question marked & underlined APs ?) are to be confirmed
6 Simplified Representation				
Gears	ISO 2203-1973	Ditto		<Type-D by AP-201, AP-202, AP-214>
Springs	ISO 2162-1973	=> **ISO 2162-1, -2, -3: 1993**		<Type-D by AP-201, AP-202, AP-214>
Screw Threads	ISO 6410-1981	=> **ISO 6410-1, -2, -3: 1993**		<Type-D by AP-201, AP-202, AP-214>
Center Holes	**ISO 6411-1982**	**Ditto**		<Type-D by AP-201, AP-202, AP-214>
Splines & Serrations	---	**ISO 6413: 1988**		<Type-D by AP-201, AP-202, AP-214>
Seals	---	**ISO 9222-1, -2: 1989**		<Type-D by AP-201, AP-202, AP-214>
Rolling Bearing	---	**ISO 8826-1: 1989, -2: 1994**		<Type-D by AP-201, AP-202, AP-214>
Edge	---	**ISO 13715: 2000**		<Type-D by AP-201, AP-202, AP-214>
Screw Threads	---	**(ISO 965-1: 1998)**		ISO 965-1: 1998 (AP-214)
Assembly with Fasteners	---	**ISO 5845-1, -2: 1995**		<Type-D by AP-201, AP-202, AP-214 >
Adhesive, Fold, Pressed Joint	---	**ISO 15785: 2002**		<Type-D by AP-201, AP-202, AP-214>
Castings	---	ISO 10135: 1994	**ISO 10135: 2007**	<Type-D by AP-201, AP-202, AP-214>
7 Graphical Symbols				
Graphic Symbls	---	**(ISO 81714-1: 1999, - 2: 1998)**		

Table 1 Historical Review of TC 10 & TC 213 Standards (need to be) referred by STEP for Mechanical Products (7/7)

	Technical drawings Standards compiled in ISO Handbook 12, 1982, referred by P-101 & AP-201	TC 10 & TC 213 Standards compiled in ISO Handbook 2002, referred by STEP for Mechanical Products	**TC 10 & TC 213 Standards published after ISO Handbook 2002**	TC 10 & TC 213 Standards referred by STEP *: asterisked Standards are referred in Bibliography of STEP Standard <Type-D usage by APs> are expected
	(Standards in parentheses) are not compiled in ISO Handbook underlined Standards are not explicitly referred by STEP			(? Question marked & underlined APs ?) are to be confirmed
8 Item Reference & Item Lists				
Item Reference	**ISO 6433-1981**	**Ditto**		(? P-101, AP-201, AP-202, AP-203, AP-214?)
Item Lists	---	**ISO 7573: 1983**		(? P-101, AP-201, AP-202, AP-203, AP-214?)
9 CAD Usage				
Reqmnt on CAD	---	**ISO/TR 10623: 1991**		(? AP-201, AP-202, AP-203, AP-214 ?)
Hndl of Comptr tchn infrmn	---	**ISO 11442-1, -2, -3, -4: 1993, -5: 1999**		(? AP-201, AP-202, AP-203, AP-214 ?)
Protection Notice	---	**(ISO 16016: 2000)**		<Type-D by AP-201, AP-202, AP-214>
CAD Layers	---	**ISO 13567-1: 1998**		<Type-D by AP-201, AP-202, AP-214>

Annexes

- Annex A TC 10 & TC 213 Standards
  compiled in ISO Handbook 12, Technical drawings, 1982,
  corresponding to the 1st column of Table 1
- Annex B TC 10 & TC 213 Standards
  compiled in ISO Handbook, Technical drawings, 2002,
  corresponding to the 2nd column of Table 1
- Annex C TC 10 & TC 213 Standards
  published after ISO Handbook 2002,
  corresponding to the 3rd column of Table 1
- Annex D STEP for Mechanical Products

Annex A

TC 10 & TC 213 Standards compiled in ISO Handbook 12, Technical drawings, 1982, corresponding to the 1st column of Table 1 (1/2)

A1 Drawing/ Drawing Sheet:

- ISO 5457-1980, *Technical product documentation – Sizes and layout of drawing sheets*

A2 General Principles of Presentation:

- ISO 128-1982, *Technical drawings -- General Principles for Presentation*
- ISO 5455-1979, *Technical drawings -- Scales*
- ISO 3098/1-1974, *Technical drawings -- Lettering -- Part 1: Currently used characters*

A3 Dimension & Tolerances:

- ISO/R 129-1959, *Engineering drawing – Dimensioning*
- ISO/R 406-1964, *Inscription of linear and angular tolerances*
- ISO/R 1660-1971, *Technical drawings – Tolerances of form and of position – Part 3 : Dimensioning and tolerancing of profiles*
- ISO 3040-1979, *Technical drawings -- Dimensioning and tolerancing cones*
- (ISO 1829-1975, *Selection of tolerance zones for general purpose)*

A4 Geometric Tolerances:

- ISO/R 1101/1-1969, *Technical drawings -- Tolerances of form and of position – Part 1: Generalities, symbols, indications on drawings*
- ISO 1101/2-1974, *Technical drawings -- Tolerances of form and of position – Part 2: Maximum material principle*
- ISO 5459-1981, *Technical drawings -- Geometric tolerancing -- Datums and datum-systems for geometric tolerances*

A5 GPS (Geometrical Product Specifications) & Verifications:

- ISO 1302-1978, *Technical drawings – Method of indicating surface texture on drawings*

Annex A

TC 10 & TC 213 Standards compiled in ISO Handbook 12, Technical drawings, 1982, corresponding to the 1st column of Table 1 (2/2)

2010-12-10
Y. Ishikawa

A6 Simplified presentation:

- ISO 2203-1973, *Technical drawings – Conventional representation of gears*
- ISO 2162-1973, *Technical drawings – Representation of springs*
- ISO 6410-1981, *Technical drawings -- Conventional representation of threaded parts*
- ISO 6411-1982, *Technical drawings -- Simplified representation of threaded parts*

A7 Graphical symbols:

A8 Item reference & Item list:

- ISO 6433-1981, *Technical drawings -- Item references*

Annex B

TC 10 & TC 213 Standards compiled in ISO Handbook Technical drawings 2002, corresponding to the 2nd column of Table 1 (1/6)

B0 Technical documentation:

- (ISO 15226: 1999, *Technical product documentation -- Life cycle model and allocation of documents)*
- (IEC 82045-1: 2001, *Document management – Part 1: Principles and methods)*

B1 Drawing & Drawing Sheet:

- ISO 10209-1: 1992, *Technical product documentation -- Vocabulary -- Part 1: Terms relating to technical drawings: general and types of drawing*
- ISO 5457: 1999, *Technical product documentation -- Size and layout of drawing sheets*
- ISO 7200: 1984, *Technical drawings -- Title blocks*

B2 General Principles of Presentation:

- ISO 10209-2: 1993, *Technical product documentation – Vocabulary – Terms relating to projection methods*
- ISO 128-30: 2001, *Technical drawings -- General principles of presentation – Part 30: Basic conventions for views*
- ISO 5456-1: 1996, *Technical drawings -- Projection methods – Part 1: Synopsis*
- ISO 5456-2: 1996, *Technical drawings -- Projection methods – Part 2: Orthographic representation*
- ISO 5456-3: 1996, *Technical drawings -- Projection methods – Part 3: Axonometric representation*
- ISO 5456-4: 1996, *Technical drawings -- Projection methods – Part 4: Central projection*
- ISO 128-34: 2001, *Technical drawings -- General principles of presentation – Part 34: Views on mechanical engineering drawings*

Annex B

TC 10 & TC 213 Standards compiled in ISO Handbook Technical drawings 2002, corresponding to the 2nd column of Table 1 (2/6)

B2 General Principles of Presentation (Continued):

- ISO 128-40: 2001, *Technical drawings -- General principles of presentation – Part 40: Basic conventions for cuts and sections*
- ISO 128-44: 2001, *Technical drawings -- General principles of presentation – Part 44: Sections on mechanical engineering drawings*
- ISO 128-50: 2001, *Technical drawings -- General principles of presentation – Part 50: Basic conventions for representing areas on cuts and sections*
- ISO 128-20: 1996, *Technical drawings -- General principles of presentation – Part 20: Basic conventions for lines*
- ISO 128-21: 1997, *Technical drawings -- General principles of presentation – Part 21: Preparations of lines by CAD systems*
- ISO 128-24: 1999, *Technical drawings-- General principles of presentation – Part 24: Lines on mechanical engineering drawings*
- ISO 128-22: 1999, *Technical drawings -- General principles of presentation – Part 22: Basic conventions and applications for leader lines and reference lines*
- ISO 3098-2: 2000, *Technical product documentation -- Lettering – Part 2: Latin alphabet, numerals and marks*
- ISO 3098-0: 1997, *Technical product documentation -- Lettering -- Part 0: General requirements*
- ISO 3098-4: 2000, *Technical product documentation -- Lettering – Part 4: Diacritical and particular marks for the Latin alphabet*
- ISO 3098-5: 1997, *Technical product documentation -- Lettering – Part 5: CAD lettering of the Latin alphabet, numerals and marks*
- ISO 3098-3: 2000, *Technical product documentation -- Lettering – Part 3: Greek alphabet*
- ISO 3098-6: 2000, *Technical product documentation -- Lettering – Part 6: Cyrillic alphabet*

Annex B

TC 10 & TC 213 Standards compiled in ISO Handbook Technical drawings 2002, corresponding to the 2nd column of Table 1 (3/6)

B3 Dimension & Tolerance:

- ISO 129: 1985, *Technical drawings – Dimensioning – General principles, definitions, methods of execution and special indications*
- ISO 8015: 1985, *Technical drawings – Fundamental tolerancing principle*
- ISO 406: 1987, *Technical drawings – Tolerancing of linear and angular dimensions*
- ISO 1660: 1987, *Technical drawings – Dimensioning and tolerancing of profiles*
- ISO 3040: 1990, *Technical drawings -- Dimensioning and tolerancing – Cones*
- (ISO 286-1: 1988, *ISO system of limits and fits – Part 1: Bases of tolerances, deviations, and fits)*
- (ISO 286-2: 1988, *ISO system of limits and fits – Part 2: Tables of standard tolerance grades and limit deviations for holes and shafts)*
- ISO 2768-1: 1989, *General tolerances -- Part 1: Tolerances for linear and angular dimensions without individual tolerance indications*
- ISO 2768-2: 1989, *General tolerances -- Part 2: Geometrical tolerances for features without individual tolerance indications*

B4 Geometric Tolerances:

- ISO 1101: 1983, *Technical drawings -- Geometric tolerancing -- Tolerancing of form, orientation, location and run-out – Generalities, definitions, symbols, indications on drawings*
- ISO/TR 5460: 1985, *Technical drawings -- Geometric tolerancing -- Tolerancing of form, orientation, location and run-out – Verification principles and methods -- Guidelines*
- ISO 7083: 1983, *Technical drawings -- Symbols for geometrical tolerancing -- Proportions and dimensions*
- ISO 2692: 1988, *Technical drawings -- Geometric tolerancing -- Maximum material principle*
- ISO 2692: 1988/ Amd. 1: 1992, *Technical drawings -- Geometric tolerancing -- Least material requirement*
- (ISO 5458: 1987, *Technical drawings -- Geometric tolerancing -- Positioning tolerancing)*

Annex B

TC 10 & TC 213 Standards compiled in ISO Handbook Technical drawings 2002, corresponding to the 2nd column of Table 1 (4/6)

B4 Geometric Tolerances (Continued):

- ISO 10578:1992, *Technical drawings -- Tolerancing of orientation and location -- Projected tolerance zone*
- (ISO 1119: 1998, *Geometrical Product Specifications (GPS): Series of conical tapers and taper angles)*
- (ISO 2538: 1998, *Geometrical Product Specifications (GPS): Series of angles and slopes on prisms)*
- ISO 10579: 1993, *Technical drawings -- Dimensioning and tolerancing -- Non-rigid parts*
- (ISO 8062: 1994, *Castings – System of dimensional tolerances and machining allowances*

B5 GPS (Geometric Product Specifications) & Verifications:

- ISO 14660-1, -2: 1999, *Geometrical Product Specifications (GPS) -- Geometrical features*
- ISO 12085: 1996 & TC 1: 1998, *Geometrical Product Specifications (GPS) -- Surface texture: Profile method -- Motif parameters*
- (ISO 4287-1: 1984, *Surface roughness -- Terminology -- Part 1: Surface and its parameters)*
- (ISO 4287: 1997 & TC 1: 1998, *Geometrical Product Specification (GPS) -- Surface texture: Profile method -- Terms, definitions and surface texture parameters)*
- ISO 1302: 2002, *Geometrical Product Specifications (GPS) -- Indication of surface texture in technical documentation*
- ISO 15787: 2001, *Technical product documentation -- Heat-treated ferrous parts – Presentation and indications*
- ISO 13565-1: 1996, *Geometrical Product Specifications (GPS) -- Surface texture: Profile method; Surfaces having stratified functional properties -- Part 1: Filtering and general measurement conditions*
- (ISO 13565-1, -2: 1996 & TC 1: 1998, *Geometrical Product Specifications (GPS) – Surface texture: Profile method; Surfaces having stratified functional properties)*
- (ISO 5436-1: 2000, -2: 2001, *Geometrical Product Specifications (GPS) – Surface texture: Measurement standards)*
- (ISO 4288: 1996 & TC 1: 1998, *Geometrical Product Specifications (GPS) – Surface texture: Profile method – Rules and procedures for the assessment of surface texture)*

Annex B

TC 10 & TC 213 Standards compiled in ISO Handbook Technical drawings 2002, corresponding to the 2nd column of Table 1 (5/6)

B5 GPS (Geometric Product Specifications) & Verifications:

- (ISO 11562: 1996 & TC 1: 1998, *Geometrical Product Specifications (GPS) – Surface texture: Profile method – Metrological characteristics of phase correct filters)*
- (ISO 8785: 1998, *Geometrical Product Specifications (GPS) – Surface imperfections – Terms, definitions and parameters)*

B6 Simplified Representation:

- ISO 2162-1, -2, -3: 1993, *Technical product documentation -- Springs*
- ISO 6410-1, -2, -3: 1993, *Technical drawings -- Screw threads and threaded parts*
- ISO 6413: 1988, *Technical drawings -- Representation of splines and serrations*
- ISO 9222-1, -2: 1989, *Technical drawings – Seals for dynamic application*
- ISO 8826-1: 1989, -2: 1994, *Technical drawings -- Rolling bearings*
- ISO 13715: 2000, *Technical product documentation – Edges of undefined shape – Vocabulary and indications*
- (ISO 965-1: 1998, *ISO general -purpose metric screw threads -- Tolerances -- Part 1:Principles and basic data)*
- ISO 5845-1, -2:1995, *Technical drawings -- Simplified representation of the assembly of parts with fasteners – Part 2: Rivets for aerospace equipment*
- ISO 15785: 2002, *Technical product documentation – Symbolic presentation and indication of adhesive, fold and pressed joints*
- ISO 10135: 1994, *Technical drawings -- Simplified representation of moulded, cast and forged parts*

Annex B

TC 10 & TC 213 Standards compiled in ISO Handbook Technical drawings 2002, corresponding to the 2nd column of Table 1 (6/6)

B7 Graphical Symbols:

- (ISO 81714-1: 1999, *Design of graphical symbols for use in the technical documentation of products – Part 1: Basic rules)*
- (ISO 81714-2: 1998, *Design of graphical symbols for use in the technical documentation of products – Part 2: Specification for graphical symbols for a reference library, and requirements for their interchange)*

B8 Item reference & Item list:

- ISO 7573: 1983, *Technical drawings -- Parts lists*

B9 CAD Usage:

- ISO/TR 10623: 1991, *Technical product documentation -- Requirements for computer-aided design and draughting -- Vocabulary*
- ISO 11442-1, -2, -3, -4: 1993, -5: 1999, *Technical product documentation -- Handling of computer-based technical information*
- (ISO 16016: 2000, *Technical product documentation – Protection notices for restricting the use of documents and products)*
- ISO 13567-1: 1998, *Technical product documentation -- Organization and naming of layers for CAD*

Annex C

TC 10 & TC 213 Standards, published after ISO Handbook Technical drawings 2002 , corresponding to the 3rd column of Table 1 (1/3)

C0 Technical documentation:

- IEC 82045-2:2004 *Document management – Part 2: Metadata elements and information reference model*
- ISO 11442: 2006, *Technical product Documentation – document management*

C1 Drawing & drawing sheet:

- ISO 7200: 2004 *Technical product documentation – Data fields in title blocks and document headers*
- ISO 5457: 1999/ Amd 1: 2010, *Technical product documentation -- Size and layout of drawing sheets*

C2 General Principles for Presentation:

- ISO 128-1: 2003, *Technical drawings -- General principles of presentation – Part 1: Introduction and index*
- ISO/DIS 16792: 2004, *Technical product documentation -- Digital product definition data practices*

C3 Dimension & Tolerances:

- ISO 129-1: 2004, *Technical drawings – Indication of dimensions and tolerances – Part 1: General principles*
- ISO 3040: 2009, *Geometrical product specifications (GPS) -- Dimensioning and tolerancing – Cones*
- ISO 286-1: 2010, *Geometrical product specifications (GPS) -- ISO code system for tolerances on linear sizes -- Part 1: Basis of tolerances, deviations and fits*
- ISO 286-2: 2010, *Geometrical product specifications (GPS) -- ISO code system for tolerances on linear sizes -- Part 2: Tables of standard tolerance classes and limit deviations for holes and shafts*

Annex C

TC 10 & TC 213 Standards, published after ISO Handbook Technical drawings 2002 , corresponding to the 4th column of Table 1 (2/3)

C4 Geometric Tolerances:

- ISO 1101: 2004, *Geometrical Product Specifications (GPS) -- Geometrical tolerancing -- Tolerancing of form, orientation, location and run-out*
- ISO 2692: 2006, *Geometrical product specifications (GPS) -- Geometrical tolerancing -- Maximum material requirement (MMR), least material requirement (LMR) and reciprocity requirement (RPR)*
- ISO 10579: 2010, *Geometrical product specifications (GPS) -- Dimensioning and tolerancing -- Non-rigid parts*
- ISO 8062-1: 2007, *Geometrical product specifications (GPS) -- Dimensional and geometrical tolerances for moulded parts -- Part 1: Vocabulary*
- ISO 8062-3: 2007, /TC 2009, *Geometrical product specifications (GPS) -- Dimensional and geometrical tolerances for moulded parts -- Part 3: General dimensional and geometrical tolerances and machining allowances for castings*

C5 GPS (Geometric Product Specifications) & Verifications:

- ISO/TS 17450-1: 2005, *Geometrical Product Specifications (GPS) – General concepts – Part 1: Model for geometrical specification and verifications*
- ISO/TS 17450-2: 2002 & TC 1: 2004, *Geometrical Product Specifications (GPS) – General concepts – Part 2: Basic tenets, specifications, operators and uncertainties*
- ISOTS 12780-1, -2: 2003, *Geometrical Product Specifications (GPS) – Straightness (Part 1: Terms, definitions and parameters, Part 2: Specification operators)*
- ISO/TS 12781-1, -2: 2003, *Geometrical Product Specifications (GPS) – Flatness (Part 1: Terms, definitions and parameters, Part 2: Specification operators)*
- ISO/TS 12181-1, -2: 2003, *Geometrical Product Specifications (GPS) – Roundness (Part 1: Terms, definitions and parameters, Part 2: Specification operators)*
- ISO/TS 12180-1, -2: 2003, *Geometrical Product Specifications (GPS) – Cylindricity (Part 1: Terms, definitions and parameters, Part 2: Specification operators)*

Annex C

TC 10 & TC 213 Standards, published after ISO Handbook Technical drawings 2002 , corresponding to the 4th column of Table 1 (3/3)

C5 GPS (Geometric Product Specifications) & Verifications:

- ISO 4287: 1997, TC 2: 2005, *Geometrical Product Specification (GPS) -- Surface texture: Profile method -- Terms, definitions and surface texture parameters*
- ISO/CD 1302: 2002/ PDAM 1: 2004, *Geometrical product specifications (GPS) -- Indication of surface texture in technical product documentation -- PDAM 1: Representation of specifications in the form of a 3D model*
- ISO/TR 16015: 2003, *Geometrical Product Specifications (GPS) – Systematic errors and contributions to measurement uncertainty of length measurements due to thermal influences*

C6 Simplified Representation:

- ISO 10135: 2007, *Geometrical product specifications (GPS) -- Drawing indications for moulded parts in technical product documentation (TPD)*

C7 Graphical Symbols:

C8 Item reference & Item list:

C9 CAD Usage:

Annex D

2005-10-03
2004-09-24
Y. Ishikawa

STEP for Mechanical Products (1/2)

Each STEP document has each part number under common document number of ISO 10303, and has each specific title under common title of *Industrial automation systems and integration -- Product data representation and exchange*, and to be read as ISO 10303-203, at the top of the list.

Application Protocols:

- ISO 10303-203: 1994, *Industrial automation systems and integration -- Product data representation and exchange -- Part 203: Application protocol: Configuration controlled design*
- ISO/TS 10303-203: 2005, *Industrial automation systems and integration -- Product data representation and exchange -- Part 203: Application protocol: Configuration controlled design* (Pre Ed 2)
- ISO 10303-202: 1996, -- *Part 202: Application protocol: Associative draughting*
- ISO 10303-201: 1994, -- *Part 201: Application protocol: Explicit draughting*
- ISO 10303-214 Ed 2: 2003, -- *Part 214: Application protocol: Core data for automotive mechanical design process*
- ISO 10303-224 Ed 2: 2001, --*Part 224: Application protocol: Mechanical product definition for process planning using machining features*
- ISO/DIS 10303-224 Ed 3: 2005, --*Part 224: Application protocol: Mechanical product definition for process planning using machining features*
- ISO 10303-240: 2005, -- *Part 240: Application protocol: Process plans for machined products*
- ISO 14649-10: 2003 , *Industrial automation systems and integrations -- Physical device control -- Data model for computerized numerical controllers -- Part 10: General process data* <Developed by ISO TC 184/ SC 1/ WG 7 >
- ISO/FDIS 10303-238: 2005, -- *Part 238: Application protocol: Application interpreted model for computerized numerical controllers* <AIM for ISO 14649-10:2003>
- ISO/CD 10303-219: 2005, -- *Part 219: Application protocol: Process: Dimensional Inspection Information Exchange*

Annex D

STEP for Mechanical Products (2/2)

Application Modules:

- ISO/TS 10303-1050: 2005, -- *Part 1050: Application module: Dimension Tolerance*

Common Resources:

- ISO 10303-42: 1994, -- *Part 42: Integrated generic resources: Geometric and topological representation*
- ISO 10303-42 Ed 3: 2003, -- *Part 42: Integrated generic resources: Geometric and topological representation*
- ISO 10303-46: 1994, -- *Part 46: Integrated generic resources: Visual presentation*
- ISO 10303-47: 1997, -- *Part 47: Integrated generic resources: Shape variation tolerances*

- ISO 10303-101: 1994, -- *Part 101: Integrated application resources: Draughting*

- ISO 10303-514: 1999, -- *Part 514: Application interpreted construct: Advanced boundary representation*
- ISO 10303-519: 1999, -- *Part 519: Application interpreted construct: Geometric tolerances*
- ISO 10303-522: 2003, -- *Part 522: Application interpreted construct: Machining Features*
- ISO 10303-505: 2000, -- *Part 505: Application interpreted construct: Drawing structure and administration*
- ISO 10303-504: 2000, -- *Part 504: Application interpreted construct: Draughting annotation*
- ISO 10303-506: 2000, -- *Part 506: Application interpreted construct: Draughting elements*
- ISO 10303-520: 1999, -- *Part 520: Application interpreted construct: Associative draughting elements*

第5回委員会（2月16日）

平成 22 年度　第 5 回 PDQ 国際標準化要件検討委員会

1.　日　時　　2011 年 2 月 16 日(水)　14 時－17 時
2.　場　所　　機械振興会館 4 階　JIPDEC 第 4 会議室
3.　議　題　　・PDQ拡張規格内容(GD&Tを含む)の検討状況
　　・その他

4.　配布資料

- PDQR10-05-01：平成 22 年度第 4 回 PDQ 国際標準化要件検討委員会　議事録
- PDQR10-05-02：GD&T 問題の分類（表示，GD&T 情報，関係）
- PDQR10-05-03：GD&T Criteria コメント（小形）
- PDQR10-05-04：GD&T の質問に対する Doug Cheney からの回答
- PDQR10-05-05：Usage of STEP and JT - Application Scenarios（Daimler）
- PDQR10-05-06：ASD SSG “CAD 3D Electrical Harness Interop” WG Report
- PDQR10-05-07：Data quality test method and criteria for GD&T data（石川）
- PDQR10-05-08：GD&T Draughting standards（石川）
- PDQR10-05-09：PDQ 国際標準化開発委員会へのご意見（JAMA/JAPIA）

以　上

平成 22 年度　第 4 回 PDQ 国際標準化要件検討委員会　議事録

日　時：12 月 14 日(火)　14:00－17:00
場　所：機械振興会館 4 階　JIPDEC 第 4 会議室
出席者：委員長　大高哲彦(NUL)
委員　平岡弘之(中央大)、田中文基(北海道大)、相馬淳人(エリジオン)、石川義明(MER)、田中敬昌(DIPRO)、多賀和春(ホンダ)、小形充生(スタンレー電気)、松永三夫(日立)、三富一弘(MHI)
オブザーバ　土橋俊夫(SJAC)
事務局　鈴木　勝(JIPDEC/DUPC)
（順不同、敬称略）　12 名

配布資料：
- PDQR10-04-01：平成 22 年度第 3 回 PDQ 国際標準化要件検討委員会　議事録
- PDQR10-04-02：GD&T　三富委員インプット
- PDQR10-04-03：JEITA における PMI/GD&T 検討状況（松永）
- PDQR10-04-04：PMI Errors Analysis - NIST TDP team response（Doug Cheney）
- PDQR10-04-05：Certification of 3D MBD Data（NIST）
- PDQR10-04-06：PDQ-S Edition 2 New Quality Criteria (PowerPoint)（Doug Cheney）
- PDQR10-04-07：PDQ-S Edition 2 New Quality Criteria (Excel)（Doug Cheney）
- PDQR10-04-08：Questions/Comments to Mr. Doug Cheney's Proposal（大高）
- PDQR10-04-09：CADdoctor 上の 生産要件チェック項目（相馬）
- PDQR10-04-10：GD&T data の"データ品質検査"規格に関する初期検討（石川）
- PDQR10-04-11：Current Status of TC 10 & TC 213 Standards for Mechanical Products（石川）

議　事：
1. 配付資料の確認（事務局）

2. 前回議事録の確認（大高委員長、PDQR10-04-01）
(事務局)発行された EN9300 文書は日本規格協会から購入できるが、この委員会には図書購入予算がないので、必要な組織で購入していただきたい。ASME Y14.41 と Y14.5 は JIPDEC で購入した。

3. 10 月の SC4 会議での PDQ プロジェクト説明資料（大高委員長、配布資料には含まれず）
- "Status of PDQ Standard Extension"（PDQ 規格開発委員会で配布）について紹介した。

4. SC4 会議での Doug Cheney からの入手資料紹介（大高委員長、PDQR10-04-04, -05, -06, -07）
(1) NIST のプロジェクトの Phase 1 報告資料（PDQR10-04-05）
- **この資料はこの委員会内限りとして、外部には再配布しないで下さい。**
- 長期保存の対象は形状データだけではなくて、GD&T データを伴う必要がある。

(相馬)この資料にある"Validation Handbook"は、自分の会社の米国法人（Elysium、プロジェクトメンバー）が担当している。
(石川)Slide 29 で TC10 や TC213 の規格が参照されていない。
→(大高)STEP AP242 の開発で考慮されるはずなので、そこに必要な情報を伝えればよい。
(大高)Slide 31 にある Phase 2 の目標は、SJAC でもチェックした方がよい。
(2) 生産準備用データの品質チェック項目案（PDQR10-04-06 の前半）
- これは米国 DoD の装備品における要件を示しているが、相馬委員の資料 PDQR10-04-09 は、主として自動車会社の人から聞いている、射出成形と鋳造におけるデータ品質問題をとりまとめ、その一部のチェック機能をソフトウェアツールで提供していることを示している。

(多賀)生産準備は非常に範囲が広く、各社のノウハウが含まれているので、標準化になじむのか疑問である。

→(大高)この程度では実用上も役立たないと思う。
→(石川)生産準備の専門家である坂本委員（本日欠席）の意見を聞いてみる。
(3) GD&T の minimum set 案（PDQR10-04-06 の後半）

- **田中文基委員が PDQ 規格開発委員会のために、PDQR10-04-06 と PDQR10-04-07 の内容、および前回配布した PMI エラーの事例の図を組み合わせて編集した資料を、この委員会のメンバーにも配布する。**

→(事務局)12/15 に配布した。

5. Doug Cheney からの入手資料に対する質問／コメント（大高委員長、PDQR10-04-08）

- 午前中の PDQ 規格開発委員会でのコメントを反映させたものを Doug に送付する。

→(事務局)12/21 に大高委員長から送付した。

6. GD&T に関する航空宇宙業界の状況（三富委員、PDQR10-04-02）

- MRJ の設計図面は ASME の仕様に準拠している。
- 航空機では顧客別の号機管理が普通である。製造途中で当初の引き宛先が変わることもある。

(大高)データ変換時間が掛かりすぎるというのはどのくらいのレベルか。
→(三富)CAD→Viewer などのデータ変換が、夜間バッチ処理で 1 日分を終了できないと困る。
(田中敬昌)今後の長期保存で考えているデータ形式は Viewer か STEP か。
→(三富)STEP の方が望ましい。
→(大高)部品表関係についてはどうか。
→(三富)部品表データは以前から STEP AP232 で Boeing から受け取っているが、BOM としてはよくできている。
(石川)エンジンメーカは、機体とのインタフェース部分のデータを多分 CATIA に変換している。機体の製造継続期間中は、データの再利用性が必要だと思う。号機管理は顧客別に設計が異なるために必要である。FAA の指針にデータ品質要件の規定があれば教えてほしい。
→(三富)あるというように設計部門から聞いたことがある。
→(石川)日米欧が共同で ISO 9001 を航空宇宙業界向けにカスタマイズした AS 9100/EN 9100/JIS Q 9100 にはトレーサビリティについて細かく規定されている。
(相馬)quality check の有効性には、特定のデータに注目した品質と、フォーマット変換での再現性の品質の両方があるが、航空機業界の関心は後者が中心か。
→(三富)機体データは CATIA に統一されているが、何らかの理由でフォーマット変換が必要になる場合があり、その際の品質チェックが役に立つ。
(相馬)Doug Cheney から、CAD のバージョンアップで形状データが微妙に変化し、それと連動した寸法表記が変わってしまうという例を見せられた。彼から入手した PMI エラーの資料は、一つの CAD のデータの中での整合性の問題であり、これがあると変換が失敗するのでチェックが役立つと言えるが、上記の問題に対しては別の対応が必要である。
(石川)設計側の CAD を統一しても、解析や生産技術にデータを渡す際には変換が必要になることがあるが、変換で出る問題が設計に起因することもある。
→(松永)設計側では十分に問題をチェックできないので、後工程から指摘されるのを期待している面もある。
(大高)PDQR10-04-07 にある GD&T の minimum set の 44 項目の妥当性を各工業会で評価してほしい（追加配布した田中文基委員の資料を活用）。次回の PDQ 規格開発委員会が 1/25(火)に開催されるので、できればその前の 1/20(木)くらいまでにお願いしたい。
→(多賀)この 44 項目以外にもあったのか。
→(大高)以前に入手した資料（前回の配布資料 PDQR10-03-02）にはもっとあったが、今回絞った根拠を Doug に質問する。

7. JEITA における PMI/GD&T 検討状況（松永委員、PDQR10-04-03）
(1) 3D 単独図ガイドラインの改訂

- JAMA/JAPIA の 3D 単独図ガイドラインを引き継いで、JAMA/JAPIA とも相談しながら JEITA 用に改訂している。JEITA ではアセンブリ関係が 3 次元データの中で一番広範囲に使われているので、その関連の情報を充実させている。

- 組み立てると形状が変化するゴムやバネでは、変形の前後の両方の形状データが必要であるが、CAD の機能では実現できないので、annotation での対応を検討している。

(2) 3 次元データ活用分科会活動

- 金型データ連携は、補助資料がなくても 3D 単独図データだけで渡せるようにするための検討であるが、金型工業会からはノウハウのデータは入れないように求められている。
- 3 次元測定連携には、東大の鈴木宏正教授や産総研の大沢さんが関係している。

(3) 幾何公差推進分科会(仮称)の立上げ

- 日本の電気業界では、幾何公差に関して独立の原則を採用しているが、市販のツールでは ASME 系のテーラーの原理が優勢であり、TC213 もテーラーの原理を採用している。将来的にはこの活動の成果を、3D 単独図ガイドラインに盛り込む。

(大高)幾何公差ベースにするメリットは何か。

→(松永)設計品質の面では、国内ではデータの受け側が対応しているが、幾何公差ベースにすれば海外にそのまま提出して通用する。

→(大高)自動車業界でも同じ状況ではないか。

→(松永)JAMA の 3D 単独図の活動が終了しているので、JEITA の方でとりまとめている。

(大高)先ほどの 44 項目の評価依頼はまだ早いか。

→(松永)これはこれで意味がある。海外企業の日本法人などで進んでいるところもある。JEITA が業界として取り組むことを宣言することに意味がある。

(田中敬昌)PDQR10-04-03 の 2.(ア)の 3 次元 CAD の機能評価に関して、JAMA の場合は指定した仕様に従って作れるかを CAD ベンダに、また見えるかをビューアベンダにそれぞれ機能要件を確認しているが、JEITA は CAD ベンダだけに確認しているのか。

→(松永)現時点では CAD ベンダだけで、ビューアはその次にする。

(石川)2.(イ)の金型データ連携活動の関係者に、Doug の資料（PDQR10-04-06）や相馬委員の資料（PDQR10-04-09）の中の金型に関する品質問題の項目をチェックしてもらったらどうか。

→(松永)JEITA 版の基本モデルを作成して、金型業界が受け取れるかをチェックしている。抜き勾配の関係やモデルの省略をどこまでできるかを評価して決めることになっている。

→(大高)GD&T は含まれていないのか。

→(松永)含まれている。

8. GD&T data の“データ品質検査”規格に関する初期検討（石川委員、PDQR10-04-10）

- 米国のプロジェクトから入手した PMI エラーの資料（前回の配布資料 PDQR10-03-02）が個別の事例から出発しているので、もう少し別の整理をしたいと思って作成した。

(大高)エラー条件の緩和は threshold や accuracy だけではだめか。

→(石川)それだけでは足りないように思うが、具体案はまだない。

(大高)Part 59 から継承する Erroneous/Inappropriate の分類とこの表とはどう対応しているのか。

→(石川)まだ明確ではない。現在の CAD の幾何公差は曖昧であるため、両者の区別が難しい。

9. Current Status of TC 10 & TC 213 Standards for Mechanical Products（石川委員、PDQR10-04-11）

- 2005 年に活動した SC4 の GD&T タスクフォースに合わせて作成した資料の改訂版である。

(大高)履歴情報としては役立つが、PDQ 規格開発チームへの提言と AP242 プロジェクトへの提言とに分けてほしい。

→(石川)そのように改訂するが、2002 年版の ISO Handbook と現在との違いは見ておく必要がある。

(事務局)SC4 の GD&T タスクフォースの最終報告書の資料を石川さんに送付する。→12/15 送付した。

(大高)Doug の 44 項目を石川さんの資料と付き合わせてチェックしてほしい。できれば 1/20 までに希望する。

(松永)公差を全部記入すると煩雑になるので省略したいが、その場合のデフォールト処理はどうなっているか。

→(石川)まず一般公差の考えが活きている。それぞれの製品ごとに一般公差の値は変えてよいこと

になっている。
→(松永)書かない公差を自動的にチェックされても困るので、書かれた公差だけをチェックするのがよい。

10. 次回の予定（最終回）

- 日時：2 月 16 日(水)　14 時－17 時
  午前中に PDQ 規格開発委員会を開催する。

以上

GD&T問題の分類　表示，GD&T情報，関係

No	Annotation Type	Attribute 1	Attribute 2	Annot Subtype	Defect Type	Defect Name	Auto?	Defect Description	TDP Doc Reference	Standard Doc Reference		Issue on the presentation of GD&T inf.	Issue on the representation of GD&T inf.	Inconsistecy of GD&T inf. and associated shape representation
1	All	Associated Geometry	All-Around	All	Incomplete	Discontinuous All-Around Geometry	Yes	All-around condition is specified but the associated geometry does not form a single, continuous set			Ohtaka	NA	NA	Associated geometry does not satisfy all-around condition indicated by GD&T
2	All	Associated Geometry	All-Around	All	Incomplete	Implicit All-Around Specification	Yes	Associated geometry forms a single, continuous set but the all-around condition is not specified			Ohtaka	May be the problem of GD&T presentation	May be the problem of GD&T representation	Associated geometry satisfy all-around condition but all-arround requirement of GD&T inf. is
3	All	Associated Geometry	Leader Lines	All	Incomplete	Unassociated Annotation	Yes	Annotation has leader line(s) but no associated geometry			Ohtaka	Annotation having a leader line is not associated with any geometry	May be the problem of GD&T representation	NA
4	All	Associated Geometry	Leader Lines	All	Incomplete	Unattached Annotation	Yes	Annotation has leader line(s) which are not connected to the associated geometry			Ohtaka	Similar to the above. The difference with the above is unclear.	May be the problem of GD&T representation	NA
5	All	Associated Geometry	Leader Lines	All	Incomplete	Unconnected Annotation	Yes	Annotation has associated geometry, but no leader line visually connecting it			Ohtaka	Could simply be an issue of presentation	NA	NA
6	All	Associated Geometry	Units	All	Inconsistent	Inconsistent Annotation Units	Yes	Annotation units are not consistent with the associated geometry units			Ohtaka	May be the problem of GD&T presentation	May be the problem of GD&T representation	Units of associated geometry and annotation are
7	All	Display Graphics		All	Incomplete	Missing Annotation Graphics	Yes	Some or all of the annotation display graphics are missing			Ohtaka	Annotation display graphics are missing.	May be the problem of GD&T	NA
8	All	Leader Lines		All	Inappropriate	Inappropriate Leader Line Type	Yes	Annotation has one or more hidden (dashed) leader lines	PMI Errors 3-1a		Ohtaka	Inappropriate leader line type	NA	NA
9	All	Placement		All	Confusing	Buried Annotation	Yes	Annotation graphics (other than leader lines) are placed within a solid			Ohtaka	Confusing presentation of	NA	NA
10	All	Placement		All	Confusing	Intersecting Annotations	Yes	Annotation graphics intersect each other between view planes			Ohtaka	Inappropriate presentation of annotation	NA	NA
11	All	Placement		All	Confusing	Overlapping Annotations	Yes	Annotation graphics overlap each other within the same view plane			Ohtaka	Inappropriate presentation of annotation	NA	NA
12	Annotation Set	Associated Geometry	Leader Lines	All	Incomplete	Implicit Annotation Pattern	Yes	Pattern is indicated by disjoint sets of associated geometry, but is not explicitly specified	PMI Errors 1-2e		Kikuchi	The display text or leader lines are not displayed.	Adequate datum target is not specified.	When datum target is more than two, "nx" quantity specification is not correctly specified.
13	Annotation Set	Associated Geometry	Leader Lines	All	Inconsistent	Inconsistent Annotation Pattern	Yes	Pattern is indicated by disjoint sets of associated geometry, but is incorrectly specified	PMI Errors 1-3m		Kikuchi	NA	NA	The "nx" quantity is not used in correct number ?
14	Annotation Set	Associated Geometry		All	Inconsistent	Inconsistent Annotation Set Geometry	Yes	Annotations within a set have different associated geometry			Kikuchi	Annotations within a set have different associated geometry	Annotations within a set have different associated geometry	NA
15	Datum	Associated Geometry	Leader Lines	All	Incomplete	Orphan Datum	Yes	Datum has no leader line and associated geometry and is not part of a composite annotation			Kikuchi	Datum has no leader line and associated geometry.	Datum has no associated geometry.	NA
16	Datum	Datum Reference Frame		All	Confusing	Extraneous Datum	Yes	Datum is not referenced by any geometric tolerances in the model			Kikuchi	Datum reference is not displayed.	Datum is not referenced by any geometric tolerances in the model	NA

17	Datum	Label		All	Inappropriate	Unacceptable Datum Label	Yes	Datum label uses unacceptable character, number or symbol	PMI Errors 2-4, 2-5		Kikuchi	Datum label's character is displayed in unacceptable style.(ex using multi	Datum label uses unacceptable character, number or symbol.	NA
18	Datum			All	Inconsistent	Duplicate Datum	Yes	Two datums are defined with the same label			Kikuchi	NA	Two datums are defined with the same label.	NA
19	Datum Target	Label		All	Inconsistent	Duplicate Datum Targets	Yes	The same label is used by more than one datum target	PMI Errors 3-1b		Kikuchi	NA	The same label is used by more than one datum target.	NA
20	Datum Target	Label		All	Inappropriate	Unacceptable Datum Target Label	Yes	Datum target label has unacceptable format or character	PMI Errors 3-1c, e		Kikuchi	Datum target label has unacceptable format or character. (ex. using multi byte character)	Datum target label has unacceptable format or character.	NA
21	Dimension	Associated Geometry	Leader Lines	All	Incomplete	Orphan Dimension	Yes	Dimension has no leader line and associated geometry and is not part of a composite annotation			Kikuchi	Dimension has no leader line and associated geometry.	Dimension is not part of a composite annotation.	NA
22	Dimension	Associated Geometry	Tolerance	Linear	Inappropriate	Inappropriate Toleranced Dimension	TBD	Toleranced dimension not only used to define the size of a feature	PMI Errors 1-2a, g	ASME 14.41-2003 3.1.1 (a) (4)	Kikuchi	NA	Toleranced dimension is used to locate or orient features.	NA
23	Dimension	Associated Geometry		Counterbore	Inconsistent	Inappropriate Counterbore Symbol	TBD	Counterbore specified for geometry which does not define a counterbore	PMI Errors 1-3l		Soma/KGK	Inappropriate symbol is displayed.	NA	Dimension is inconsistent with the type of associated feature.
24	Dimension	Associated Geometry		Linear	Inappropriate	Inappropriate Dimension Origin	TBD	Dimension origin (or terminus) references the edge of a cylindrical feature	PMI Errors 1-3n, o		Soma/KGK	NA	Dimension is defined between inappropriate shape	NA
25	Dimension	Associated Geometry		Linear	Inconsistent	Incorrect Dimension Geometry Type	Yes	Linear dimension references curved geometry	PMI Errors 1-2b, h, i		Soma/KGK	Appropriate symbol is missing.	NA	NA
26	Dimension	Associated Geometry		Radial	Inconsistent	Incorrect Dimension Geometry Type	Yes	Radial or diameter dimension references planar or spherical geometry	PMI Errors 1-2c, f		Soma/KGK	Inappropriate symbol is excessively	NA	NA
27	Dimension	Associated Geometry		Spherical	Inconsistent	Incorrect Dimension Geometry Type	Yes	Spherical dimension references non-spherical geometry	PMI Errors 1-3p		Soma/KGK	Inappropriate symbol is excessively	NA	NA
28	Dimension	Nominal Value	Leader Lines	All	Inconsistent	Fake Dimension	Yes	Dimension nominal value does not equal distance between leader line endpoints			Soma/KGK	Different value from representation is displayed.	NA	NA
29	Dimension	Nominal Value	Tolerance	Toleranced	Unrealistic	Unrealistic Dimension Tolerance	Yes	Dimension tolerance zone is greater than nominal value	PMI Errors 1-3j		Soma/KGK	NA	Constraint of attribute value(s) is	NA
30	Dimension	Tolerance Limits		Basic	Inconsistent	Toleranced Basic Dimension	Yes	Basic dimension has a tolerance specified	PMI Errors 1-3k		Soma/KGK	Inappropriate display style is used.	Constraint of attribute value(s) is	NA
31	Dimension	Tolerance Limits		Toleranced	Incomplete	Incomplete Toleranced Dimension	Yes	Toleranced dimension (not basic) does not have a tolerance defined	PMI Errors 1-2d		Soma/KGK	Tolerance value is missing.	NA	Dimension without tolerance is associated fith a feature which requires tolerance.
32	Dimension	Tolerance Limits		Toleranced	Inconsistent	Inconsistent Dimension Tolerance Limits	Yes	Dimension tolerance has upper limit less than or equal to lower limit			Soma/KGK	NA	Constraint of attribute value(s) is	NA
33	Dimension	Tolerance Limits		Toleranced	Confusing	Non-Standard Dimension	Yes	Nominal value is not at the median of the tolerance zone			Soma/KGK	NA	Constraint of attribute value(s) is	NA
34	Geometric Tolerance	Associated Geometry	Leader Lines	All	Incomplete	Orphan Geometric Tolerance	Yes	Geometric tolerance has no leader line and associated geometry and is not part of a composite annotation			Soma/KGK	Leader line is missing.	Feature is not referred.	Associated feature does not exist.
35	Geometric Tolerance	Associated Geometry		All	Inconsistent	Conflicting Tolerances	Yes	A face has more than one geometric tolerance which references it			Soma/KGK	Different value from representation is displayed.	Duplicated and different tolerances for a feature exist.	NA
36	Geometric Tolerance	Associated Geometry		Form	Inconsistent	Incorrect Form Tolerance Type	Yes	Form tolerance references geometry of the incorrect type	PMI Errors 2-6a		Soma/KGK	Inappropriate symbol is displayed.	NA	Tolerance is inconsistent with the type of associated feature.

37	Geometric Tolerance	Associated Geometry		Orientation	Inconsistent	Incorrect Orientation Tolerance Type	Yes	Orientation tolerance applied to a surface which has incorrect orienation relative to specified datum	PMI Errors 2-6g, i		Soma/KGK	Inappropriate symbol is displayed.	NA	Tolerance is inconsistent with the geometry of associated feature.
38	Geometric Tolerance	Datum Reference Frame		All	Inconsistent	Duplicate Datum Reference Frames	Yes	Geometric tolerance references the same datum reference frame more than once			Soma/KGK	Inappropriate datum reference is excessively	Constraint of attribute value(s) is not fulfilled.	NA
39	Geometric Tolerance	Datum Reference Frame		All	Inconsistent	Indistinct Datum Reference Frame	Yes	Geometric tolerance references a datum reference frame which is defined by its associated geometry	PMI Errors 2-6h		Soma/KGK	Inappropriate datum reference is displayed.	Constraint of attribute value(s) is not fulfilled.	NA
40	Geometric Tolerance	Datum Reference Frame		All	Incomplete	Undefined Datum Reference Frame	Yes	Geometric tolerance references a datum reference frame which is not defined in the model	PMI Errors 2-6c		Soma/KGK	Inappropriate datum reference is displayed.	Constraint of attribute value(s) is not fulfilled.	NA
41	Geometric Tolerance	Datum Reference Frame		All except Form	Incomplete	Missing Datum Reference Frame	Yes	Non-form tolerance requires a datum reference frame which is not referenced	PMI Errors 2-6e		Soma/KGK	Datum reference is not displayed.	Datum is not referred.	NA
42	Geometric Tolerance	Datum Reference Frame		Form	Inappropriate	Inappropriate Datum Reference Frame	Yes	Form tolerance references a datum reference frame when it should reference none	PMI Errors 2-6b		Soma/KGK	Datum reference is excessively displayed.	Datum should not be referred.	NA
43	Geometric Tolerance	Display value		All	Unrealistic	Zero Tolerance Value	Yes	Geometric tolerance display value is zero			Soma (KGK)	Meaningful value, but display is invalid.	Value itself is too small.	NA
44	Geometric Tolerance	Material Condition		Not feature of size	Inappropriate	Inappropriate Material Condition	TBD	Material condition modifier applied to feature without size	PMI Errors 2-6f		Soma/KGK	Inappropriate modifier symbol is displayed.	MMC refers inappropriate feature without size.	NA
45	Geometric Tolerance	Tolerance	Diameter	All	Inconsistent	Incorrect Tolerance Zone Type	Yes	Geometric tolerance specifies diameter tolerance zone for planar or spherical geometry	PMI Errors 2-5, 2-6d		Soma/KGK	Inappropriate symbol is displayed.	Inappropriate type of geometric tolerance is refered.	NA
46	Geometric Tolerance	Tolerance	Linear	All	Inconsistent	Incorrect Tolerance Zone Type	Yes	Geometric tolerance specifies linear tolerance zone for curved geometry	PMI Errors 2-3, 2-4		Soma/KGK	Inappropriate symbol is displayed.	Inappropriate type of geometric tolerance is refered.	NA
47	Geometric Tolerance	Tolerance	Radius	All	Inconsistent	Incorrect Tolerance Zone Type	Yes	Geometric tolerance uses radius symbol	PMI Errors 2-1		Soma/KGK	Inappropriate symbol is displayed.	Inappropriate type of geometric tolerance is refered.	NA
48	Geometric Tolerance	Tolerance	Spherical	All	Inconsistent	Incorrect Tolerance Zone Type	Yes	Geometric tolerance specifies spherical tolerance zone for non-spherical geometry	PMI Errors 2-2		Soma/KGK	Inappropriate symbol is displayed.	Inappropriate type of geometric tolerance is refered.	NA

Suzuki Masaru

差出人: <MITSUO_OGATA@stanley.co.jp>
宛先: "PDQ国際標準化要件検討委員会" <ec-pdq-req@tower.jipdec.or.jp>
送信日時: 2011年1月14日 20:33
件名: [Ec-pdq-req:211] Re: Fw: 本年度第4回PDQ国際標準化要件検討委員会の議事録案(検討資料のお願い)

鈴木様、PDQ国際標準化要件検討委員の皆様、いつもお世話になります。
スタンレー電気の小形です。
今年もよろしくお願い致します。（あと1回で終了となりますけど・・・）

本宿題の件ですが、個人的な意見ですけど、簡単にご連絡します。
・44項目自体に関しては、妥当性が有ると思います。
・ただ、これで全てだとすると、少し寸法公差に偏っている様に思えます。
・寸法自体の品質項目（規格に準じた、正しい表記になっているか）も充実して欲しい感じです。
・形状データと違って、殆どが人の目で認識する物なので、重なっていないかとか、決められた
　場所に収まっているかなど、ご認識を生まず、正確に設計意図が伝わる事が重要だと思います。。
・品質をチェックする場面も、形状と異なり設計過程ではあまりないと思います。
　間違いがあれば、その場で修正します。（これも形状データと性質が異なるところです）
・形状と同様、データは流通する事が前提で、かつデータ変換は必須なので、データ変換後の
　品質が重要ですが、形状と違い、変換後だけを見て「正しい/間違っている」と判断出来ない項目も
　有るかも知れません。（形状も多少このケースは有りますが）
　この場合、データ変換の前後で比較する様な事が必要になります。
・3D図面も多く取り入れていますが、ユーザに取って有効なもの（実務で使えるもの）にするとすれば、
　殆ど3D図面が流通していない現状では、まず2D図面を優先した方が良いと思います。
　（もちろん、2D/3Dともカバー出来る物が良いですが）

以上、今回の宿題とは関係ない事も書いてしまいましたが、よろしくお願いします。

尚、JAMA/JAPIAとしての最終要望は、多賀さんが中心となりまとめを行う予定です。
1月20日には間に合わないと思いますが、2月16日にはお出し出来ると思います。
（2月16日の午前中に最終調整をします）

以上、よろしくお願いします。

宛先: "ec-PDQ-Req" <ec-PDQ-Req@tower.jipdec.or.jp>

ec-pdq-req-bounces@tower.jipdec.or.jp

写し:

送信者: ec-pdq-req-bounces@tower.jipdec.or.jp

PDQR10-05-04

Suzuki Masaru

差出人: "Suzuki Masaru" <suzuki-masaru@jipdec.or.jp>
宛先: "鈴木　勝(JIPDEC/ECPC)" <suzuki-masaru@jipdec.or.jp>
送信日時: 2011年1月31日 11:44
添付: snap.png
件名: [Ec-pdq-wg:640] Re: Some Questions

Ohtaka-san,

Please see my responses below (starting with "DCC>").

-Doug CheneyCAD Interoperability Consultant
CADIQ Product ManagerITI TranscenData
303-319-8781 (Denver)

1. New Geometry Criteria for Manufacturing

Six criteria are proposed. Though they may have some importance, I do not understand for what type of component part they are sufficient.
Among automotive component parts, die structure, or some type of power train part such as automotive engine may be close to the target part but sufficiency is questionable for me.Please let me know what type of component you are imagining and expected usage scenario of those criteria.

DCC> The Thick Solid Volume is useful for cast and molded parts.
DCC> If the thresholds for the other criteria are set to extreme values, then they will identify geometric conditions which are unrealistic and problematic for any downstream process which assumes the geometry is manufacturable, e.g. toolpath generation, die design, finite element analysis, rapid prototyping, additive manufacturing, etc.

2. Proposal for minimum set of criteria
<General comments>

(1)Can I understand that proposed criteria are agreed as minimum necessary ones by the DoD/NIST project?
DCC> The DoD/NIST project has been suspended since October due to funding renewal problems. Therefore no additional work has been done to confirm that these represent the minimum necessary criteria. We anticipate funding to resume in February.
(2)Indicated 44 criteria correspond to PMI Errors&Corrections-1, 2 and 3. Does it imply that PMI Errors&Corrections-4 and later are not top priority issues?
DCC> This is simply an area that is incomplete (see previous answer)

(3)Do you think proposed minimum set also applies to aerospace industry (or LOTAR project)?

DCC> Definitely

<Individual comments>

2.1 severe quality defects ? with graphics
(1)Discontinuous All-Around GeometryDoes it mean that specified faces do not form topologically closed region? In other words, intended check algorithm is based on topological connectivity?

DCC> Yes

(2)Implicit Annotation PatternI should check how to indicate pattern by the associated geometry. Incompleteness of text or leader lines is obvious.

DCC> The problem occurs when the associated geometry is broken into disjoint sets which indicate a pattern, but the text and/or leader lines do not specify the pattern.

(3)Unconnected AnnotationIs intended check algorithm to search for any leader line which is not connected to part geometry?

DCC> See below

(4)Orphan DatumIt is obvious that leader line and associated geometry are missing. What does it mean by 'not part of a composite annotation'?

DCC> The datum feature symbol is not attached to another annotation such as a geometric tolerance

2.2 severe quality defects ? without graphics

Relationship between proposed criterion and PMI Errors&Corrections is very helpful for understanding what is meant by the criterion. The followings are some questions;

(1)Difference of “Unassociated Annotation”, “Unattached Annotation” and “Unconnected Annotation” is not enough clear for us. Would you explain it?
DCC> The terms are open to discussion, but the three concepts are important:
Unassociated: Leader line is defined but no geometric entity associations are defined
Unattached: Leader line and geometry associations are defined, but the leader line does not indicate the correct (associated) geometry
Unconnected: Geometry associations are defined but no leader line is defined

(2)Is it necessary to differentiate “Intersecting Annotations” and “Overlapping Annotations”?

DCC> I think these problems are different, with Overlapping being more significant because Saved Views (Captures in CATIA) are usually defined to show annotations on different planes separately; whereas annotations within the same plane tend to be visible in the same Saved View.
(3)The concept of “Inconsistent Annotation Set Geometry” is not enough clear for us. Would you explain with some example?

DCC> The second leader line down from the upper right corner in the attached image is attached to what we call an annotation set. If the dimension and geometric position tolerance in this set, for example, have different faces associated with them then this would create an inconsistent and ambiguous condition since by being grouped together with the same leader line these are implied to apply to the same geometric feature.

(4)The concept of “Non-Standard Domension” is not enough clear for us. Would you explain with some example?

DCC> Suppose the geometric feature that is referenced by the above dimension (.500 +/- 0.030) is modeled with a size of .510 rather than .500, then this would not be the usual value expected for the “nomimal” geometry.

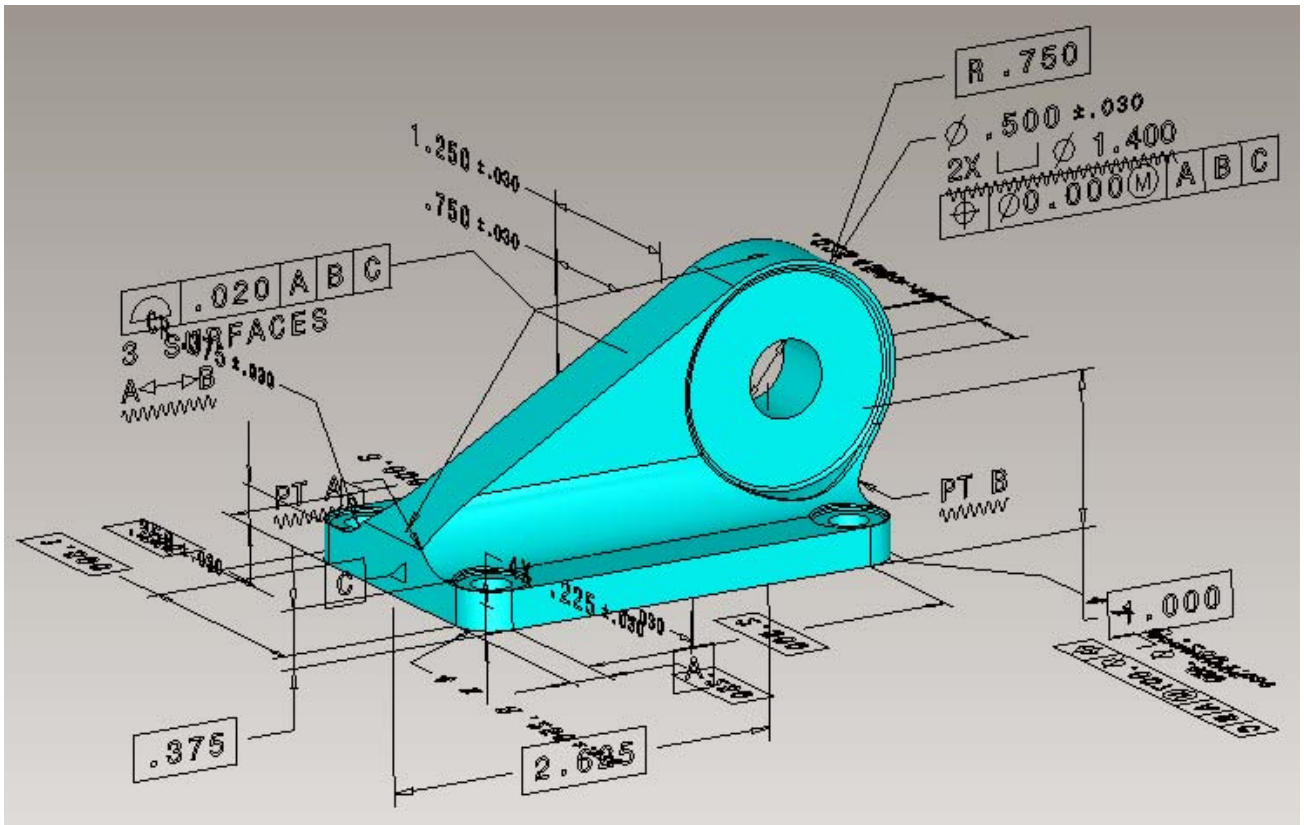

DAIMLER

Usage of STEP and JT

Application Scenarios

Meeting *PPC Step/JT scenarios walkthrough*
Dornbirn (Austria)

DAIMLER

Agenda

1. ProSTEP iViP Board decisions regarding STEP AP 242 XML and JT
2. Presenation of 2 scenarios (2011-02-09) plus additional comments
   - #1: Export of visualisation data from EDM system Smaragd
   - #2: Visualisation of data with SAM-light and JT2GO Viewer
3. Questions from Mr. Ohtaka (2011-02-08)
4. Discussion
5. Next Steps

ProSTEP iViP Board decisions regarding AP 242 XML and JT

- AP 242 XML shall be established as the IT backbone
  - Exchange of structure, meta-, kinematics data, etc.
  - Requirements not covered by JT version 9.5 shall be supported by AP 242
- JT is intended for visualization purposes, only
- AP 242 XML and JT shall complement each other, but be independent from each other
- With AP 242 an efficient XML schema shall be provided
- The ProSTEP iViP Association shall demonstrate policy-making authority

Industry sector / Use Case	Automotive	Aerospace	Medicine	Cooperation
Simulation	JT+STEP	[illegible]	[illegible]	STEP
Design	JT+STEP	[illegible]	STEP	JT+STEP
Visualization	JT	JT+STEP	JT	JT+STEP

Example - only for illustration

Possible starting point: VDA 4961/2 (SE checklist)

Establishing Leadership in IT-Based Engineering

ProSTEP iViP

Scenarios

#1: Export of visualisation data from EDM system Smaragd

#2: Visualisation of data with SAM-light and JT2GO Viewer

#1: Export of visualisation data from EDM system Smaragd

Current functionality at a glance

Smaragd | Export Package

CATIA V5 assembly structure
plus ~~STEP AP 214 CC6~~
STEP AP 242 XML

JT assembly structure
plus ~~STEP AP 214 CC6~~
~~and PLMXM~~L

STEP AP 242 XML

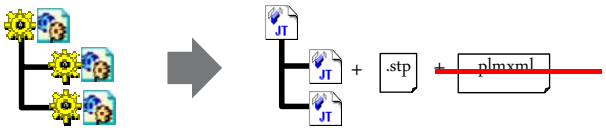

STEP AP 242 XML

During the export from Smaragd, an appropriate ~~STEP AP214 CC6~~ file will be generated in order to incorporate structural information and other metadata.

Workaround: Because several applications cannot handle STEP AP214 CC6 in a satisfactory manner, we also add~~ed a PLMXML file to~~ the JT files.

No Workaround

#1: Export of visualisation data from EDM system Smaragd

Supported formats

The following visualisation data formats are used by the Daimler AG in processes.

These files are converted from the original CATIA V5 files by a EDM batch process.

3D formats

Name	File ending	Application
JT (Jupiter Tessellation)	.jt	DMU, Reduction of the data amounts, Neutral data format

2D formats

Name	File ending	Application
TIF/TIFF (Tagged Image Format)	.tiff	Neutral format for drawings

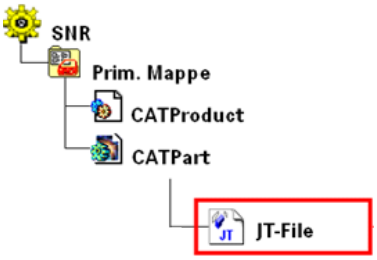

DAIMLER

#1: Export of visualisation data from EDM system Smaragd

Smaragd: Create a SWAN Send Job, Prepare Data, Select JT Files, Send Job

SWAN: Select Receiver, Select Medium

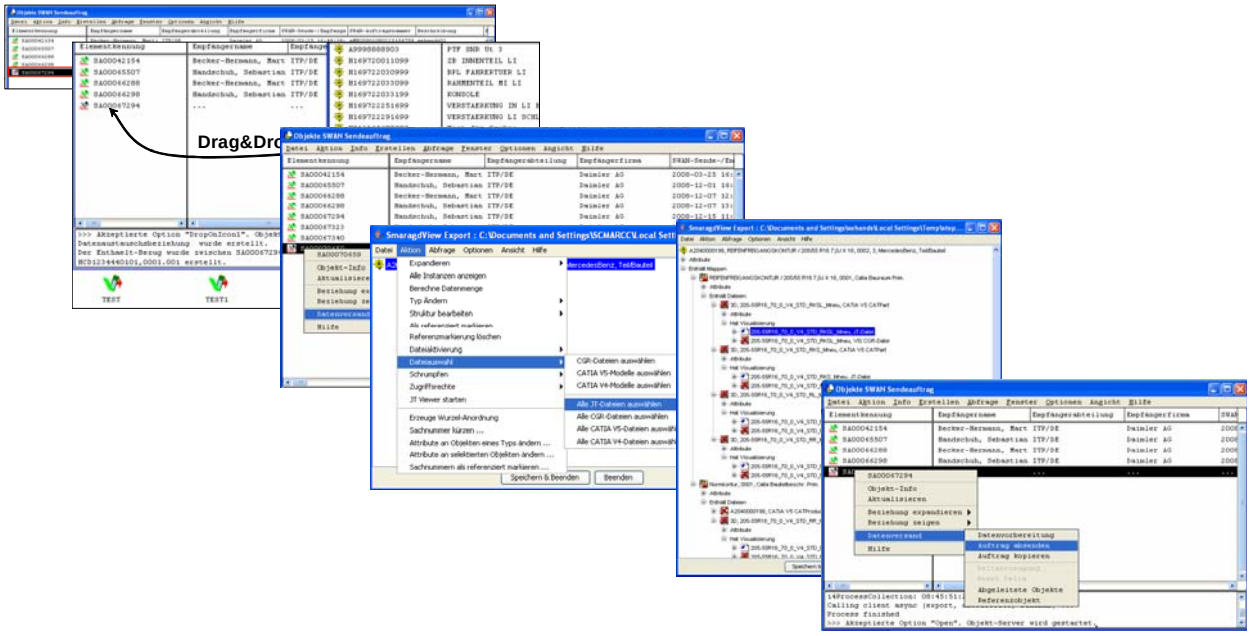

DAIMLER

#2: Visualisation of data with SAM-light and JT2GO Viewer

What is SAM?

SAM (STEP Assembly Manager) is a tool for the administration and handling of complex hierarchical assembly structures in the CAD environment of the supplier.

Why SAM?

Suppliers can import, process and export Smaragd assemblies in their CAD environment without additional PDM system.

What is SAM-light?

There are three components of SAM: PDM GUI, SAM-STEP-Interface and SAM-CATIA-functionality. SAM-light consists of GUI and Interface.

SAM Community

- Common project of DAIMLER, Renault and MAGNA Steyr Fahrzeugtechnik
- T-Systems and PDTec are development partners

DAIMLER

#2: Visualisation of data with SAM-light and JT2GO Viewer

Assembly structure management

- **import and export** of STEP AP214 CC6 files
- **display product structure** in Smaragd specific terminology and symbolic
- display and **edit Smaragd structure** data for parts and documents
- **merge** of sub assemblies
- **Create parts**/assembly components
- Processing **non-CATIA files**, e.g. MS Office files
- determination of **changed geometry** for STEP export
- **Compare product structures**

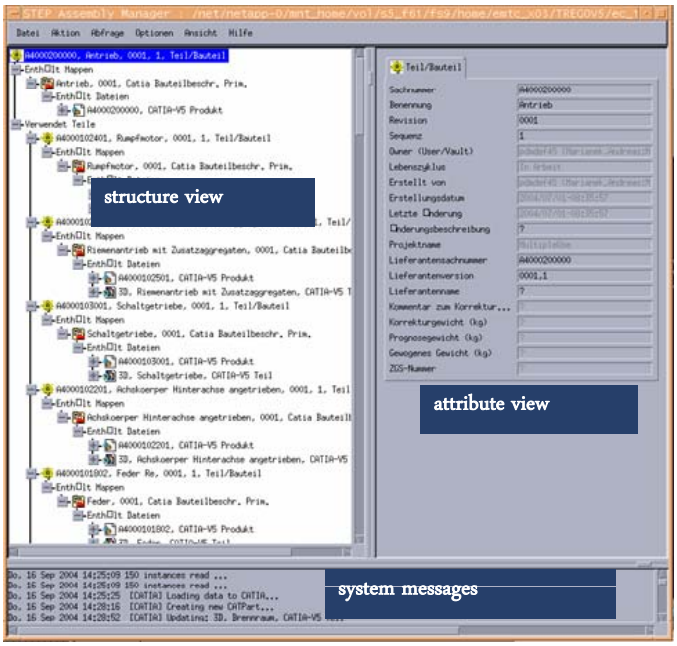

DAIMLER

#2: Visualisation of data with SAM-light and JT2GO Viewer

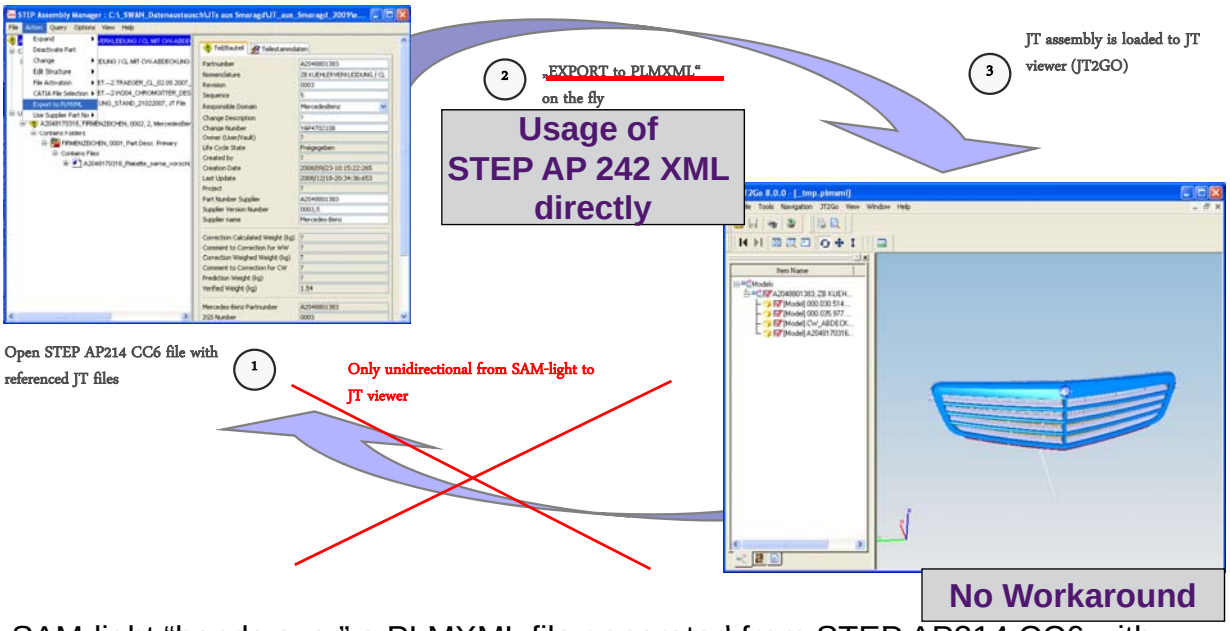

SAM-light “hands over” ~~a PLMXML file generated from STEP AP214 CC6~~ with referenced JT files to JT2GO or VisView (separate installation of JT viewer required).

DAIMLER

Questions from Mr. Ohtaka (2011-02-08)

Dear Mr.Martin,

Thank you for providing an useful information.
The followings are my initial comments;

1. No difference of STEP/JT usage in real-life body engineering processes and power train engineering processes?
Your scenario does not mention about body engineering processes vs. power train engineering processes. Does it mean that there is no difference of STEP/JT usage in those processes?

2. Distinction(or differenciation) of the use of STEP and JT
For what jobs JT is satisfactory and for what jobs STEP is indispensable
is not enough clear for me.

3. Expectation for STEP AP 242
The scenario does not clarify what are remaining issues. Daimler may expect
AP242 to resolve some of them. What are they? Removal of the use of PLMXML?

Thank you for your response in advance.
We may discuss these in the tomorrow's PPC meeting in Austria if
Mr.Holm succeeds to organize a teleconference.

Best Regards,
Akihiko Ohtaka

DAIMLER

1. No difference of STEP/JT usage in real-life body engineering processes and power train engineering processes?
Your scenario does not mention about body engineering processes vs. power train engineering processes.
Does it mean that there is no difference of STEP/JT usage in those processes?

Answer:

At Daimler we have the same CAD- and EDM-System for all Business Units and all processes (CATIA V5, Smaragd). So it is not necessary to make a difference in STEP/JT usage.

In detail there are some differences:

- More PMIs to handle in powertrain datasets
- Filesize and complexity of datasets (e.g. engine blocks)
- Usage of kinematical constraints are typical in body engineering

2. Distinction (or differenciation) of the use of STEP and JT
For what jobs JT is satisfactory and for what jobs STEP is indispensable
is not enough clear for me.

Answer:

Our goal is to establish JT in all our Downstream processes (e.g. Packaging, Visualisation). CAD-Systems only if really necessary (costs, User Interface, ...)

When we have to handle assemblies, kinematics, ... outside our EDM-Systems we will establish STEP.

So we will have a combination of STEP and JT in future very often.

3. Expectation for STEP AP 242
The scenario does not clarify what are remaining issues. Daimler may expect
AP242 to resolve some of them. What are they? Removal of the use of PLMXML?

Answer:

We have high efforts for data preparation when we use PLMXML outside „our EDM world". See example.

An ISO Standard is needed to ensure:

Ensure interoperability between different downstream applications

- Reduce costs of interface developments of CAD-, Viewing- and other CAx-Systems

- Protection of investments e.g. in tool landscape etc.

- Add further consolidated and interoperable functionalities such as kinematics etc.

DAIMLER

Why we don't prefer PLMXML in future.

Example: *JT for Supplier Integration (Suppl.2OEM)*

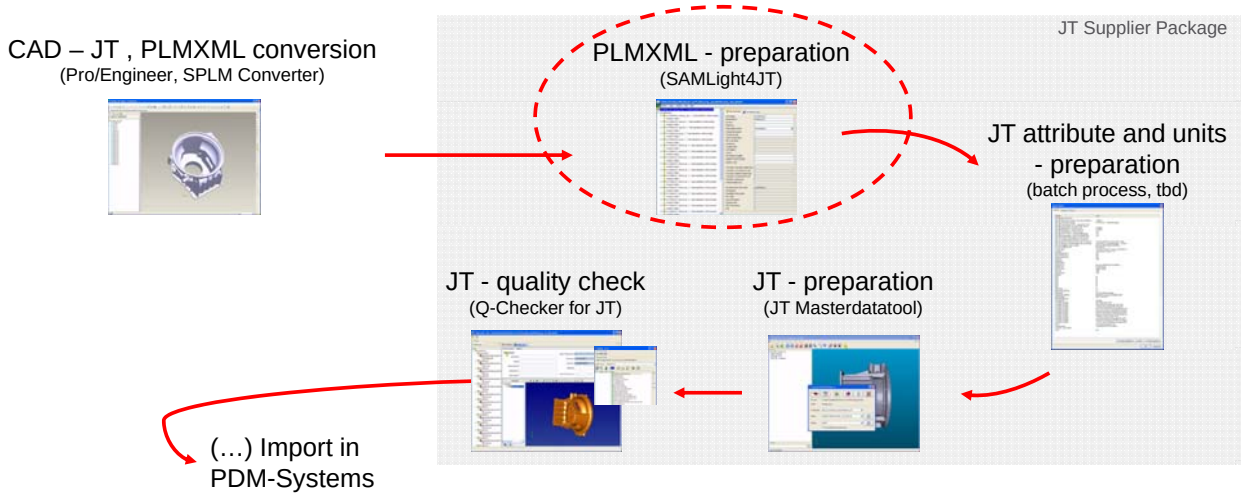

High efforts for data preparation needed e.g. for PLMXML Preparation.

DAIMLER

Why we don't prefer PLMXML in future.

Example: *JT for Supplier Integration (Suppl.2OEM)*

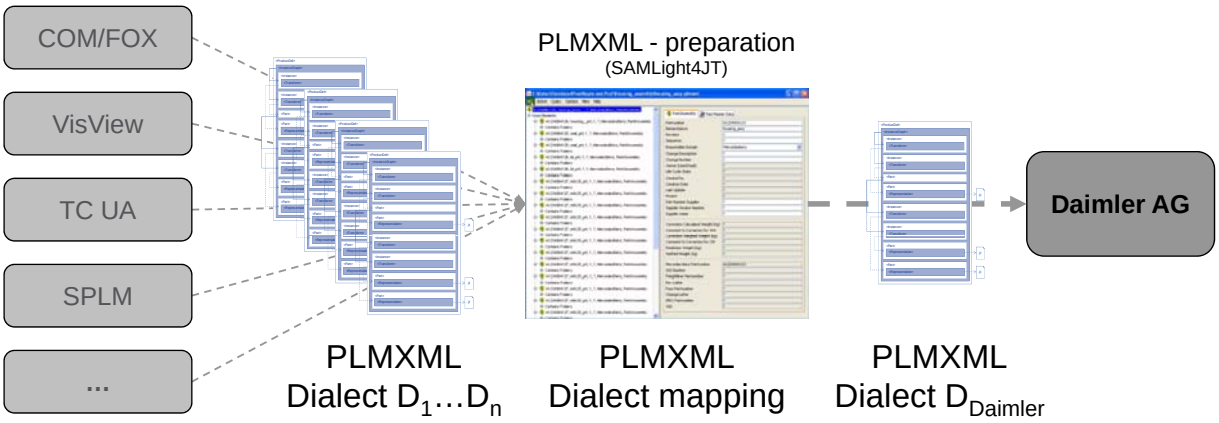

A dialect of PLM XML is defined as a PLMXML Schema-compliant combination of PLMXML elements and structures. Interoperability of different dialects within the heterogeneous system environment <u>is not guaranteed</u>.

DAIMLER

Conclusion STEP AP 242

An ISO Standard is needed to ensure:

- Ensure interoperability between different downstream applications
  - Reduce costs of interface developments of CAD-, Viewing- and other CAx-Systems
- Protection of investments e.g. in tool landscape etc.
- Add further consolidated and interoperable functionalities such as kinematics etc.

DAIMLER

Zusammenspiel der Formate

Native Formate
- CATIA
- CREO
- NX

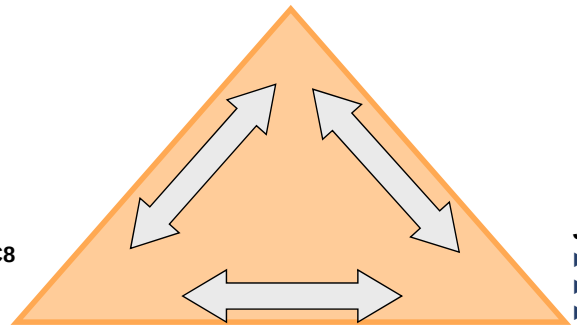

STEP
- Struktur CC6 + CC8
- Geometrie
- Drafting CC3

JT
- Tesselated Representation, LOD
- Boundary Representation
- Product Manufacturing Information

DAIMLER

Referenzprozesse

- Visualisierung
- DMU
- Design im Context
- 3D Master (zeichnungsfreier Gesamtprozess)
- Regelkreis Konstruktion / Berechnung
- Collaboratives Design OEM & Supplier
- Supply Chain Management
- Downstreamprozesse
  - Planung
  - Anlagenbau
  - Werkzeugbau
  - Steuerungstechnik

DAIMLER

Use Cases und Referenzprozesse

	21 Use Cases: JT for…																				
Referenzprozesse	Supplier Integration	Digital Factory Process Planning	Facility & -Robot Simulation	Material flow simulation	Factory DMU	Drawingless Manufacturing	High-end Visualization	Material Specification	Archiving	Bidding / Inquiry	DMU-Analysis	Finite Element Analysis (FEA/FEM)	Hybrid Design in Context	Multibody Simulation	Non-hybrid Design in Context	Tolerance Studies	Viewing	Simulation of flexible elements	Digital Factory Building Planning	Digital Factory Plant Development	Digital Fact. Bulk Material Planning
Visualisierung																					
DMU																					
Design im Context																					
3D Master (zeichnungsfreier Gesamtprozess)																					
Regelkreis Konstruktion / Berechnung																					
Collaboratives Design OEM & Supplier																					
Supply Chain Management																					
Planung																					
Anlagenbau																					
Werkzeugbau																					
Steuerungstechnik																					

AeroSpace and Defence
Industries Association of Europe

PDQR10-05-06

ASD SSG "CAD 3D Electrical Harness Interop" WG

Teleconf on the 14th of Januray 2011

Jean-Yves DELAUNAY
EADS - Airbus

Table

- Introduction – context
- Business requirements
- ASD SSG UCs for exchange / migr. of 3D Elec Harness Def. & Instal.
- LOTAR UC for LTA&R of Elec Harness Definition & Installation
- Preparation of other ASD SSG UCs (Elec schematics...)?
- Resulting table of SSG UCs with associat. criterias of operational level
- Review of the proposed 2011 ASD SSG project for Elec Harness Interop (preparation of new STEP modules for 3D Electrical Harness)
- Prep. of the ASD SSG – ProSTEP iViP telconf on the 18th of Jan 2011
- Potential extension of AP 242 ed2 for electrical harness and electrical schematics

ASD SSG PLM interoperability WG WBS for 2011

ASD SSG Nov. 2010

PLM interoperability WG

	PDM interoperability recommendation	**CAD 3D with PMI** interoperability recommendation Include 3D light visu / collaboration	**CAD 3D Composite design** interoperability recommendation	**CAD 3D Electrical Harness** interoperability recommendation
On going A&D Activities	ASD SSG AIA	SSG started AIA: ?	AIA PDES Inc LOTAR	SSG 2011 LOTAR 2011
SSG Priority	Pr. 1	Pr. 1	Pr. 2	Pr. 1
SSG WG	Yes (Start: 2009)	Yes (Start: 2009)		
ASD project				Planned for 2011
ASD SSG recommendation	V1: 2011	V1: 2011	V1: 2012	V1: 2011 draft

Creation of an ASD project for interoperability of **CAD 3D electrical systems**

ASD SSG Nov. 2010

Potential Members: Airbus, Eurocopter, Astrium, Cassidian, BAeS?, Labinal, Thales, Dassault-Aviation, (National defence governmental agencies, ...)

Objectives: prepare the ASD SSG recommendation for CAD 3D electrical Harness Interoperability

Planned 2011 budget: 80 KE - planned members fee: 10 to 15 KE for 2011

Dependancies: STEP AP 210, STEP AP 212, STEP AP 242, VDA VEC KBL, ...

Deliverables:

- Business cases, Use cases: consultation (simplified), visualization, migration, collaboration, exchange for reuse, LTA&R, ...
- State of the arts of standards
- Preliminary draft ASD SSG recommendation for Elec Harness interoperability
- Contribution to the White Paper for interoperability of CAD 3D Electrical Harness, for STEP AP 242 edition 2 (preparation of the ISO/TC 184/SC 4 NWI)
- Proof of concept for STEP modules for 3D elec. Harness
- Pilot of proactive CAD vendor

Next actions: teleconf to describe the scope and prepare the project specification proposal

Identification of Business requirements for Electrical Harness Interoperability

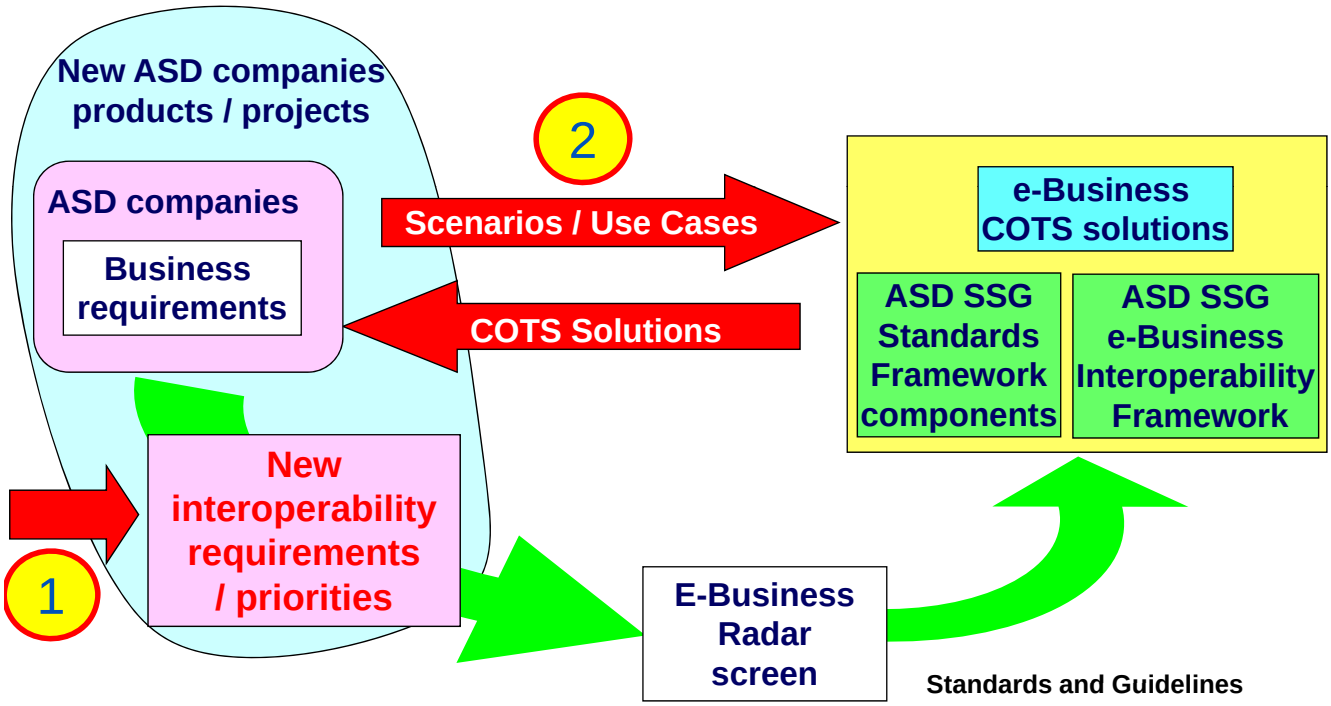

Monitoring of all e-Business standards
(anticipation of new needs)

Business requirements (Draft to be agreed)

- Interoperability for CAD 3D electrical Harness definition (explicit semantic of the electrical harness) and CAD 3D electrical installation based on open standards, for:
  - Exchange
  - Migration
  - Long Term Archiving
  - Visualization
  - Nota: level of connectivity to be detailed
- Out of scope
  - Parametric
  - 2D schematic (to be confirmed)

EADS priorities for 2011

ASD SSG Nov. 2010

- Technical
  - Overall interoperability framework (blips, radar screen, ...)
  - Technical Data Package message
  - STEP AP 242 project (edition , prep. of edition 2 extensions for start in 2012)
  - CAD 3D with PMI Interoperability
  - PDM Interoperability
  - LT Archiving and Retrieval of 3D digital product information
  - 3D light visualization / collaboration open format policy
  - CAD 3D electrical harness interoperability (Prep. AP 242 ed2 extension)
  - CAD 3D composite design interoperability
  - Systems Engineering interoperability
  - Standards roadmap for simulation
  - ILS standards overview & interoperability with Engineering product information

SSG monitoring of the maturity of standard(s) and link with the 5 years SSG vision

Composite & Elec. Harness interop. capabilities (2/2)

Use case name	Descript. status	ASD SSG priority	AIA priority	ASD SSG policy	ASD SSG radar	ASD pilot
CAD 3D Composite design exchange for downstream reuse	Avail.	P1		2012	yes	
CAD 3D Composite design migration	Avail.	P1		2012	yes	
CAD 3D Composite design visualization	Q2 2011	P1		2012	yes	
CAD 3D Composite design LTA&R	Q2 2011	P1		2012	yes	
CAD 3D Electrical Harness definition Exchange for down stream reuse	Avail.	P1		2011?	yes	
CAD 3D Electrical Harness definition Exchange for down stream reuse	Q22011	P1		2011?	yes	
CAD 3D Electrical Harness definition Migration	Avail.	P1		2011?	yes	
CAD 3D Electrical Harness definition visualization	2011	P1		2011?	yes	
CAD 3D Electrical Harness definition visualization	2011	P1		2011?	yes	
CAD 3D Electrical Harness definition LTA&R	2011	P1		2011?	yes	

LOTAR Draft list of LOTAR use cases (December 2010 LOTAR workshop)

									Harmonization		
Description	U-C Status	LOTAR family	LOTAR part	ISO information model	Rec. Practise status	COTS interface status	LOTAR pilot	Impl. Forum	AIA EMC	ASD SSG	
L-T Archiving and Retrieval of a design containing CAD 3D assembly with PMI "polyline presentation"	In prep.			STEP AP 242	Partial	Start Proto	2011				
L-T Archiving and Retrieval of a definition containing CAD 3D exact geometry with PMI and CAD 3D facetted information	draft	3D geometry		STEP AP 242	Partial	Start Proto	2011				
LT Archiving and Retrieval of CAD 3D electrical harness design	draft	Electric	P410?	STEP AP 242?	Partial		No				
LT Archiving and Retrieval of CAD 3D electrical harness installation with PMI and CAD 3D facetted information	draft	Electric									
LT Archiving and Retrieval of CAD 3D composite design	draft	Composite	P310?	STEP AP202-ed2 AP242		Start Proto	start 2011	Planned 2011			

Use case: L-T Archiving and Retrieval of CAD 3D electrical harness design

Use case description

L-T Archiving and Retrieval of CAD 3D electrical harness design

LOTAR

Name : L-T Archiving and Retrieval of CAD 3D electrical harness design

Description

- Need to archive CAD 3D electrical harness design models.

Example N°1: For Certification requirements and product liability

Example N°2: For support in operation

Scope of CAD information to be preserved (Essential information):

For the CAD 3D electrical harness design models:

- harness,
- branches,
- connections,
- nodes,
- connectors,
- protective coverings,
- labels, positioning markers.

- CAD Product structure with matrix positioning

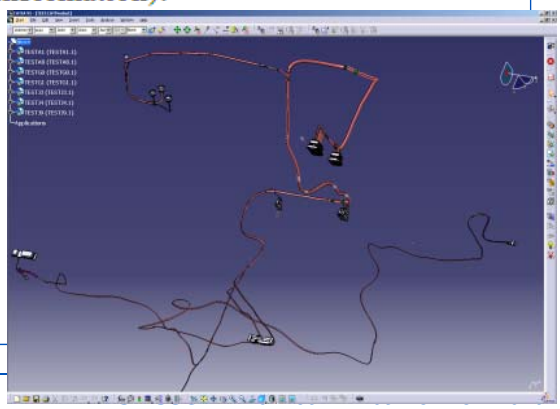

UC L-T Archiving and Retrieval of CAD 3D electrical harness installation with PMI and CAD 3D facetted information

Use case description

L-T Archiving and Retrieval of CAD 3D electrical harness installation with PMI and CAD 3D facetted information

LOTAR

Name : L-T Archiving and Retrieval of CAD 3D electrical harness installation with PMI and CAD 3D facetted information

Description

- Need to archive for long term and retrieve CAD 3D electrical harness installation information containing CAD 3D exact shapes with 3D PMI and CAD 3D facetted information (for context)
- The CAD 3D exact shape definition of the parts represented by the CAD 3D facetted information is archived according to other use cases, not detailed here. The CAD 3D facetted models are used to define the 3D context information; it contributes to understand the overall environment of the design. The description of the level of approximation of the 3D facetted geometry is out of scope of this generic use case.
- Examples: For certification requirements, for installation, for support in operation...

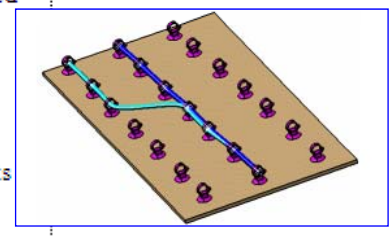

Scope of CAD information to be preserved:

- CAD assembly structure with assembly relationships and matrix positioning.
- CAD 3D electrical harness installation data exact shape with PMI information of the parts (definition)
  - fasteners,
  - supports,
  - bondings,
  - labels ...
- CAD 3D facetted information for the context: other structural or systems components, 3D electrical harness definition

Use case: Exchange of CAD 3D electrical harness definition

AeroSpace and Defence Industries Association of Europe

Use case description

Name – Exchange of 3D electrical harness definition

Description

Need to exchange CAD 3D electrical harness definition dossier for collaborative work with another actor working with another CAD systems.
Example N°1: Exchange between the manufacturer and a supplier;
Example N°2: Exchange between a supplier and his own suppliers
Scope of information: CAD 3D electrical harness information and product structure (with matrix positioning and instances) including:

- harness,
- branches,
- connections,
- nodes,
- connectors,
- protection.

Out of scope:

- Configuration management,
- The installation of the electrical harness,
- The functional definition (schematic representation).

Use case: Migration of CAD 3D electrical harness definition

AeroSpace and Defence Industries Association of Europe

Use case description

Name – Migration of CAD 3D electrical harness definition

Description

Need to migrate CAD 3D electrical harness definition from a CAD COTS tool to another one preserving all CAD entities necessary to re-use.
Example N°1: change of aircraft manufacturer CAD tool (obsolescence, ...)
Example N°2: merge an A&D company with another company having different CAD electrical harness applications and migration for a common CAD application
Scope of information: CAD 3D electrical harness definition information and product structure (with matrix positioning and instances) including:

- harness,
- branches,
- connections,
- nodes,
- connectors,
- protection.

Out of scope:

- Configuration management,
- The installation of the electrical harness,
- The functional definition (schematic representation).

State of the arts of standards Link with the ASD SSG Radar screen

- Status of standards (Radar screen)
  - STEP AP 212 : summary ready
  - VEC KBL : draft summary
- Related standards:
  - STEP AP 210 : summary ready
  - STEP AP 242 : summary ready
  - STEP AP 214 (Consistency STEP AP 214 / AP 212) : summary ready
  - JT ISO and JT spec : summary ready

Creation of an ASD project for interoperability of **CAD 3D electrical systems** (2/2)

Planned Members:

Airbus	: JY Delaunay
Eurocopter	: I. Durante
Astrium	: P. Soubiron
Cassidian	: A. Paffenholz
BAeS?	: interested in principle, expert to be nominated
Rolls-Royce?	:
Labinal	:
Thales	: B. Blancheteau (TBC)
Dassault-Aviation	: C. Guillermoux

ProSTEP iViP "Process chain car electric / AP 212 project")

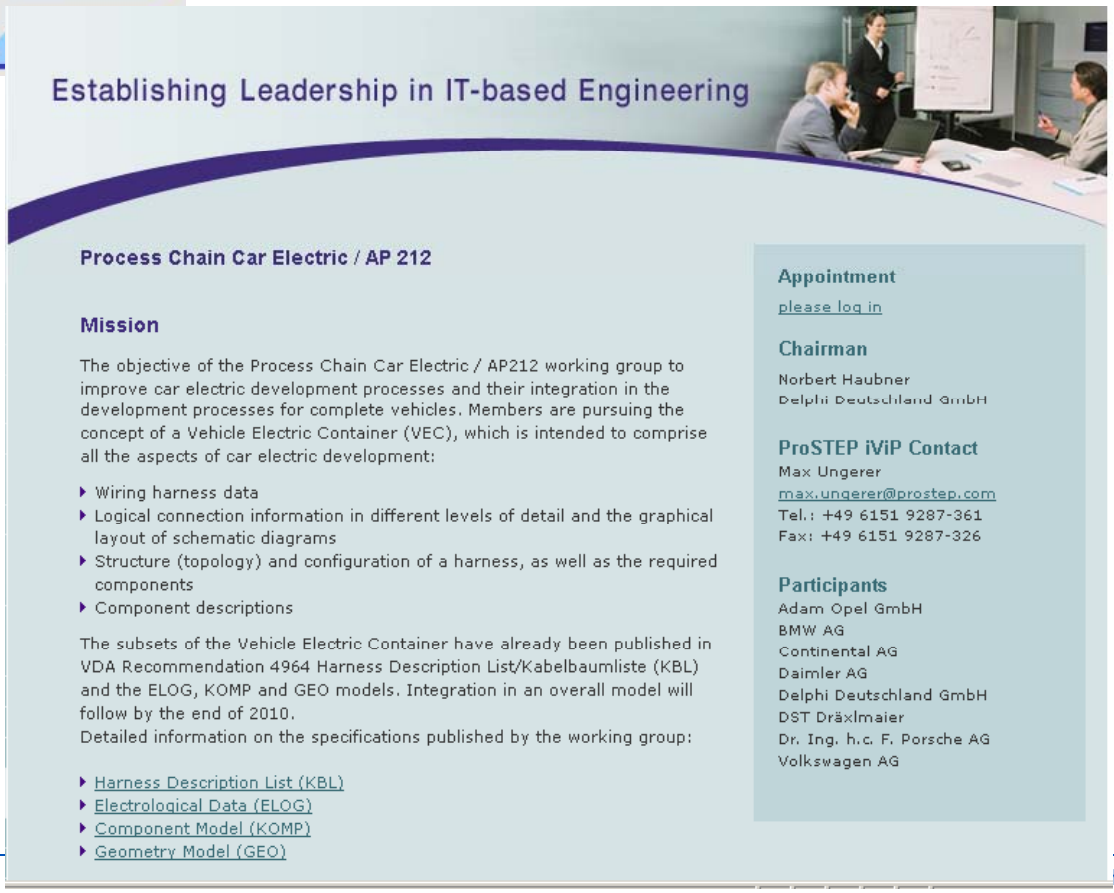

Establishing Leadership in IT-based Engineering

Process Chain Car Electric / AP 212

Mission

The objective of the Process Chain Car Electric / AP212 working group to improve car electric development processes and their integration in the development processes for complete vehicles. Members are pursuing the concept of a Vehicle Electric Container (VEC), which is intended to comprise all the aspects of car electric development:

- Wiring harness data
- Logical connection information in different levels of detail and the graphical layout of schematic diagrams
- Structure (topology) and configuration of a harness, as well as the required components
- Component descriptions

The subsets of the Vehicle Electric Container have already been published in VDA Recommendation 4964 Harness Description List/Kabelbaumliste (KBL) and the ELOG, KOMP and GEO models. Integration in an overall model will follow by the end of 2010.
Detailed information on the specifications published by the working group:

- Harness Description List (KBL)
- Electrological Data (ELOG)
- Component Model (KOMP)
- Geometry Model (GEO)

Appointment

please log in

Chairman

Norbert Haubner
Delphi Deutschland GmbH

ProSTEP iViP Contact

Max Ungerer
max.ungerer@prostep.com
Tel.: +49 6151 9287-361
Fax: +49 6151 9287-326

Participants

Adam Opel GmbH
BMW AG
Continental AG
Daimler AG
Delphi Deutschland GmbH
DST Dräxlmaier
Dr. Ing. h.c. F. Porsche AG
Volkswagen AG

VDA VEC V2 overview
(In final stage of development)

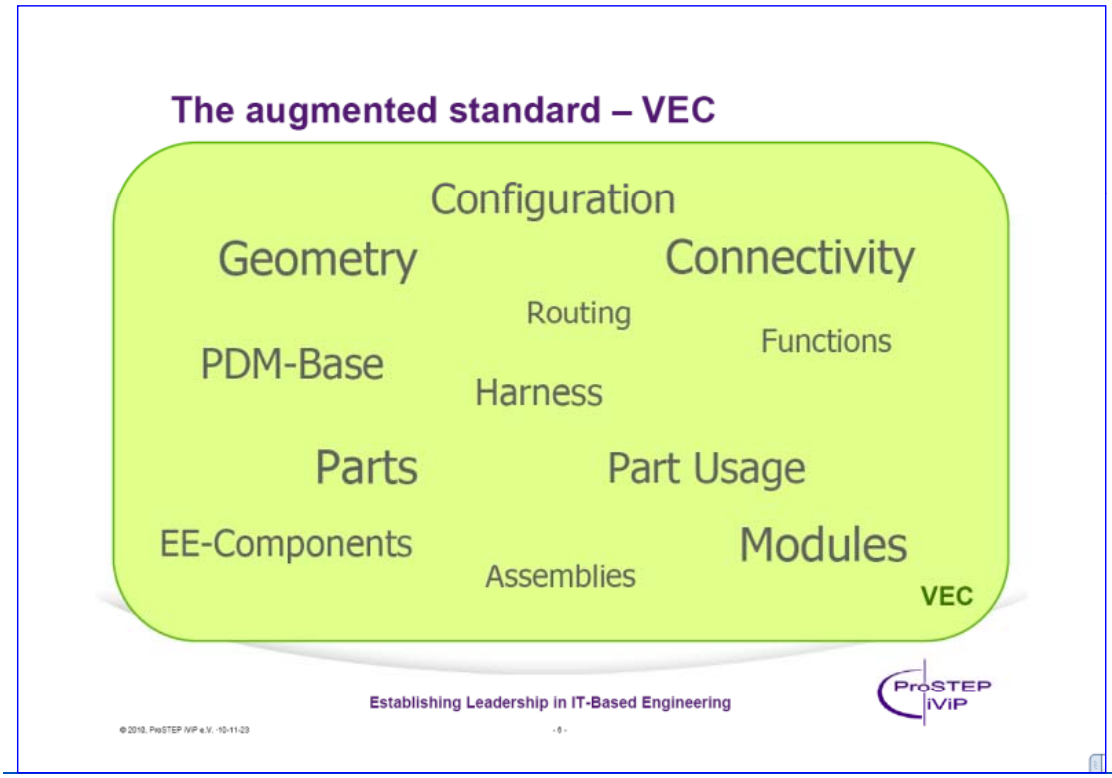

VDA VEC V2 scope

- 1 Kernel
  - 1.1 Parts and Documents
  - 1.2 PDM Information
  - 1.3 Usage Constraints
  - 1.4 Foundation Classes
  - 1.5 Variants Specifications
  - 1.6 Custom Properties
- 2 Basic Part Descriptions
  - 2.1 Wires
  - 2.2 Terminals
  - 2.3 Connectors
  - 2.4 Fixings and Wire Protections
  - 2.5 EE Components
  - 2.6 Contact System
- 3 Geometry
  - 3.1 Topology- and Topology Group Specification
  - 3.2 2D Geometry
  - 3.3 3D Geometry
  - 3.4 Placement and Dimensions
  - 3.5 Geometry and Variants
- 4 Connectivity
  - 4.1 Net Specification
  - 4.2 Connection Specific
  - 4.3 Wiring Specification
  - 4.4 Contacting Specification
  - 4.5 Mating Specification
  - 4.6 Connectivity and Variants
- 5 Complex Part Descriptions
  - 5.1 Assemblies, Modules and Harness Configurations
  - 5.2 PartUsages and PartOccurrences
  - 5.3 Roles
  - 5.4 Routing
  - 5.5 Wire Use
  - 5.6 Installation Instruction Reference
  - 5.7 Harness and Variants
- 6 XML-Representation
  - 6.1 XML-Root
  - 6.2 The Conformance Class concept

2011 VDA VEC V2 work plan

Results and Schedule VDA VEC Project

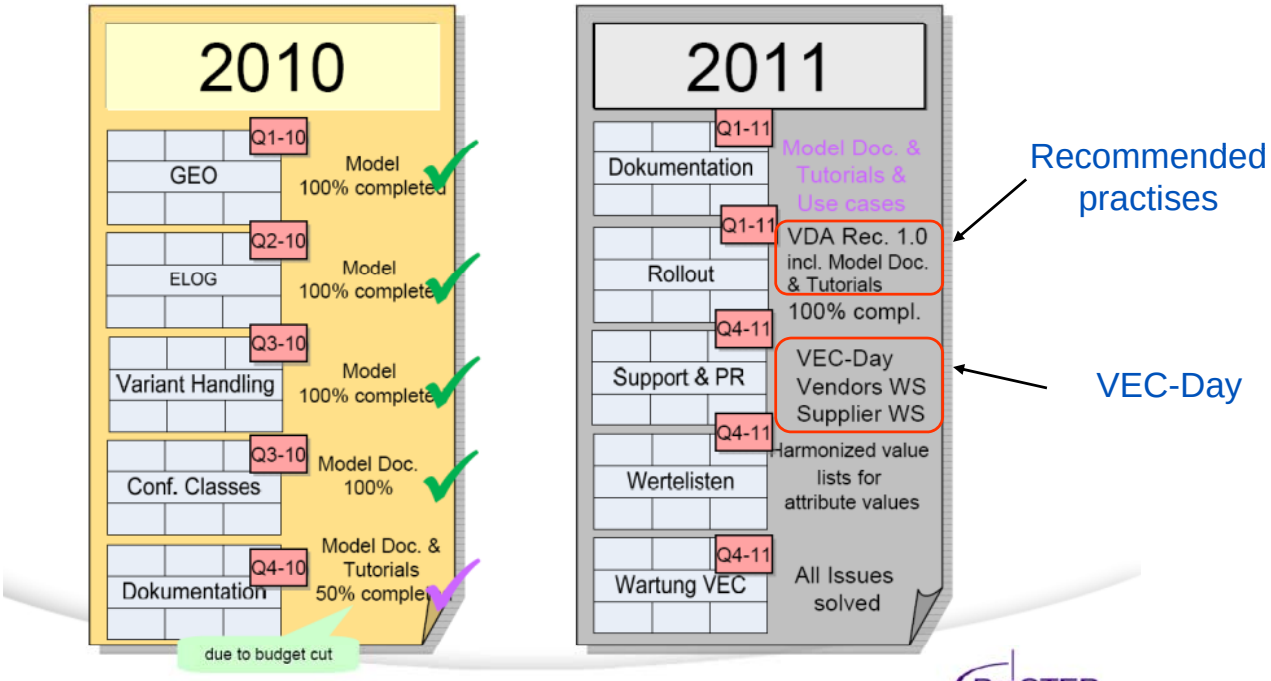

Establishing Leadership in IT-Based Engineering

Prep. of the ASD SSG – ProSTEP iViP telconf on the 18th of Jan 2011

- **Overview of ASD SSG (organization, objectives, methods) : 15'**
- **Overview of ProSTEP iViP (organization, objectives, methods) : 15'**
- **Overview of 2011 ASD SSG activities for PLM interoperability : 15'**
- **Status of joint ASD – ProSTEP iViP activities (STEP AP 242 , LOTAR, ...) : 15'**
- **Overview of other ProSTEP iViP projects for 2011 : 15'**
- **Next cooperations? : 10'**
  - Standardization projects: 3D electrical harness STEP modules
  - Coordination of Standards Recommended Practises
  - Support to Implementor Forums (CAD, PDM, 3D visu , …)
- **Summary – next actions : 5'**

Back up slides

The next step: VEC ("Vehicle Electric Container")

Relaunch of the model ("KBL reloaded")

- Consolidation of the models with the target of a unified and harmonized model supporting the whole car electric life cycle process (from Harness to the complete car)
  - advancement of the current data models
  - Harmonization of the different dialects
  - Consideration of the technologies
  - Handling of PDM and CM aspects
- ➔ **VEC** ("vehicle_electric_container")
- Superset of
  - KBL; ELOG; GEO; KOMP
- Valid Subsets will be defined by Conformance Classes

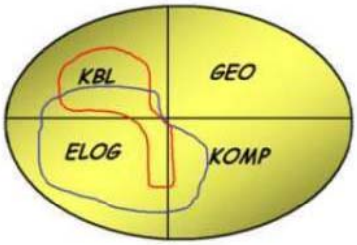

VDA Verband der Automobilindustrie

ProSTEP iViP

Data quality test method and criteria for GD&T data

20111-02-14, 01-23, ~~21a~~
'oshiaki ISHIKAWA

1 Purpose

To define quality requirements for tolerancing data, i.e. test method and criteria of low quality tolerancing data

2 Concept

2.1 Premise

Quality check of tolerancing data has to start with "Tolerancing classification",
because
product designer has clear quality requirements onto the specific region of parts,
how it is to be toleranced and such (acceptable) tolerance value is to be realized,
for realizing the functional specifications assigned on that specific region of parts, and
ISO and/or ANSI Draughting standards are so designed as to support such product designers' tolerancing requirements.

2.2 Two axis approach

Axis 1: Tolerance classification
Axis 2: Classification of Low quality tolerancing data

3 Tolerance classification -- Vertical axis of tables

3.1 Common for Dimensioning & Tolerances and Geometric Tolerances
3.2 Dimensioning and Tolerances
3.3 Geometric Tolerances

4 Classification of Low quality tolerancing data -- Horizontal axis of tables

A: Error tolerance definition
B: Inconsistent definition between tolerancing elements
C: Inconsistent tolerance value
D: Inconsistent tolerancing condition

5 Tables

Table 1 Common for Dimensioning & Tolerances and Geometric Tolerances
Table 2 Dimensioning and Tolerances
Table 3 Geometric Tolerancing

Annex A Cross reference from "New Geometric Dimensioning and Tolerancing Criteria" to "Data quality test method and criteria for GD&T data"

4 Classification of Low quality tolerancing data -- Horizontal axis of tables

4.1 A: Error tolerance definition

A.1: Tolerance classification error
A.2: Projection line/Leader line error
A.3: Target shape element error
A.4: Tolerancing text error
A.5: Tolerance symbol error
A.6: Dimension value error
A.7: Tolerance value error
A.8: Tolerancing condition error

4.2 B: Inconsistent definition between tolerancing elements

B.1: Target shape element is inconsistent with Tolerance classification
B.2: Tolerance symbol is inconsistent with
B.2.1: Tolerance classification
B.2.2: Target shape element
B.3: Inconsistent tolerancing condition
B.3.1: Tolerancing condition is inconsistent with Tolerance classification
B.3.2: Tolerancing condition is inconsistent with Target shape

4.3 C: Inconsistent tolerance value

C.1: Tolerance value is inconsistent with Tolerance classification
C.2: Tolerance value is inconsistent with Target shape element
C.3: Tolerance value is inconsistent with Shape data

Table 1 Common for Dimensioning & Tolerances and Geometric Tolerances (1/2)

Classification of Low quality tolerancing data / Tolerance classification and Low quality tolerancing data	A: Error tolerance definition								B: Inconsistent definition between tolerancing elements						C: Inconsistent tolerance value				Item No. of "New GD & T Criteria"
									B.1: Target shape element		B.2: Tolerance symbol is inconsistent with		B.3 Tolerancing condition		Tolerance value is inconsistent with				
									Tolerance classification		Tolerance class.	Target shape element	Tolerance class.	Target shape element	Tolerance class.	Target shape element	C.3 Shape data		
	Tolerance classification error	Extension line/Leader line error	Target shape element error	Tolerancing text error	Tolerance symbol error	Dimension value error	Tolerance value error	Tolerancing condition error	Target shape element is inconsistent with Tolerance classification	Relationships of target shape elements are inconsistent with Tolerance class.	Symbol of tolerancing target element is inconsistent with Tolerance classification	Symbol of tolerancing target element is inconsistent with Target shape element	Tolerancing condition is inconsistent with Tolerance classification	Tolerancing condition is inconsistent with Tolerance target element	Tolerance value is inconsistent with Tolerance classification	Tolerancing condition is inconsistent with Tolerance target element	Tolerance value is inconsistent with Shape size value	Tolerance value is inconsistent with Shape definition accuracy	
Tolerance classification																			
Low quality tolerancing data	A.1	A2	A.3	A.4	A.5	A.6	A.7	A.8	B.1.1	B.1.2	B.2.1	B.2.2	B.3.1	B.3.2	C.1	C.2	C.3.1	C.3.2	
1 Common for Dimensioning & Tolerances and Geometric Tolerances																			
1.1 Tolerance classification																			
-1 Non-standard tolerance classification is assigned	×																		
1.2 Lines for Dimensioning & Tolerances and Geometric Tolerances (Relationship between GD&T and Target shape element)																			
-1 No extension line is defined Extension line/Leader line points no shape element (Fake dimension)		×	(×)																3, 7, 9
-2 Leader line phont is error (Presentation error)		×																	5a, 11a
1.3 Target shape element																			
-1 Target shape elements are not correct for Tolerance classification									××	××									16bhi
-2 Target shape element is error			×																1, 2
-3 Tolerancing target element is not measurable									××	××									
1.4 Text																			
-1 No dimension/tolerancing text is defined				×															4
1.4.1 Dimension value																			
-1 Dimension value is not correct for Target shape element						×													17

Table 1 Common for Dimensioning & Tolerances and Geometric Tolerances (2/2)

Classification of Low quality tolerancing data / Tolerance classification and Low quality tolerancing data	A: Error tolerance definition								B: Inconsistent definition between tolerancing elements						C: Inconsistent tolerance value				Item No. of "New GD & T Criteria"
									B.1: Target shape element		B.2: Tolerance symbol is inconsistent with		B.3 Tolerancing condition		Tolerance value is inconsistent with				
									Tolerance classification		Tolerance class.	Target shape element	Tolerance class.	Target shape element	Tolerance class.	Target shape element	C.3 Shape data		
	Tolerance classification error	Extension line/Leader line error	Target shape element error	Tolerancing text error	Tolerance symbol error	Dimension value error	Tolerance value error	Tolerancing condition error	Target shape element is inconsistent with Tolerance classification	Relationships of target shape elements are inconsistent with Tolerance class.	Symbol of tolerancing target element is inconsistent with Tolerance classification	Symbol of tolerancing target element is inconsistent with Target shape element	Tolerancing condition is inconsistent with Tolerance classification	Tolerancing condition is inconsistent with Tolerance target element	Tolerance value is inconsistent with Tolerance classification	Tolerancing condition is inconsistent with Tolerance target element	Tolerance value is inconsistent with Shape size value	Tolerance value is inconsistent with Shape definition accuracy	
Tolerance classification																			
Low quality tolerancing data	A.1	A2	A.3	A.4	A.5	A.6	A.7	A.8	B.1.1	B.1.2	B.2.1	B.2.2	B.3.1	B.3.2	C.1	C.2	C.3.1	C.3.2	
1 Common for Dimensioning & Tolerances and Geometric Tolerances (Continued)																			
1.4 Text (Continued)																			
1.4.2 Tolerance value																			
-1 No tolerance value is defined							×												4, 20d
-2 Tolerance value is zero							×												27
-3 Tolerance value is not correct for Target shape element															××	××			
-4 Tolerance value is larger than Shape size value																	×		18j
-5 Shape definition accuracy is larger than Tolerance value (to be applied every shape elements not only explicitly Toleranced but also General toleranced)																		×	
1.11 Shape element, defined plural dimension/tolerancing																			
-1 Shape element has plural tolerance definitions, but with conflicting tolerance values							×												32e

Table 2 Dimensioning and Tolerances (1/3)

Classification of Low quality tolerancing data / Tolerance classification and Low quality tolerancing data	A: Error tolerance definition								B: Inconsistent definition between tolerancing elements						C: Inconsistent tolerance value				Item No. of "New GD & T Criteria"
									B.1: Target shape element		B.2: Tolerance symbol is inconsistent with		B.3 Tolerancing condition		Tolerance value is inconsistent with				
									Tolerance classification		Tolerance class.	Target shape element	Tolerance class.	Target shape element	Tolerance class.	Target shape element	C.3 Shape data		
	Tolerance classification error	Extension line/Leader line error	Target shape element error	Tolerancing text error	Tolerance symbol error	Dimension value error	Tolerance value error	Tolerancing condition error	Target shape element is inconsistent with Tolerance classification	Relationships of target shape elements are inconsistent with Tolerance class.	Symbol of tolerancing target element is inconsistent with Tolerance classification	Symbol of tolerancing target element is inconsistent with Target shape element	Tolerancing condition is inconsistent with Tolerance classification	Tolerancing condition is inconsistent with Tolerance target element	Tolerance value is inconsistent with Tolerance classification	Tolerancing condition is inconsistent with Tolerance target element	Tolerance value is inconsistent with Shape size value	Tolerance value is inconsistent with Shape definition accuracy	
Low quality tolerancing data	A.1	A2	A.3	A.4	A.5	A.6	A.7	A.8	B.1.1	B.1.2	B.2.1	B.2.2	B.3.1	B.3.2	C.1	C.2	C.3.1	C.3.2	
2 Dimensioning and Tolerances (ISO 129-1)																			
2.1.1 Symbol (7.1)																			
-1 No or non-standard tolerance symbol is assigned					×														6bceih, 8lp, 13bch
-2 Tolerance symbol is not correct for Target shape element											××	××							16cf
2.2 Linear dimension (4 - 5)																			
2.2.1 Distance between Lines or Planes																			
-1 Tolerancing target element is not measurable									××	××									
-2 Tolerancing target elements are not parallel segment nor plane									××	××									
-3 Tolerance symbol is not parallel segment nor plane											××	××							
-4 Tolerance value is not Distance															××	××			
2.2.2 Diameter/Radius																			
-1 Tolerancing target element is not measurable									××	××									
-2 Tolerancing target element is not circle nor cylinder									××	××									
-3 Tolerance symbol is not "R" nor "D"											××	××							
-4 Tolerance symbol "R" nor "D" is not consistent with Tolerance value												××							
-5 Tolerance value is not Diameter/Radius															××	××			

Table 2 Dimensioning and Tolerances (2/3)

Classification of Low quality tolerancing data / Tolerance classification and Low quality tolerancing data	A: Error tolerance definition								B: Inconsistent definition between tolerancing elements						C: Inconsistent tolerance value				Item No. of "New GD & T Criteria"
									B.1: Target shape element		B.2: Tolerance symbol is inconsistent with		B.3 Tolerancing condition		Tolerance value is inconsistent with				
									Tolerance classification		Tolerance class.	Target shape element	Tolerance class.	Target shape element	Tolerance class.	Target shape element	C.3 Shape data		
	Tolerance classification error	Extension line/Leader line error	Target shape element error	Tolerancing text error	Tolerance symbol error	Dimension value error	Tolerance value error	Tolerancing condition error	Target shape element is inconsistent with Tolerance classification	Relationships of target shape elements are inconsistent with Tolerance class.	Symbol of tolerancing target element is inconsistent with Tolerance classification	Symbol of tolerancing target element is inconsistent with Target shape element	Tolerancing condition is inconsistent with Tolerance classification	Tolerancing condition is inconsistent with Tolerance target element	Tolerance value is inconsistent with Tolerance classification	Tolerancing condition is inconsistent with Tolerance target element	Tolerance value is inconsistent with Shape size value	Tolerance value is inconsistent with Shape definition accuracy	
Tolerance classification / Low quality tolerancing data	A.1	A2	A.3	A.4	A.5	A.6	A.7	A.8	B.1.1	B.1.2	B.2.1	B.2.2	B.3.1	B.3.2	C.1	C.2	C.3.1	C.3.2	
2 Dimensioning and Tolerances (Continued)																			
2.3 Diameter/Radius dimension (7.1 - 7.4)																			
-1 Tolerancing target element is not measurable									××	××									
-2 Tolerancing target element is not diameter/radius of circle, cylinder, cone, sphere nor surface									××	××									
-3 Tolerance symbol is not diameter/radius of circle, cylinder, cone, sphere nor surface											××	××							
-4 Tolerance symbol "R" nor "D" is not consistent with Tolerance value												××							
-5 Tolerance value is not Diameter/Radius															××	××			
2.4 Arcs, chords and angles (7.5)																			
2.4.1 Arc length																			
-1 Tolerancing target element is not measurable									××	××									
-2 Tolerancing target element is not arc of circle, cylinder, cone, sphere nor surface									××	××									
-3 Tolerance symbol is not arc of circle, cylinder, cone, sphere nor surface											××	××							
-4 Tolerance value is not Arc length															××	××			
2.4.2 Chord length																			
-1 Tolerancing target element is not measurable									××	××									
-2 Tolerancing target element is not chord of circle nor cylinder									××	××									
-3 Tolerance symbol is not chord of circle nor cylinder											××	××							
-4 Tolerance value is not Chord length															××	××			

Table 2 Dimensioning and Tolerances (3/3)

Classification of Low quality tolerancing data / Tolerance classification and Low quality tolerancing data	A: Error tolerance definition								B: Inconsistent definition between tolerancing elements				D: Inconsistent tolerancing condition		C: Inconsistent tolerance value				Item No. of "New GD & T Criteria"
									B.1: Target shape element		B.2: Tolerance symbol is inconsistent with		Tolerancing condition is inconsistent with		Tolerance value is inconsistent with				
									Tolerance classification		Tolerance class.	Target shape element	Tolerance class.	Target shape element	Toleranc e class.	Target shape element	C.3 Shape data		
	Tolerance classification error	Extension line/Leader line error	Target shape element error	Tolerancing text error	Tolerance symbol error	Dimension value error	Tolerance value error	Tolerancing condition error	Target shape element is inconsistent with Tolerance classification	Relationships of target shape elements are inconsistent with Tolerance class.	Symbol of tolerancing target element is inconsistent with Tolerance classification	Symbol of tolerancing target element is inconsistent with Target shape element	Tolerancing condition is inconsistent with Tolerance classification	Tolerancing condition is inconsistent with Tolerance target element	Tolerance value is inconsistent with Tolerance classification	Tolerancing condition is inconsistent with Tolerance target element	Tolerance value is inconsistent with Shape size value	Tolerance value is inconsistent with Shape definition accuracy	
Tolerance classification																			
Low quality tolerancing data	A.1	A2	A.3	A.4	A.5	A.6	A.7	A.8	B.1.1	B.1.2	B.2.1	B.2.2	D.1	D.2	C.1	C.2	C.3.1	C.3.2	
2 Dimensioning and Tolerances (Continued)																			
2.4 Arcs, chords and angles (7.5) (Continued)																			
2.4.3 Angular dimension																			
-1 Tolerancing target element is not measurable									××	××									
-2 Tolerancing target element is not angle of circle, cylinder, cone, sphere nor surface									××	××									
-3 Tolerance symbol is not angle of circle, cylinder, cone, sphere nor surface											××	××							
-4 Tolerance value is not Angle															××	××			

Table 3 Geometric Tolerances (1/4)

Classification of Low quality tolerancing data / Tolerance classification and Low quality tolerancing data		A: Error tolerance definition								B: Inconsistent definition between tolerancing elements						C: Inconsistent tolerance value				Item No. of "New GD & T Criteria"
										B.1: Target shape element		B.2: Tolerance symbol is inconsistent with		B.3 Tolerancing condition		Tolerance value is inconsistent with				
										Tolerance classification		Tolerance class.	Target shape element	Tolerance class.	Target shape element	Tolerance class.	Target shape element	C.3 Shape data		
	Tolerance classification	Tolerance classification error	Extension line/Leader line error	Target shape element error	Tolerancing text error	Tolerance symbol error	Dimension value error	Tolerance value error	Tolerancing condition error	Target shape element is inconsistent with Tolerance classification	Relationships of target shape elements are inconsistent with Tolerance class.	Symbol of tolerancing target element is inconsistent with Tolerance classification	Symbol of tolerancing target element is inconsistent with Target shape element	Tolerancing condition is inconsistent with Tolerance classification	Tolerancing condition is inconsistent with Tolerance target element	Tolerance value is inconsistent with Tolerance classification	Tolerancing condition is inconsistent with Tolerance target element	Tolerance value is inconsistent with Shape size value	Tolerance value is inconsistent with Shape definition accuracy	
	Low quality tolerancing data	A.1	A2	A.3	A.4	A.5	A.6	A.7	A.8	B.1.1	B.1.2	B.2.1	B.2.2	B.3.1	B.3.2	C.1	C.2	C.3.1	C.3.2	
3	Geometric Tolerancing (ISO 1101: 2004)																			
3.1	Datum & Datum reference(s) (9)																			
3.1.1	Datum																			
-1	Datum is not referenced by any geometric tolerances	×		×					×	×	×			×	×					10
-2	Datum label error (unacceptable character is used)				×															12c, 31k
-3	The same label is used by more than one datum target				×				×	×	×			×	×					11b
3.1.2	Datum reference(s)																			
-1	Datum reference is not defined			×					×	×	×			×	×					25e
-2	Datum references are duplicating			×					×	×	×			×	×					23
-3	Inappropriate datum is referenced			×					×	×	×			×	×					26b
-4	Referenced datum is not defined in model	×		×					×	×	×			×	×					24c, 30
3.2	Theoretically exact dimension (TED) (11)																			
-1	Theoretically exact dimensions (TED) is toleranced (Basic dimension is toleranced)	×		×			×	×		×	×			×	×					8k, 19k
3.3	Symbol for Geometric tolerance (5)																			
3.3.1	Symbol for Geometric characteristics (Table1)																			
-1	No or non-standard geometric tolerance symbol is assigned			×		×						××	××							
-2	Tolerance symbol is not correct for Target shape element			×		×						××	××							21a

Table 3 Geometric Tolerances (2/4)

Classification of Low quality tolerancing data / Tolerance classification and Low quality tolerancing data	A: Error tolerance definition								B: Inconsistent definition between tolerancing elements						C: Inconsistent tolerance value				Item No. of "New GD & T Criteria"
									B.1: Target shape element		B.2: Tolerance symbol is inconsistent with		B.3 Tolerancing condition		Tolerance value is inconsistent with				
									Tolerance classification		Tolerance class.	Target shape element	Tolerance class.	Target shape element	Tolerance class.	Target shape element	C.3 Shape data		
	Tolerance classification error	Extension line/Leader line error	Target shape element error	Tolerancing text error	Tolerance symbol error	Dimension value error	Tolerance value error	Tolerancing condition error	Target shape element is inconsistent with Tolerance classification	Relationships of target shape elements are inconsistent with Tolerance class.	Symbol of tolerancing target element is inconsistent with Tolerance classification	Symbol of tolerancing target element is inconsistent with Target shape element	Tolerancing condition is inconsistent with Tolerance classification	Tolerancing condition is inconsistent with Tolerance target element	Tolerance value is inconsistent with Tolerance classification	Tolerancing condition is inconsistent with Tolerance target element	Tolerance value is inconsistent with Shape size value	Tolerance value is inconsistent with Shape definition accuracy	
Tolerance classification / Low quality tolerancing data	A.1	A2	A.3	A.4	A.5	A.6	A.7	A.8	B.1.1	B.1.2	B.2.1	B.2.2	B.3.1	B.3.2	C.1	C.2	C.3.1	C.3.2	
3 Geometric Tolerancing (ISO 1101: 2004) (Continued)																			
3.3 Symbol for Geometric tolerance (5) (Continued)																			
3.3.2 Additional symbols (Table 2)																			
-1 No or non-standard tolerance symbol is assigned			×		×			×			××	××	××	××					
-2 Tolerance symbol is not correct for Target shape element			×		×			×			××	××	××	××					22gi
3.4 Tolerancing condition																			
3.4.1 Tolerance zone(s) (8)																			
-1 Tolerance zone is not correct for Target shape element			×					×	××	××	××	××	××	××					29
3.4.2 Restrictive specification(s) (12)																			
			×					×	××	××	××	××	××	××					
3.4.3 Projected tolerance zone (13)																			
			×					×	××	××	××	××	××	××					
3.4.4 Maximum material condition (14)																			
-1 Material condition is not correct for Target shape element			×					×	××	××	××	××	××	××					28f

Table 3 Geometric Tolerances (3/4)

Classification of Low quality tolerancing data / Tolerance classification and Low quality tolerancing data	A: Error tolerance definition								B: Inconsistent definition between tolerancing elements						C: Inconsistent tolerance value				Item No. of "New GD & T Criteria"
									B.1: Target shape element		B.2: Tolerance symbol is inconsistent with		B.3 Tolerancing condition		Tolerance value is inconsistent with				
									Tolerance classification		Tolerance class.	Target shape element	Tolerance class.	Target shape element	Tolerance class.	Target shape element	C.3 Shape data		
	Tolerance classification error	Extension line/Leader line error	Target shape element error	Tolerancing text error	Tolerance symbol error	Dimension value error	Tolerance value error	Tolerancing condition error	Target shape element is inconsistent with Tolerance classification	Relationships of target shape elements are inconsistent with Tolerance class.	Symbol of tolerancing target element is inconsistent with Tolerance classification	Symbol of tolerancing target element is inconsistent with Target shape element	Tolerancing condition is inconsistent with Tolerance classification	Tolerancing condition is inconsistent with Tolerance target element	Tolerance value is inconsistent with Tolerance classification	Tolerancing condition is inconsistent with Tolerance target element	Tolerance value is inconsistent with Shape size value	Tolerance value is inconsistent with Shape definition accuracy	
Tolerance classification																			
Low quality tolerancing data	A.1	A2	A.3	A.4	A.5	A.6	A.7	A.8	B.1.1	B.1.2	B.2.1	B.2.2	B.3.1	B.3.2	C.1	C.2	C.3.1	C.3.2	
3																			
3.5 Single features																			
3.5.1 Form tolerances																			
3.5.1.1 Straightness																			
3.5.1.2 Flatness																			
3.5.1.3 Circularity																			
3.5.1.4 Cylindricity																			
3.6 Single or related features																			
3.6.1 Form tolerances																			
3.6.1.1 Profile of any line																			
3.6.1.2 Profile of any surface																			

Table 3 Geometric Tolerances (4/4)

Classification of Low quality tolerancing data / Tolerance classification and Low quality tolerancing data		A: Error tolerance definition								B: Inconsistent definition between tolerancing elements						C: Inconsistent tolerance value				Item No. of "New GD & T Criteria"
		Tolerance classification error	Extension line/Leader line error	Target shape element error	Tolerancing text error	Tolerance symbol error	Dimension value error	Tolerance value error	Tolerancing condition error	B.1: Target shape element		B.2: Tolerance symbol is inconsistent with		B.3 Tolerancing condition		Tolerance value is inconsistent with				
										Tolerance classification		Tolerance class.	Target shape element	Tolerance class.	Target shape element	Tolerance class.	Target shape element	C.3 Shape data		
										Target shape element is inconsistent with Tolerance classification	Relationships of target shape elements are inconsistent with Tolerance class.	Symbol of tolerancing target element is inconsistent with Tolerance classification	Symbol of tolerancing target element is inconsistent with Target shape element	Tolerancing condition is inconsistent with Tolerance classification	Tolerancing condition is inconsistent with Tolerance target element	Tolerance value is inconsistent with Tolerance classification	Tolerancing condition is inconsistent with Tolerance target element	Tolerance value is inconsistent with Shape size value	Tolerance value is inconsistent with Shape definition accuracy	
	Tolerance classification																			
	Low quality tolerancing data	A.1	A2	A.3	A.4	A.5	A.6	A.7	A.8	B.1.1	B.1.2	B.2.1	B.2.2	B.3.1	B.3.2	C.1	C.2	C.3.1	C.3.2	
3.7	Related features																			
3.7.1	Orientation tolerances																			
3.7.1.1	Parallelism																			
3.7.1.2	Perpendicularity Flatness																			
3.7.1.3	Angularity																			
3.7.2	Location tolerances																			
3.7.2.1	Position																			
3.7.2.2	Concentricity																			
3.7.2.3	Symmetry																			
3.7.3	Run-out tolerances																			
3.7.3.1	Circular run-out																			
3.7.3.2	Total run-out																			

Annex A

Cross reference

from "New Geometric Dimensioning and Tolerancing Criteria"

to "Data quality test method and criteria for GD&T data"

20111-01--23,~~21~~

Yoshiaki ISHIKAWA

"New Geometric Dimensioning and Tolerancing Criteria" in PDQR10-04-07			"Data quality test method and criteria for GD&T data"		
Item No. & Title	Sub Item No. in the Figure of PPT data		Item No.	Low quality tolerancing data	Comment
1. Discontinuous All-Around Geometry	1		1.3-2	Target shape element is error	~~Shape data quality~~
2. Implicit All-Around Specification	2		1.3-2	Target shape element is error	~~Shape data quality~~
3. Unassociated Annotation	3		1.2-1	Projection line/Leader line points no shape element	
4. Missing Annotation Graphics	4		1.4-1	No dimension/tolerancing text is defined	
			1.4.2-1	No tolerance value is defined	
5. Inappropriate Leader Line Type	5a		1.2-2	Leader line phont is error (Presentation error)	
6. Implicit Annotation Pattern	6bceih		2.1.1-1	No or non-standard tolerance symbol is assigned	
7. Implicit Annotation Pattern	7		1.2-1	No projection line is defined Projection line/Leader line points no shape element (Fake dimension)	
8. Inconsistent Annotation Pattern	8k		3.2-1	Theoretically exact dimensions (TED) is toleranced (Basic dimension is toleranced)	
	8lp		2.1.1-1	No or non-standard tolerance symbol is assigned	
9. Orphan Datum	9		1.2-1	No projection line is defined Projection line/Leader line points no shape element (Fake dimension)	
10. Extraneous Datum	10		3.1.1-1	Datum is not referenced by any geometric	
11. Duplicate Datum Targets	11a		1.2-2	Leader line phont is error (Presentation error)	
	11b		3.1.1-3	The same label is used by more than one datum target	
12. Unacceptable Datum Target Label	12c		3.1.1-2	Datum label error (unacceptable character is used)	
13. Inappropriate Toleranced Dimension	13ag		???		
	13bh		2.1.1-1	No or non-standard tolerance symbol is assigned	
14. Inappropriate Counter bore Symbol	14l		???		
15. Inappropriate Dimension Origin	15no		???		
16. Incorrect Dimension Geometry Type Linear dimension references curved geometry	16bhi		1.3-1	Tolerancing target elements are not correct for Tolerance classification	
Radial or diameter dimension references planar or spherical geometry	16cf		2.1.1-2	Tolerance symbol is not correct for Target shape element	
Spherical dimension references non-spherical geometry	16p		1.4.1-2	Tolerance symbol is not correct for Target shape element	
17. Fake Dimension	17		1.4.1-1	Dimension value is not correct for Target shape element	
18. Unrealistic Dimension Tolerance	18j		1.4.2-4	Tolerance value is larger than Shape size value	
19. Toleranced Basic Dimension	19k		3.2-1	Theoretically exact dimensions (TED) is toleranced (Basic dimension is toleranced)	
20. Incomplete Toleranced Dimension	20d		1.4.2-1	No tolerance value is defined	
21. Incorrect Form Tolerance Type	21a		3.3.1-2	Tolerance symbol is not correct for Target shape element	
22. Incorrect Orientation Tolerance Type	22gi		3.3.2-2	Tolerance symbol is not correct for Target shape element	
23. Duplicate Datum Reference Frame	23		3.1.2-2	Datum references are duplicating	
24. Undefined Datum Reference Frame	24c		3.1.2-4	Referenced datum is not defined in model	
25. Missing Datum Reference Frame	25e		3.1.2-1	Datum reference is not defined	
26. Inappropriate Datum Reference Frame	26b		3.1.2-3	Inappropriate datum is referenced	
27. Zero Tolerance Value	27		1.4.2-2	Tolerance value is zero	
28. Inappropriate Material Condition	28f		3.4.4-1	Material condition is not correct for Target shape element	
29. Incorrect Tolerance Zone Type	29		3.4.1-1	Tolerance zone is not correct for Target shape element	
30 Missing Datum	30		3.1.2-4	Referenced datum is not defined in model	
31. Unacceptable Datum Label	31k		3.1.1-2	Datum label error (unacceptable character is used)	
32. Conflicting Tolerances	32e		1.11-1	Shape element has plural tolerance definitions, but with conflicting tolerance values	

Table 1-1
Correspondence of ISO and ANSI Draughting Standards: Dimensioning and dimensional tolerances (1/2)

ISO 129-1: 2004 Technical drawings -- Indication of dimensions and tolerances -- Part 1: General principles	Revision	ANSI Y 14.5-2009 Dimensioning and Tolerancing	Revision	Differences between ISO and ANSI
Type of dimensions		Units of measure (1.5)		
Linear dimension (3.3.3)		Linear units (1.5.1 to 1.5.4, Fig. 1-4 & 1-5)		
Angular dimension (3.3.4)		Angular units (1.5.5, Fig. 1-3)		
Elements of dimensioning (5)		Application of Dimensioning (1.7)		
Extension line (3.2.3, Figure 3), (5.4, Figure 4, 5), (7-9, Figure 13-19)	Changed from projection line	Extension (Projection) line (1.7.2)		ISO: permissible to have a gap between the feature and the bigining of the extension line (Figure 14) ANSI: start with a short visual gap from the outline of the part
Dimension line (3.2.2, Figure 3), (5.2, Figure 4-10)		Dimension line (1.7.1)		
Terminator (3.2.7, Figure 3), (5.3.2, Figure 11)		Between sysmbol (3.3.11, Fig. 3-11)		
Origin circle (3.2.6), (5.3.3, Figure 12)		Dimension origin (3.3.17, Fig. 3-11, Fig. 3-19)		
Leader line (3.2.4, Figure 3), (5.5, Figure 20, 25, 27)		Leader (Leader line) (1.7.4, Fig. 1-14)		
Reference line ((3.2.4), Figure 3, 25)				
Dimensional value (3.3.2, Figire 3, 5.6, Figure 21-24, Figure 25, 26)		Units of measure (1.5, Fig. 1-4, 1-5, 1-3)		Dimensional value to be placed pallalel to and at ISO: the middle of & slightly above the dimension line ANSI: the middle of & cutting the dimension line
Indication of tolerances (6)		Direct tolerancing (2.2)		
Limit deviations (6.2, Figure 28-31, 43-45)		Plus & minus tolerancing (2.2 (b), Fig. 2-2)		
Limits of dimensions (6.3, Figure 32, 33, 46)		Limit dimensioning (2.2 (a), Fig. 2-1)		
Symbols of the tolerance classes (6.1) (ISO 2768-1 & -2: General tolerancing)				
Statistical tolerances (6.1?)				
Indications of special dimensions (7)				
Symbols with dimensional values (7.1, Table A.1)		Symbology (3)		
Diameter (7.2, Figure 34, 39)		Diameter (1.8.1, Fig. 1-21, 3.3.7, Fig. 3-11)		
Radius (7.3, Figure 35, 40)		Radius (1.8.2, Fig. 1-22 to 25, Fig. 1-31, 1-32), (3.3.7, Fig. 3-11)		
Spherical diameter (7.4, Figure 38)		Spherical diameter (3.3.7, Fig. 3-11)		
Spherical radius (7.4, Figure 37)		Spherical radius (1.8.2.5, Fig. 1-27), (3.3.7, Fig. 3-11)		
		Controlled radius (3.3.7, Fig. 3-11)		"Controlled radius" is not defined in ISO 129-1
Arc (7.5, Figure 6, 41, 42)		Arc, Arc length (1.8.3, Fig. 1-28), (3.3.9, Fig. 3-11)		
Square(7.6, Figure 36)		Square (3.3.16, Fig. 3-11, Fig. 3-18)		
Thickness (Figure 36)				"Thickness" is not defiend in ANSI Y 14.5
Indication of levels (7.9, Figure 58, 59)				"Indication of levels" is not defiend in ANSI Y14.5
		Reference (1.7.6, Fig. 1-19, -20), (3.3.8, Fig. 3-11)		"Reference" is not degfoned in ISO 129-1
		Statistical tolerance ()		" Statistical tolerance" is not degfoned in ISO 129-1
		Continuous feature ()		"Continuous feature" is not degfoned in ISO 129-1
		Counterbore		"Counterbore" is not defined in ISO 129-1
		Countersink		"Countersink" is not defined in ISO 129-1
		Depth (3.1.15, Fig. 3-17)		"Depth" is not defined in ISO 129-1
		Spotface		"Spotface" is not defined in ISO 129-1
Equally spaced and repeated features (7.7, Figure 47-54)		Repetitive features & dimensions (1.9.5, Fig. 1-53 to 1-57)		
Symmetrical parts ((3.2.5), 7.8, Figure 55-57)				

Table 1-1
Correspondence of ISO and ANSI Draughting Standards: Dimensioning and dimensional tolerances (2/2)

ISO 129-1: 2004 Technical drawings -- Indication of dimensions and tolerances -- Part 1: General principles	Revision	ANSI Y 14.5-2009 Dimensioning and Tolerancing	Revision	Differences between ISO and ANSI
Arrangements of dimensions (8)				
Parallel dimensioning (3.4.3), (8.2, Figure 60)		(Fig. 1-7, Fig. 1-19,)		
Parallel dimensioning (3.4.3), (8.2, Figure 61)		Polar coordinate dimensioning (1.9.4, Fig. 1-52)		
Running dimensioning (3.4.4), (8.3, Figure 62-64)		Base line dimensioning (2.6 (b) Fig. 2-4 (b))		
Chain dimensioning (3.4.1), (8.4, Figure 65)		Chain dimensioning (2.6 (a) Fig. 2-4 (a))		
Combined dimensioning (8.6, Figure 71, 72)				
Coordimnate dimensioning (3.4.2), (8.5, Figure 66-70)		Rectangular coordinate dimensioning (1.9.1, 1.9.2, Fig. 1-49 to 1-50)		
Tablular dimensioning (3.4.5), (5.8, Figure 27)		Rectangular coordinate dimensioning -- Tabular dimensioning (1.9.3, Fig. 1-51)		

Table 1-2
Correspondence of ISO and ANSI Draughting Standards: General tolerances for linear and angular dimensions

2768-1: 1989 General tolerances -- Part 1: Tolerances for linear and angular dimensions without individual tolerance indications	Revision	ANSI Y 14.5-2009 Dimensioning and Tolerancing	Revision	Differences between ISO and ANSI

Table 1-3
Correspondence of ISO and ANSI Draughting Standards: Dimensioning and dimensional tolerances (2/2)

ISO 129-2: 2004 Technical drawings -- Indication of dimensions and tolerances -- Part 2: Mechanical engineering	Revision	ANSI Y 14.5-2009 Dimensioning and Tolerancing	Revision	Differences between ISO and ANSI

Table 2-1
Correspondence of ISO and ANSI Draughting Standards: Geometrical tolecances (1/2)

ISO 1101: 2004 Geometrical Product Specifications (GPS) -- Geometrical tolerancing -- Tolerancing of form, orientation, location and run-out	Revision	ANSI Y 14.5-2009 Dimensioning and Tolerancing	Revision	Differences between ISO and ANSI
Geometrical characteristics (5 Symbols, Table 1)		Geometrical characteristics (3 Symbology, Fig. 3-1)		
Form tolerance		Form tolerance		
Straightness (18.1, Figure 57-62)		Straightness (5.4.1, Fig. 5-1 to 5-6)		
Flatness (18.2, Figure 63, 64)		Flatness (5.4.2, Fig. 5-7 to 5-9)		
Roundness (18.3, Figure 65-67)		Circularity (Roundness) (5.4.3, Fig. 5-10, 5-11, 5-13)		
Cylindricity (18.4, Figure 68, 69)		Cylindricity (5.4.4, Fig. 5-12)		
		Profile tolerance		
Profile tolerance of a line (18.5, Figure 70, 71)		Profile tolerance of a line (8.2.1.2, Fig.)		
Prpofile tolerance of a surface (18.7, Figure 74, 75)		Prpofile tolerance of a surface (8.2.1.1, Fig.)		
Orientation tolerance		Orientation tolerance		
Parallelism tolerance (18.9, Figure 78-93)		Parallelism tolerance (6.3.2, Fig. 6-2, 6-9)		
Perpendicularity tolerance (18.10, Figure 94-105)		Perpendicularity tolerance (6.3.3, Fig. 6-3 to 6-5, Fig. 6-11, 6-12)		
Angularity tolerance (18.11, Figure 107-118)		Angularity tolerance (6.3.1, Fig. 6-1, 6-4, 6-6, 6-8)		
Profile tolerance of a line (18.6, Figure 72, 73)				
Prpofile tolerance of a surface (18.8)				
Location tolerance		Location tolerance		
Position tolerance (18.12, Figure 119-131)		Positional tolerance (7.2, Fig. 7-2), (7.3, Fig. 7-5, 7-10, Fig. 7-12, Fig 7-13 to 16, 7-18), (7.4, 7-19, 7-21, 7-22, Fig. 7-24 to 7-35), (7.5, Fig. 7-36 to 7-55)		
Concentricity tolerance (for center points) (18.13.1, Figure 132, 133)		Concentricity tolerance (for center points) (7.6.4, Fig.)		
Coaxiality tolerance (for axes) (18.13.2, Figure134-137)				
Symmetry tolerance (18.14, Figure 138-140)		Symmetry tolerance (7.7.2, Fig.)		
Profile tolerance of a line (18.6, Figure 72, 73)				
Prpofile tolerance of a surface (18.8, Figure 76, 77)				
Run-out tolerance		Run-out tolerance		
Circular run-out tolerance -- radial (18.15.1, Figure 141-146)		Circular run-out tolerance (9.4.1, Fig.)		
Circular run-out tolerance -- axiall (18.15.2, Figure 147-148)				
Circular run-out tolerance in any direction (18.15.3, Figure 149-151)				
Circular run-out tolerance in specified direction (18.15.4, Figure 152, 153)				
Total radial run-out tolerance (18.16.1, Figure 154, 155)		Total radial run-out tolerance (9.4.2, Fig.)		
Total axial run-out tolerance (18.16.2, Figure 156, 157)				

Table 2-1
Correspondence of ISO and ANSI Draughting Standards: Geometrical tolecances (1/2)

ISO 1101: 2004 Geometrical Product Specifications (GPS) -- Geometrical tolerancing -- Tolerancing of form, orientation, location and run-out	Revision	ANSI Y 14.5-2009 Dimensioning and Tolerancing	Revision	Differences between ISO and ANSI
Tolerancing condition (5 Symbols, Table 2)		Tolerancing condition (3 Symbology)		
Datums (9, Figure 27-37)		Datums (3.3.2, 3.3.3, Fig. 3-2, 3-3)		
Theoretically exact dimensions (TED) (11, Figure 20, Figure 42, 43)		Basic Dimension Symbol (3.3.4, Fig. 3-9, 3-10)		Symbology is same but Term is different
Tolerancing condition (5 Symbols, Table 2)		Tolerancing condition (3 Symbology, Fig. 3-11)		
Profile condition				
Minor daiameter (10.2, Figure 41)				
Major diameter (10.2, Figure 40)				
Pitch daiameter (10.2)				
Line element (18.9.4)				
Not convex (6.3, Figure 8)				
All round (profile) (10.1, Figure 3-39)		All round (3.3.19, Fig. 3-20)		
		All over (3.3.25, Fig. 3-20)		"All over" is not defined in ISO 129-1
Envelop requirement (ISO 8015)				
Any cross-section (18.13.1)				
		Tangent plane ()		"Tangent plane" is not defined in ISO 129-1
Free state condition (non-rigid parts) (16, Figure 54-56, ISO 10579)		Free state condition (3.3.20, Fig. 3-2), (5.5, Fig. 5-13, 5-14)		
		Unequally disposed profile		"Unequally disposed profile" is not defined in ISO 129-1
		Translation		"Translation" is not defined in ISO 129-1
Tolerance zones (3.1, 8.1, Figure 16-19)		Tolerance zones (3.1, 8.1, Figure 16-19)		
Commom zone (8.5, Figure 26)				
Projected tolerance zone (13, Figure 47, ISO 10578)		Projected tolerance zone (3.3.6), (7.4.1, Fig. 7-21, 7-22)		
Material condition		Material condition		
Maximum material requirement (14, Figure 48-50, ISO 2692)		At maximum material condition (3.3.5), (8.5, Fig. 4-5, 4-31, 4-39, 7-55, 7-56)		
		At maximum material boundary (3.3.5, Fig. 4-5,)		"At maximum material boundary" is not defined in ISO 129-1
Least material requirement (15, Figure 51-53, ISO 2692)		At least material condition (3.3.5, Fig.)		
		At least material boundary (3.3.5, Fig.)		"At least material boundary" is not defined in ISO 129-1
Tolerance frame (6, Figure 1-9)		Tolerance frame (6, Figure 1-9)		
Toleranced features (7, Figure 13-15)		Toleranced features (7, Figure 13-15)		
Restrictive specifications (12, Figure 44-46)				

Table 2-2
Correspondence of ISO and ANSI Draughting Standards: General tolerances for Geometrical tolerances

2768-2: 1989 General tolerances -- Part 2: Geometrical tolerances for features without individual tolerance indications	Revision	ANSI Y 14.5-2009 Dimensioning and Tolerancing	Revision	Differences between ISO and ANSI

PDQ国際標準化開発委員会へのご意見

2011-2-16 JAMA/JAPIA　PDQタスク

	国際規格開発			普及展開	
	Quality standard	Quality specification	Quality report	実装	PR
Geometry	・実装に難色を示しているクライテリアについて、ベンダーと意見交換をして解決を図ってください	・全てのPDQ項目を記述できる ・個別事項も記載可能（運用に関する特記など） ・これに基づいてQuality reportに出力できる ・PDQツールのチェックプロファイルとして利用可能な形式 ・XML表現	・データ変換の前後で、正確に再現しているかをチェックできる仕組みを盛り込めないか	・標準に合致しているかを検証できるデータの用意と配布 ・ベンダーを巻き込んだラウンドテーブルの実施	・啓蒙のために、セミナー、文献等にて、年に1回は、進捗含めて発表願いたい ・AP242の開発にに合わせてSTEPの更なる普及展開活動を期待 ・業界横断的な普及展開に役立つようなプロジェクト企画を期待（長期保存）
Non geometry	・SASIG PDQ Guidelinesの項目は全部対応してください				
離散データ（CAEメッシュ、測定データ）					
3D+2D annotation +FF,PP,SC	品質定義の要件ﾚﾍﾞﾙ ①設計意図が正確に伝達（誤認識しない） ②設計での再利用 ③後工程でﾃﾞｰﾀ活用 最低でもﾚﾍﾞﾙ②を目指して欲しい				

PDQ specificationの運用案

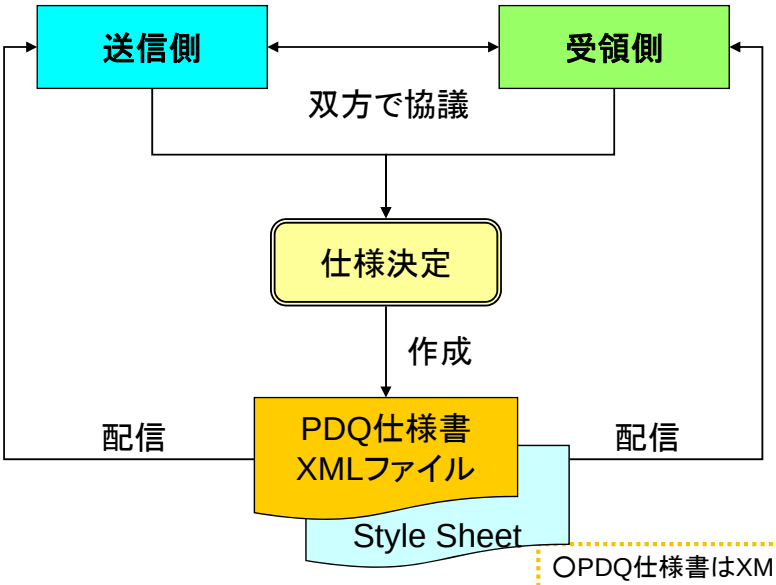

○PDQ仕様書はXMLフォーマットで作成

○ PDQ仕様書用のStyle Sheetを事前に作成・配布または公開（各種言語対応）（ENGDAT Packageに含んで送信しても可）

○ PDQ仕様書は、そのままCADもしくはチェックツールに取り込みチェックが出来る構造

Quality reportの運用案（ENGDAT V3?での流通）

【出力例】

①PDQ仕様書に従ったチェックを実行

②チェック結果をQuality reportに出力
（またはCADファイル内部に埋め込み）

③CADデータとQuality reportを同じ
ENGDAT Packageに入れ送信
（ PDQ仕様書を含むことも可？）

【利用例】

〇Quality report Viewerまたは、Style Sheetで、データ品質を確認
（Viewer、Style Sheetは事前に入手
または、ENGDAT Packageで送信

〇PDMシステムに自動取り込み

〇Healing Toolに取り込み修正を実行

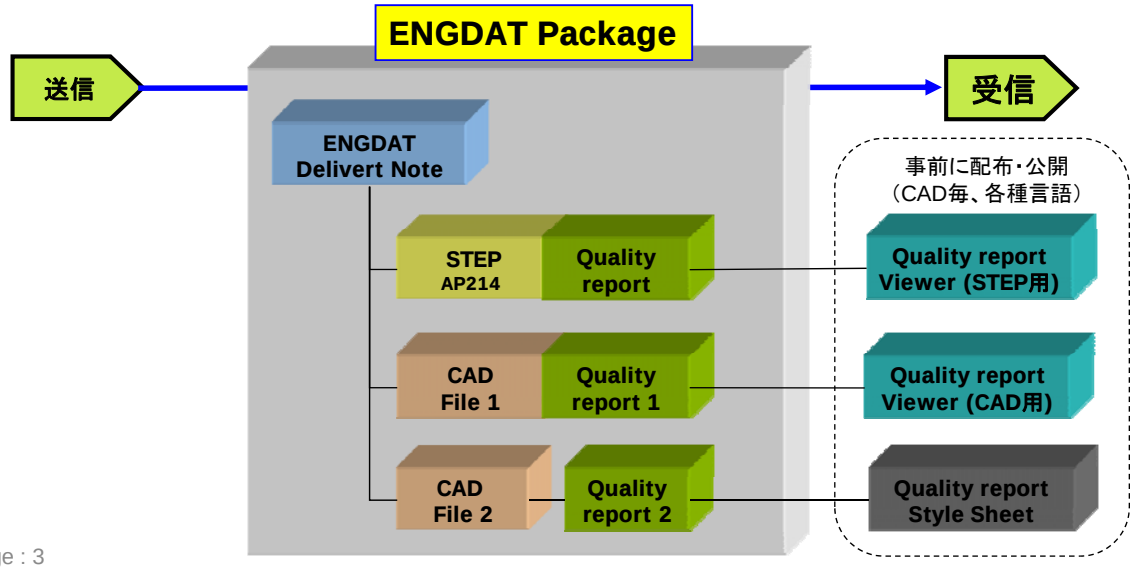

禁　無　断　転　載

平成２３年３月発行

発行所　財団法人　日本情報処理開発協会

東京都港区芝公園３－５－８
機械振興会館内
ＴＥＬ　０３（３４３６）７５００

印刷所　昭和情報プロセス株式会社

東京都港区三田５－１４－３
ＴＥＬ　０３（３４５２）８４５１

22-H012

（裏表紙）